REQUIRED CONCRETE BEARING AREA (SQUARE FEET – SF)

NOM. DIA. (INCHES)	180 TEE, PLUG	90 BEND	45 BEND	22.5 BEND	11.25 BEND
6	4.7	6.7	4.0	4.0	4.0
8	8.4	11.8	6.4	4.0	4.0
10	13.1	18.5	10.0	5.1	4.0
12	18.8	26.7	14.4	7.4	4.0
14	25.7	36.3	19.6	10.0	5.0
16	33.5	47.4	25.6	13.1	6.6
18	42.4	REST. JT.	32.5	16.5	8.3
20	REST. JT.	REST. JT.	40.1	20.4	10.3
24	REST. JT.	REST. JT.	REST. JT.	29.4	14.8

NOTES:

1. ALL BENDS WITHOUT RESTRAINED JOINTS SHALL HAVE CONCRETE THRUST BLOCKS INSTALLED FOR RESTRAINT.
2. MEGA LUGS MAY BE USED ONLY IN CONJUNCTION WITH CONCRETE THRUST BLOCKING.
3. BEARING AREA MUST BE AGAINST UNDISTURBED SOIL.
4. DO NOT COVER JOINTS OR BOLTS (WHERE APPLICABLE) WITH CONCRETE.

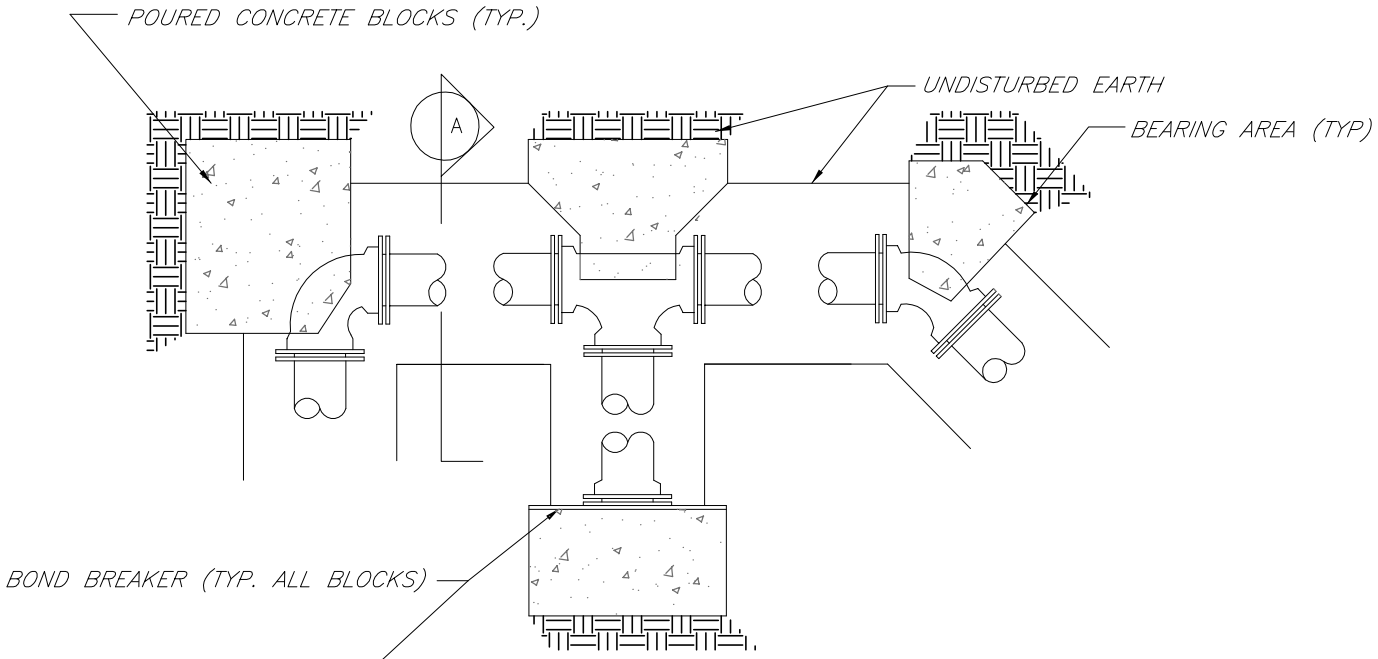

PLAN

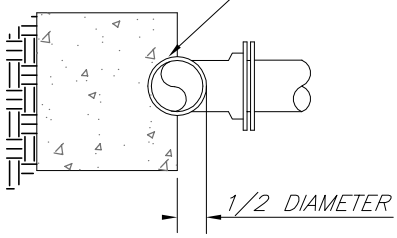

SECTION A

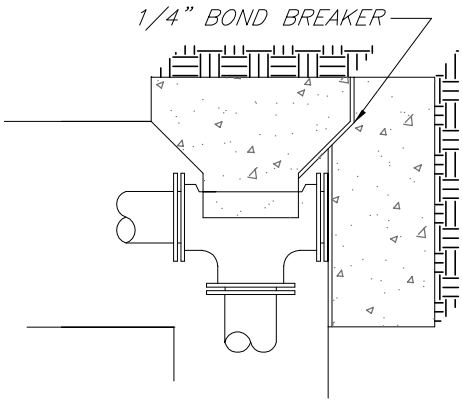

LS	LEE'S SUMMIT MISSOURI PUBLIC WORKS ENGINEERING DIVISION | 220 SE GREEN STREET | LEE'S SUMMIT, MO 64063	Date: 02/13
		Drawn By: JN
		Checked By: DL
		FILE: WAT–1
	HORIZONTAL THRUST BLOCKS	Rev: 1/14
		Rev:

REQUIRED CONCRETE VOLUME (CUBIC FEET – CF)

NOM. DIA. (INCHES)	180 TEE, PLUG	90 BEND	45 BEND	22.5 BEND	11.25 BEND
6	50.5	71.4	38.6	19.7	9.9
8	89.8	126.9	68.7	35.0	17.6
10	140.2	198.3	107.3	54.7	27.5
12	202.0	REST. JT.	154.6	78.8	39.6
14	REST. JT.	REST. JT.	210.4	107.3	53.9
16	REST. JT.	REST. JT.	REST. JT.	140.1	70.4
18	REST. JT.	REST. JT.	REST. JT.	177.3	89.1
20	REST. JT.	REST. JT.	REST. JT.	REST. JT.	110.0
24	REST. JT.	REST. JT.	REST. JT.	REST. JT.	158.4

NOTES:

1. ALL BENDS WITHOUT RESTRAINED JOINTS SHALL HAVE CONCRETE THRUST BLOCKS INSTALLED FOR RESTRAINT.
2. MEGA LUGS MAY BE USED ONLY IN CONJUNCTION WITH CONCRETE THRUST BLOCKING.
3. BEARING MUST BE AGAINST UNDISTURBED SOIL.
4. DO NOT COVER JOINTS OR BOLTS (WHERE APPLICABLE) WITH CONCRETE.

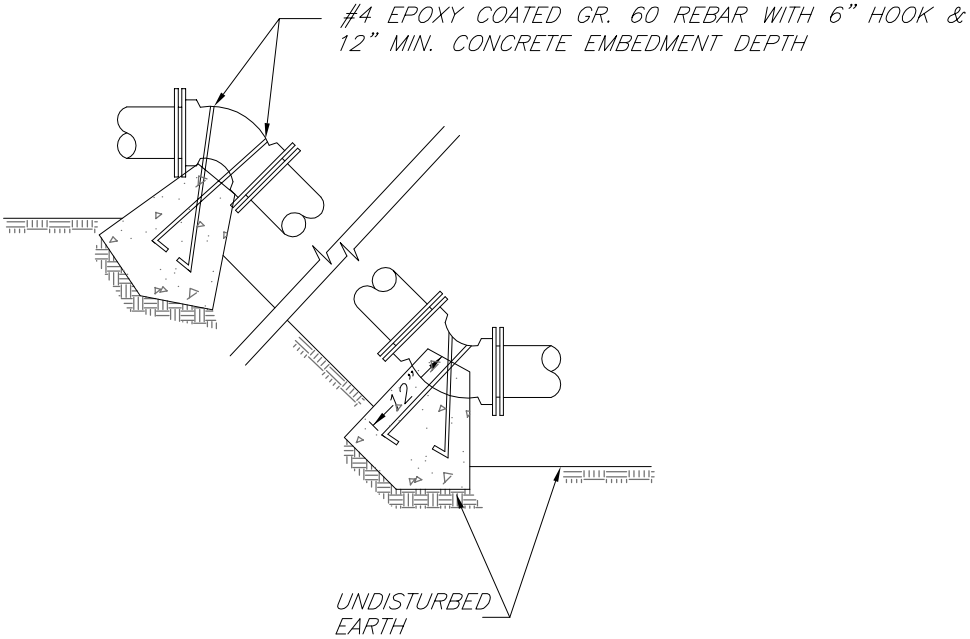

LEE'S SUMMIT
MISSOURI
PUBLIC WORKS ENGINEERING DIVISION | 220 SE GREEN STREET | LEE'S SUMMIT, MO 64063

VERTICAL THRUST BLOCKS

Date: 02/13
Drawn By: JN
Checked By: DL
FILE: WAT–2
Rev: 1/14
Rev:

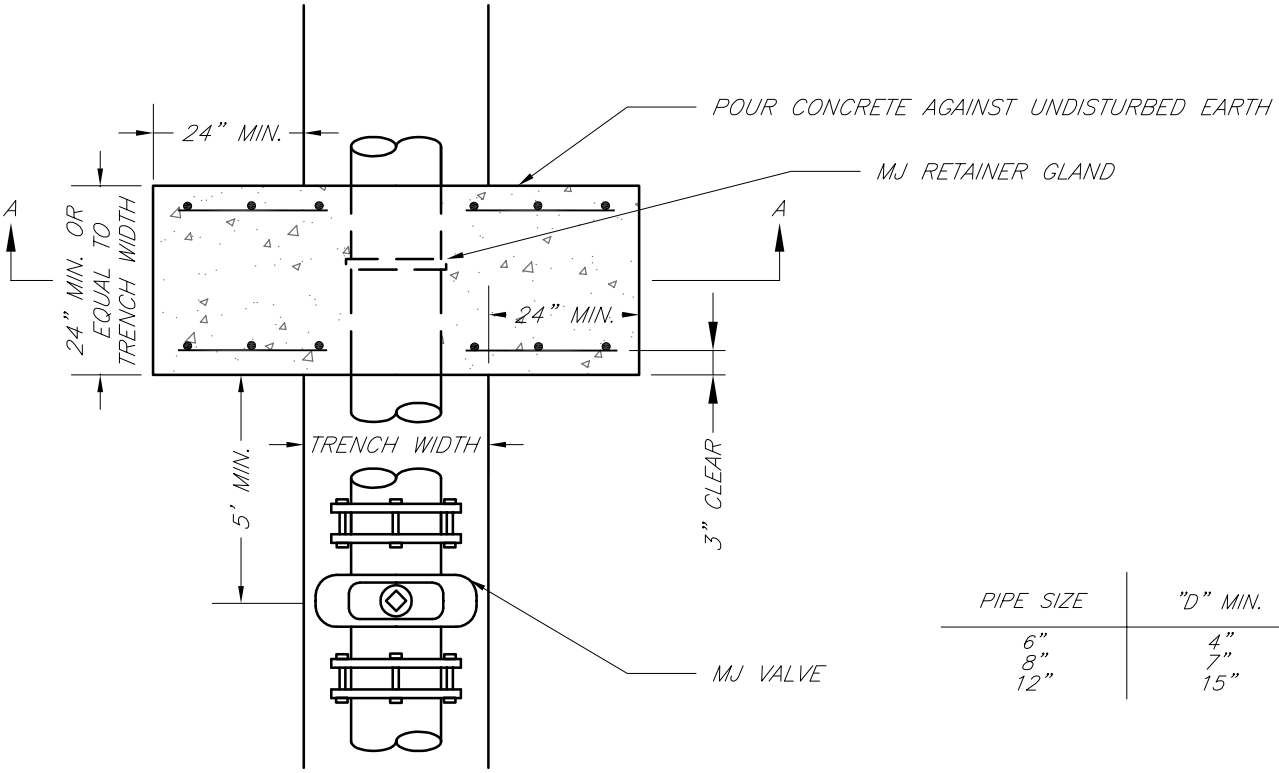

PIPE SIZE	"D" MIN.
6"	4"
8"	7"
12"	15"

TOP VIEW

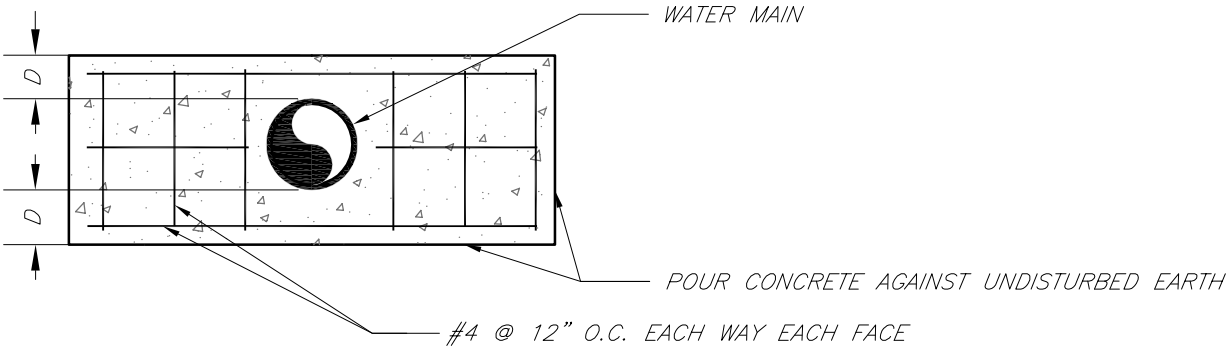

SECTION A

NOTE:

THIS DETAIL NOT TO BE USED FOR PIPE GREATER THAN 12"

LEE'S SUMMIT
MISSOURI
PUBLIC WORKS ENGINEERING DIVISION | 220 SE GREEN STREET | LEE'S SUMMIT, MO 64063

STRADDLE BLOCK

Date:	02/13
Drawn By:	JN
Checked By:	DL
FILE:	WAT-3
Rev:	1/14
Rev:	

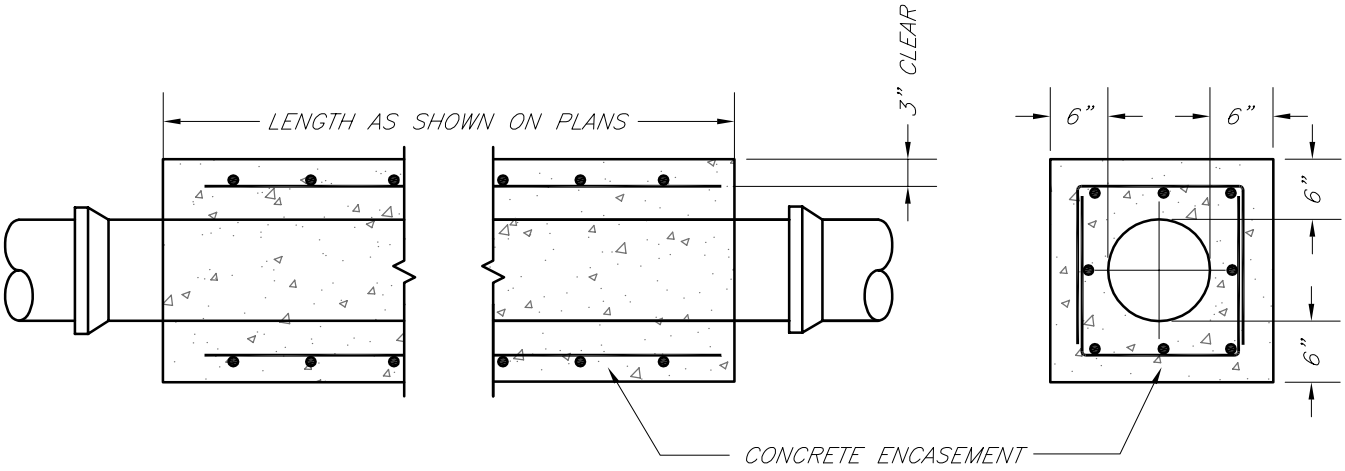

NOTES:

1. INTERMEDIATE BELLS SHALL BE ENCASED.
2. REINFORCING STEEL SHALL BE #4 @ 12" O.C. EACH WAY WITH A MINIMUM REBAR LAP OF 12".
3. THIS DETAIL IS FOR PIPES 12" AND SMALLER.

LS	LEE'S SUMMIT MISSOURI PUBLIC WORKS ENGINEERING DIVISION | 220 SE GREEN STREET | LEE'S SUMMIT, MO 64063	Date: 02/13 Drawn By: JN Checked By: DL FILE: WAT-4
	WATER PIPE ENCASEMENT	Rev: 1/14 Rev:

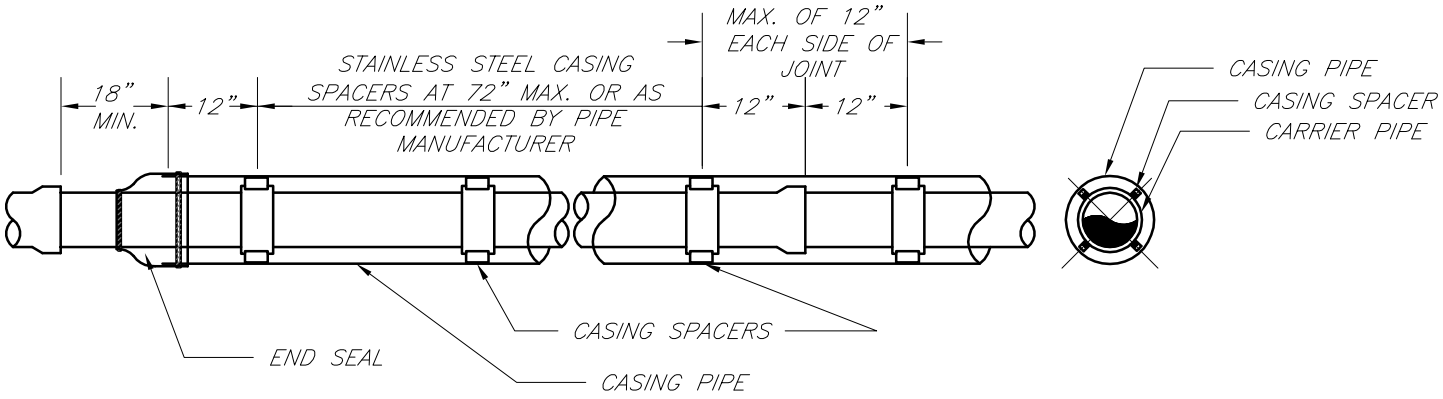

NOT TO SCALE

NOTES:

1. REFER TO SPECIFICATION SECTION 3900 FOR ADDITIONAL INFORMATION.
2. LENGTH, DIAMETER, AND WALL THICKNESS TO BE SHOWN ON CONSTRUCTION PLANS.

LS	LEE'S SUMMIT MISSOURI PUBLIC WORKS ENGINEERING DIVISION | 220 SE GREEN STREET | LEE'S SUMMIT, MO 64063	Date: 02/13
		Drawn By: JN
		Checked By: DL
		FILE: WAT–5
	WATER CASING PIPE DETAIL	Rev: 1/14
		Rev:

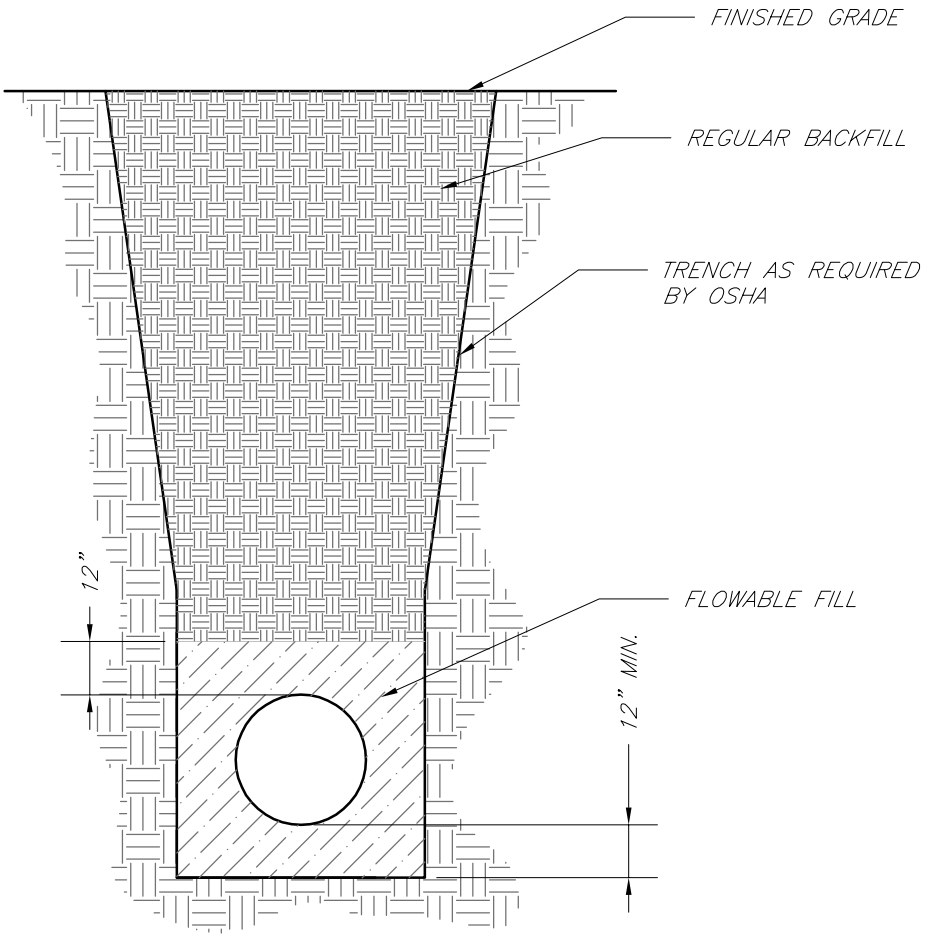

NOT TO SCALE

NOTES:

1. FLOWABLE FILL SHALL MEET THE REQUIREMENTS OF THE CITY OF LEE'S SUMMIT DESIGN AND CONSTRUCTION MANUAL.
2. REGULAR BACKFILL ABOVE THE TRENCH CHECK SHALL BE FREE OF DEBRIS, ORGANIC MATTER, AND STONES > 6" IN ANY DIMENSION.
3. TOP OF FLOWABLE BACKFILL SHALL EXTEND 12" ABOVE THE TOP OF THE PIPE.
4. LENGTH OF TRENCH CHECK SHALL BE A MINIMUM OF 12".

LS	LEE'S SUMMIT MISSOURI PUBLIC WORKS ENGINEERING DIVISION | 220 SE GREEN STREET | LEE'S SUMMIT, MO 64063	Date: 02/13
		Drawn By: JN
		Checked By: DL
		FILE: WAT–6
	TRENCH CHECK	Rev: 1/14
		Rev:

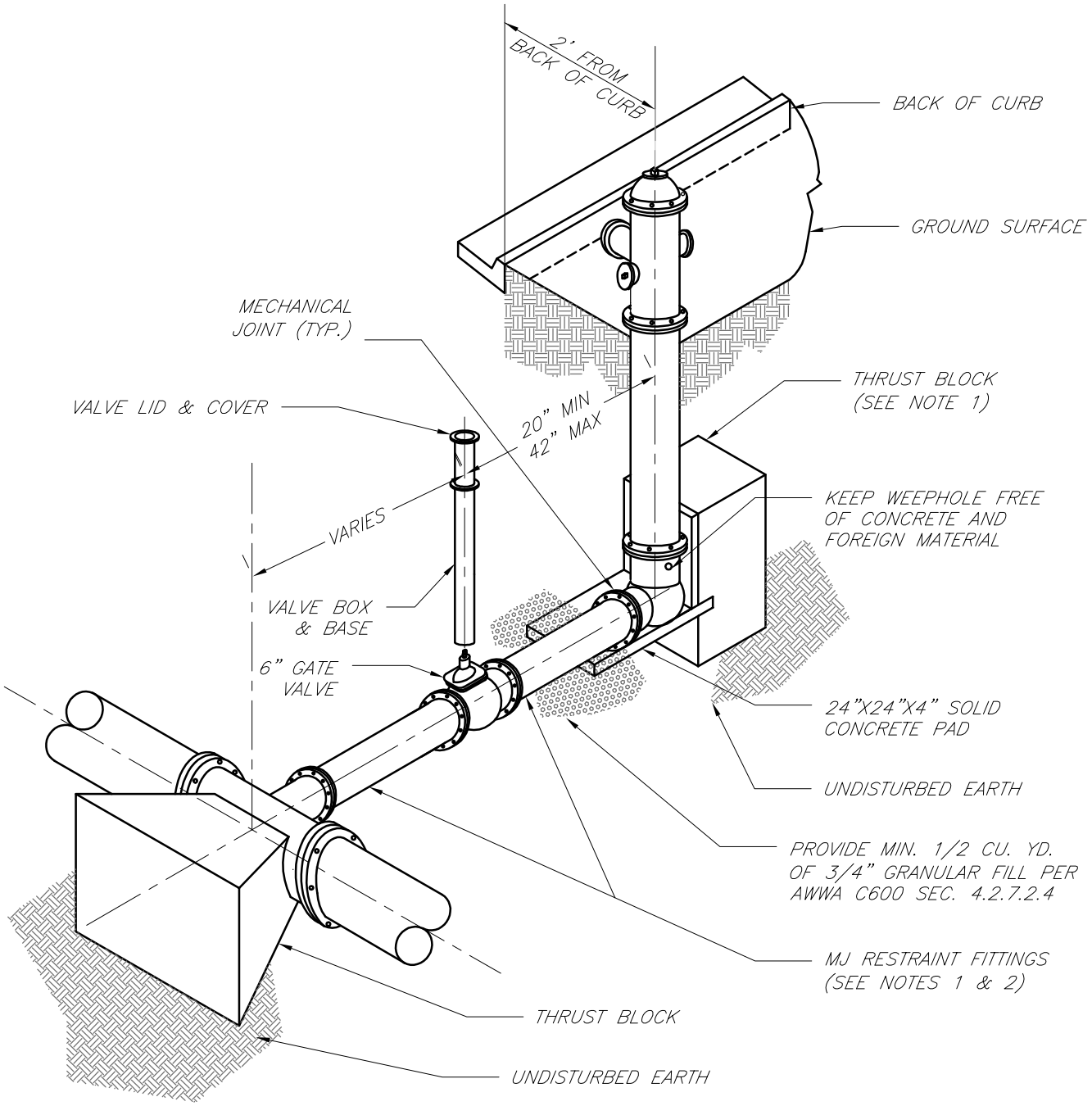

NOTES:

1. WHEN RETAINER GLANDS ARE USED IN LIEU OF MECHANICAL JOINT (MJ) RESTRAINT FITTINGS, HORIZONTAL THRUST BLOCKS ARE REQUIRED.
2. GATE VALVE MAY BE BOLTED DIRECTLY TO MJ RESTRAINT TEE.
3. SEE APPROVED PRODUCTS LIST FOR WATER UTILITIES FOR FIRE HYDRANT, VALVES, VALVE BOX LID, AND COVER.
4. BOTTOM HYDRANT FLANGE SHALL BE 2" TO 6" ABOVE FINISHED GRADE.
5. FOR STREETS WITHOUT CURBS FIRE HYDRANTS SHALL BE PLACED WITHIN 1 FOOT OF THE R/W LINE, BUT NOT MORE THAN 10' FROM EDGE OF PAVEMENT. FIRE HYDRANT SHALL NOT BE PLACED IN BOTTOM OF DITCH.
6. HYDRANT SHALL BE ROTATED AS DIRECTED BY INSPECTOR.

LS	LEE'S SUMMIT MISSOURI PUBLIC WORKS ENGINEERING DIVISION | 220 SE GREEN STREET | LEE'S SUMMIT, MO 64063	Date: 02/13
		Drawn By: JN
		Checked By: DL
		FILE: WAT-7
	HYDRANT INSTALLATION – STRAIGHT SET	Rev: 1/14
		Rev:

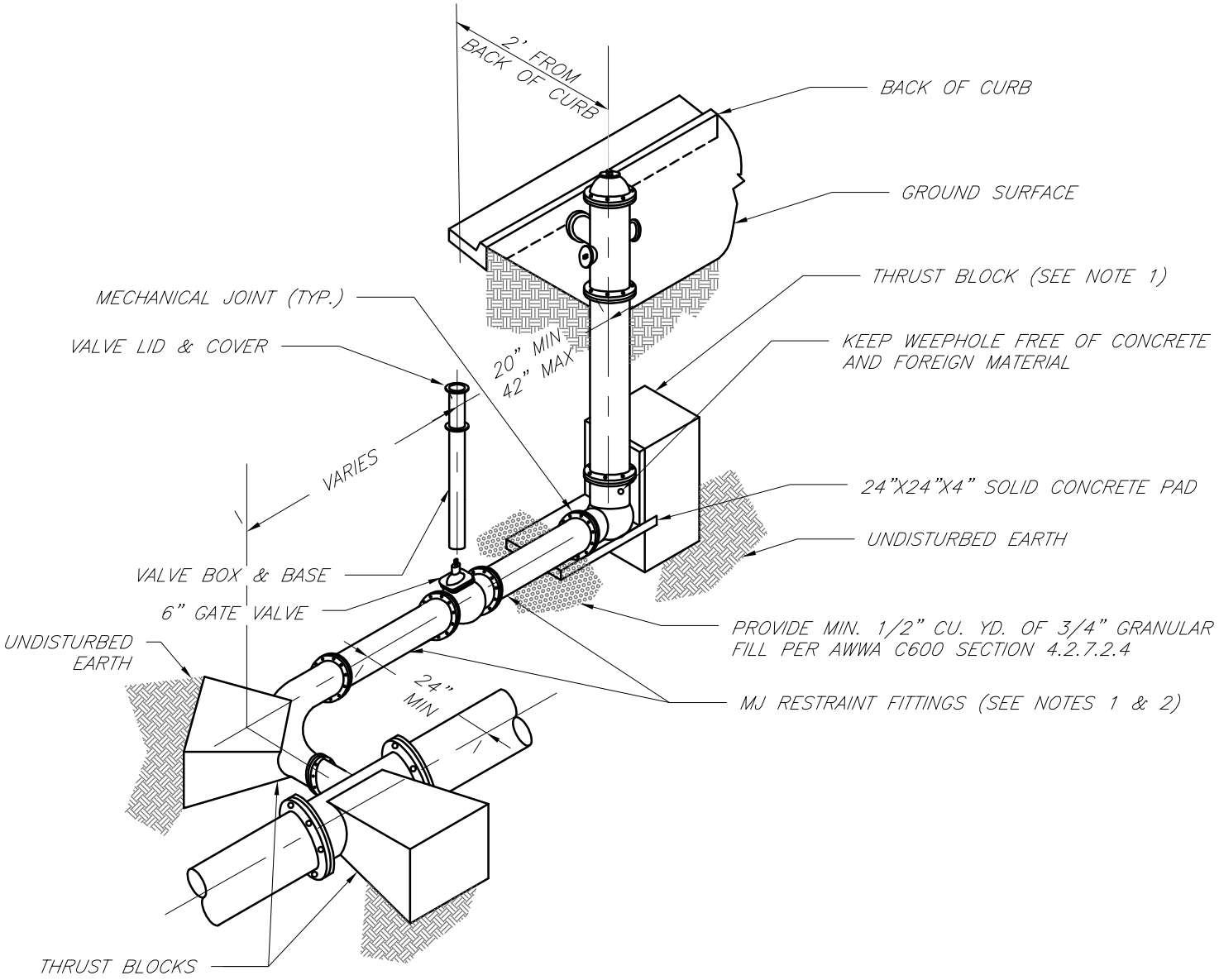

NOTES:

1. WHEN RETAINER GLANDS ARE USED IN LIEU OF MECHANICAL JOINT (MJ) RESTRAINT FITTINGS, HORIZONTAL THRUST BLOCKS ARE REQUIRED.
2. GATE VALVE MAY BE BOLTED DIRECTLY TO MJ RESTRAINT TEE.
3. SEE APPROVED PRODUCTS LIST FOR WATER UTILITIES FOR FIRE HYDRANT, VALVES, VALVE BOX LID, AND COVER.
4. BOTTOM HYDRANT FLANGE SHALL BE 2" TO 6" ABOVE FINISHED GRADE.
5. FOR STREETS WITHOUT CURBS FIRE HYDRANTS SHALL BE PLACED WITHIN 1 FOOT OF THE R/W LINE, BUT NOT MORE THAN 10' FROM EDGE OF PAVEMENT. FIRE HYDRANT SHALL NOT BE PLACED IN BOTTOM OF DITCH.
6. HYDRANT SHALL BE ROTATED AS DIRECTED BY INSPECTOR.

LS	LEE'S SUMMIT MISSOURI PUBLIC WORKS ENGINEERING DIVISION | 220 SE GREEN STREET | LEE'S SUMMIT, MO 64063	Date: 02/13 Drawn By: JN Checked By: DL FILE: WAT-8
	HYDRANT WITH 90 DEGREE BEND	Rev: 1/14 Rev:

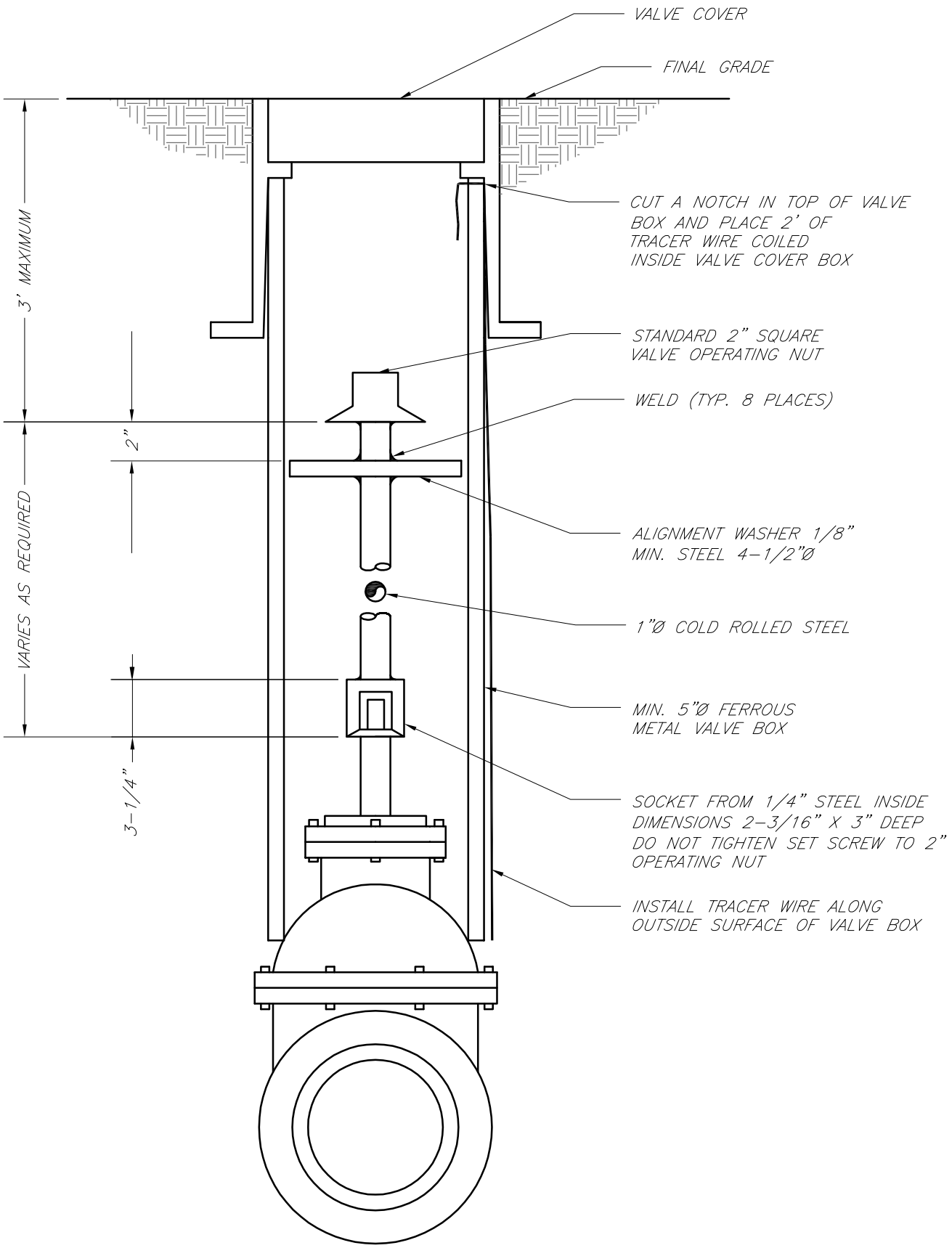

LEE'S SUMMIT
MISSOURI
PUBLIC WORKS ENGINEERING DIVISION | 220 SE GREEN STREET | LEE'S SUMMIT, MO 64063

VALVE STEM EXTENSION AND VALVE BOX

Date: 02/13	
Drawn By: JN	
Checked By: DL	
FILE: WAT-9	
Rev: 1/14	
Rev:	

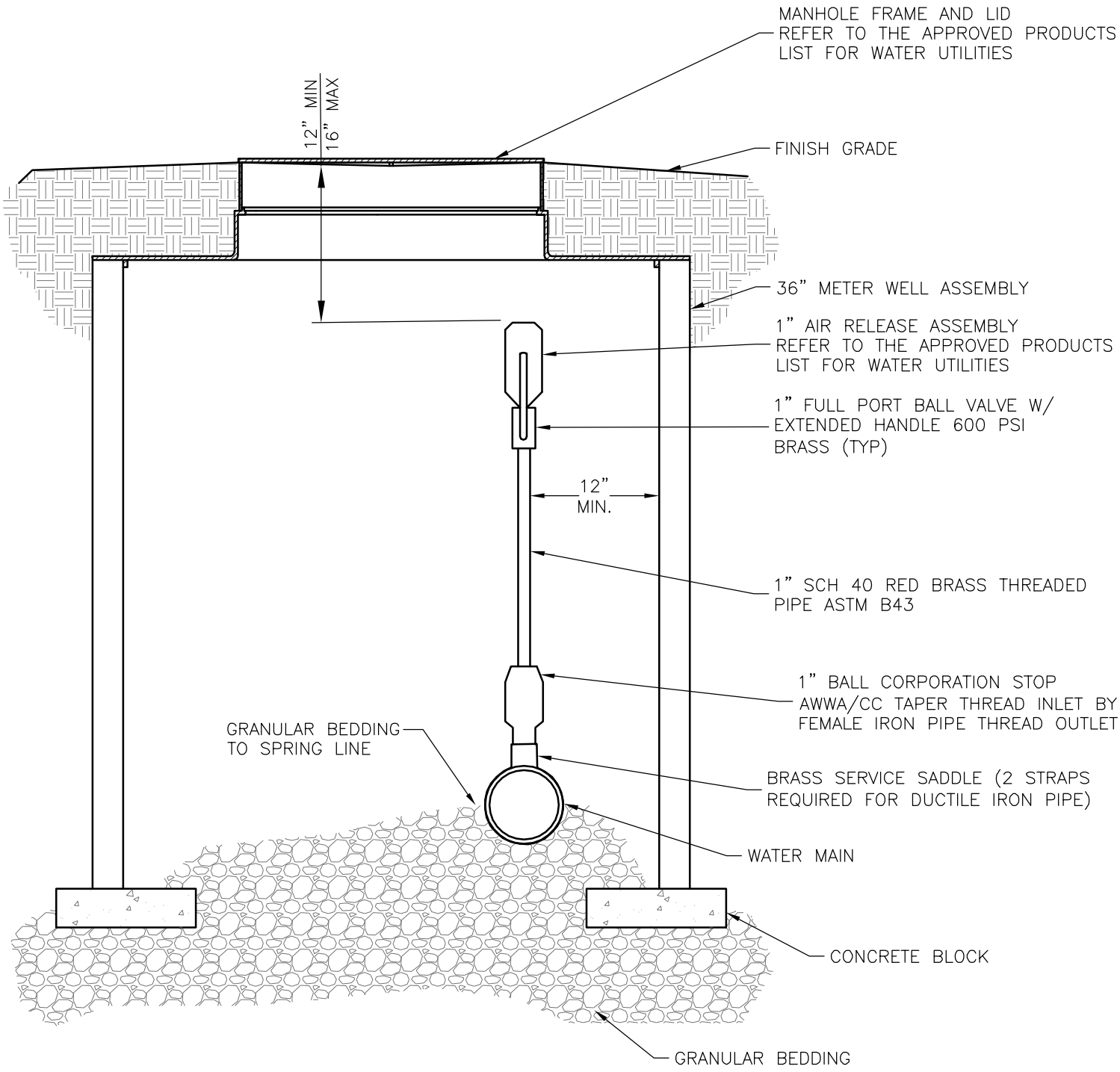

AIR RELEASE ASSEMBLY

NOT TO SCALE

LS	**LEE'S SUMMIT** MISSOURI PUBLIC WORKS ENGINEERING DIVISION | 220 SE GREEN STREET | LEE'S SUMMIT, MO 64063	Date: 04/17 Drawn By: MJF Checked By: DL
	AIR RELEASE ASSEMBLY	WAT-10

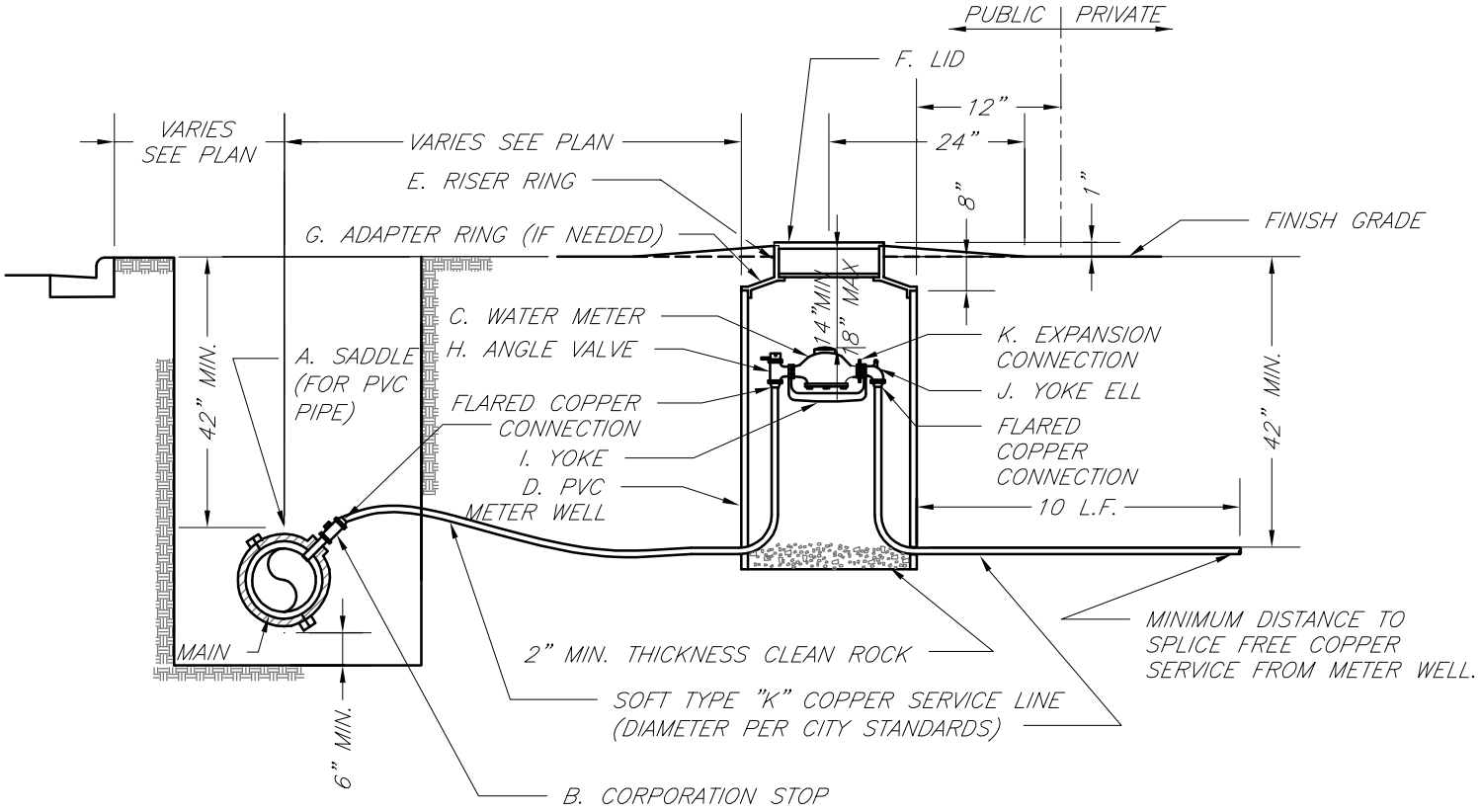

TYPICAL METER INSTALLATION – 2" AND SMALLER
NOT TO SCALE

NOTES:

1. METER INSTALLATION SHALL NOT BE LOCATED IN AREAS SUBJECT TO VEHICULAR TRAFFIC OR IN CONCRETE PAVEMENT WITHOUT CITY APPROVAL.
2. IF METER IS TO BE LOCATED OTHER THAN IN FRONT OF PROPERTY LINE, CITY APPROVAL SHALL BE OBTAINED.
3. CITY TO FURNISH ITEMS A–K.
4. NO OTHER EQUIPMENT SHALL BE INSTALLED IN THIS PIT.
5. 42" MINIMUM BURY DEPTH FOR ALL SERVICE LINES.
6. EXCAVATION FOR TAP TO EXPOSE 4 LINEAR FEET OF MAIN.
7. NO SPLICES ALLOWED BETWEEN METER AND MAIN.
8. SERVICE CONNECTION TAP AT APPROXIMATELY 45 DEGREES.
9. LID AND RISER RING SHALL BE SET SO THAT GROUND WATER WILL DRAIN AWAY FROM THE WELL.
10. CONTACT WATER UTILITIES, 816–969–1900, FOR REQUIREMENTS OF A METER LARGER THAN 2"

LS	LEE'S SUMMIT MISSOURI PUBLIC WORKS ENGINEERING DIVISION | 220 SE GREEN STREET | LEE'S SUMMIT, MO 64063	Date: 02/13
		Drawn By: JN
		Checked By: DL
		FILE: WAT–11
	SERVICE CONNECTION/METER WELL	Rev: 1/14
		Rev:

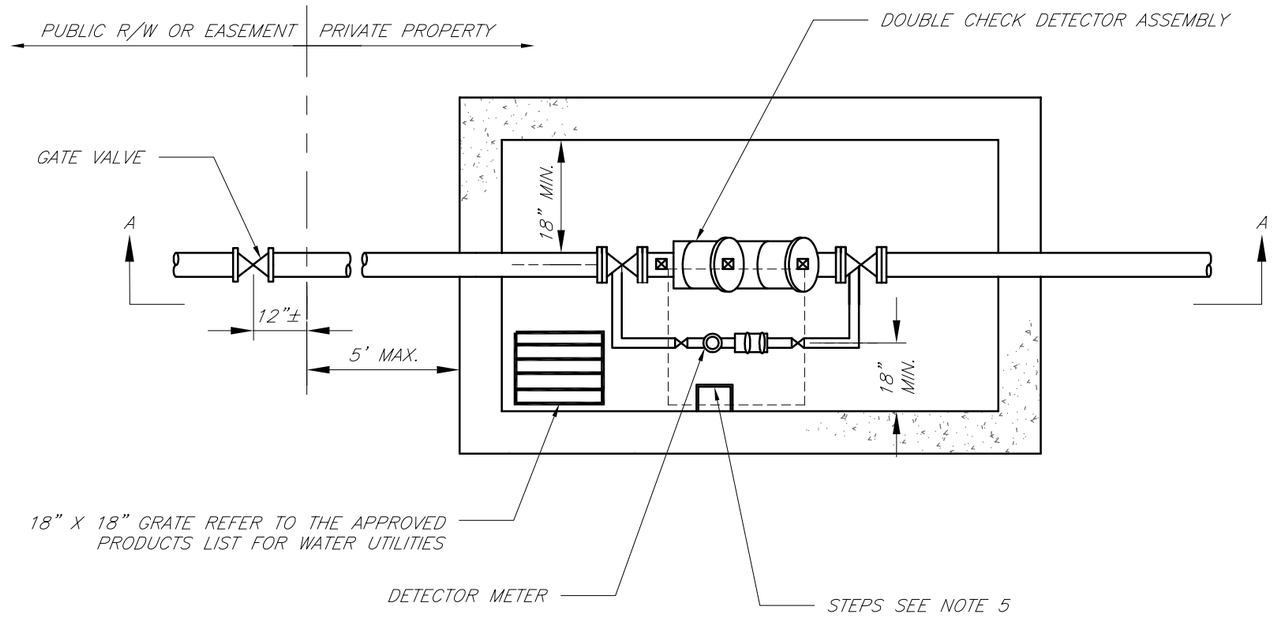

PLAN VIEW
NOT TO SCALE

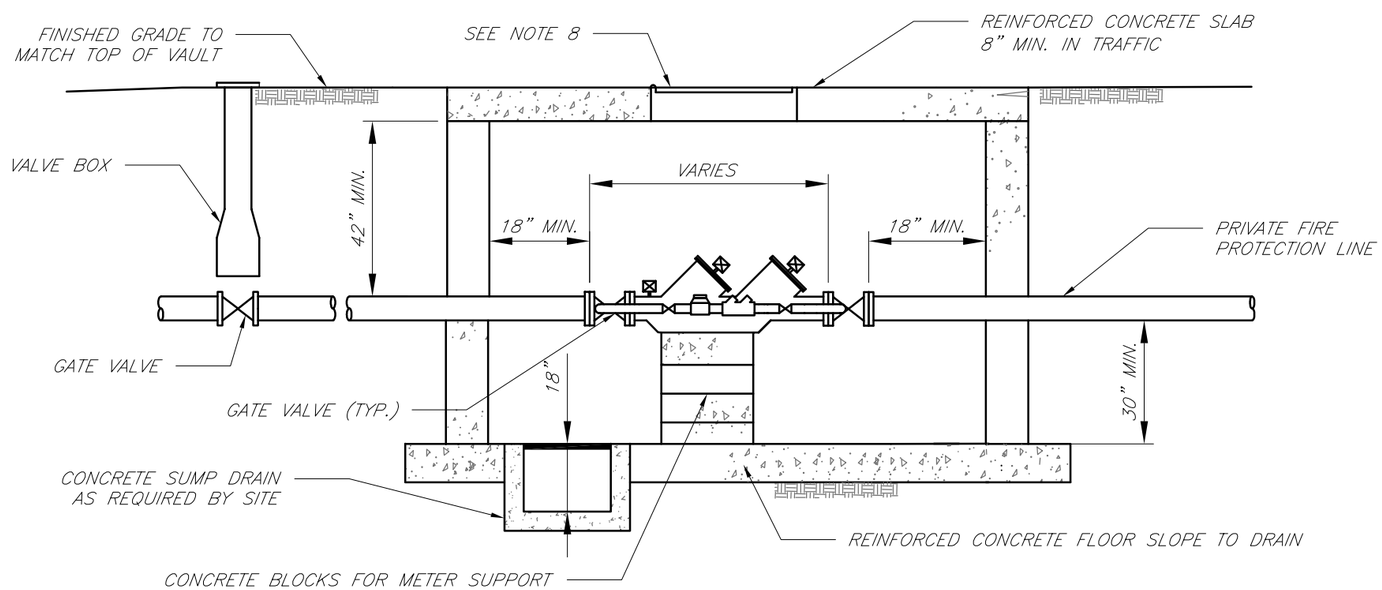

SECTION A–A
NOT TO SCALE

GENERAL NOTES:

1. METER VAULT WALLS TO BE POURED OR PRECAST CONCRETE. METER VAULT ROOF TO BE REINFORCED CONCRETE WITH OPENING CENTERED OVER DETECTOR METER. REINFORCED WALLS AND SLABS ARE TO BE DESIGNED BY THE OWNER'S ENGINEER OR PRECAST ENGINEER.
2. METER VAULT TO BE LOCATED, WHEN POSSIBLE, OUTSIDE TRAFFIC AREA AND WHERE SURFACE WATER WILL NOT DRAIN INTO IT. PROVIDE CONCRETE SUMP TO DRAIN TO AN ABOVE GROUND DISCHARGE POINT.
3. ALL PIPE AND FITTINGS FROM THE CITY WATER MAIN THROUGH THE VAULT SHALL BE PROVIDED WITH RESTRAINED JOINT FITTINGS.
4. ALL FITTINGS FOR THE DETECTOR METER TO BE BRASS.
5. STEPS SHALL BE IN ACCORDANCE WITH THE APPROVED PRODUCTS LIST FOR WATER UTILITIES AND SHALL BE ON 16" CENTERS.
6. A DEPARTMENT OF NATURAL RESOURCES APPROVED DOUBLE CHECK DETECTOR ASSEMBLY BACKFLOW PREVENTER MUST BE USED. FOR A COPY OF THE MISSOURI DEPARTMENT OF NATURAL RESOURCES APPROVED BACKFLOW PREVENTION ASSEMBLIES, CONTACT WATER UTILITIES AT 816–969–1900.
7. ALL VALVES SHALL HAVE RISING STEMS.
8. MANHOLE COVER SHALL BE A BILCO K–1 MODEL UNLESS IN A VEHICLE TRAFFIC AREA. SEE THE APPROVED PRODUCTS LIST FOR WATER UTILITIES FOR TRAFFIC CONDITIONS. THE COVER SHALL HAVE A 1–3/4" ø HOLE DRILLED FOR A TOUCH/READ DEVICE.
9. A MINIMUM OF 18" CLEARANCE SHALL BE PROVIDED AROUND ALL PIPING, VALVES, APPURTENANCES, ETC.
10. CONTACT PUBLIC WORKS ENGINEERING FOR VAULTS THAT INCLUDE A FIRE DEPARTMENT CONNECTION OR A 3" OR LARGER METER.

CITY OF LEE'S SUMMIT, MO
PUBLIC WORKS DEPARTMENT
ENGINEERING DIVISION
220 SE GREEN STREET
LEE'S SUMMIT, MO 64063

Project: STANDARD DRAWINGS

Sheet Name: VAULT FOR DOUBLE CHECK DETECTOR CHECK

Drawn By: .AS
Checked By: .DL
Date: 1/14
Rev: 1/14

OF

WAT–12