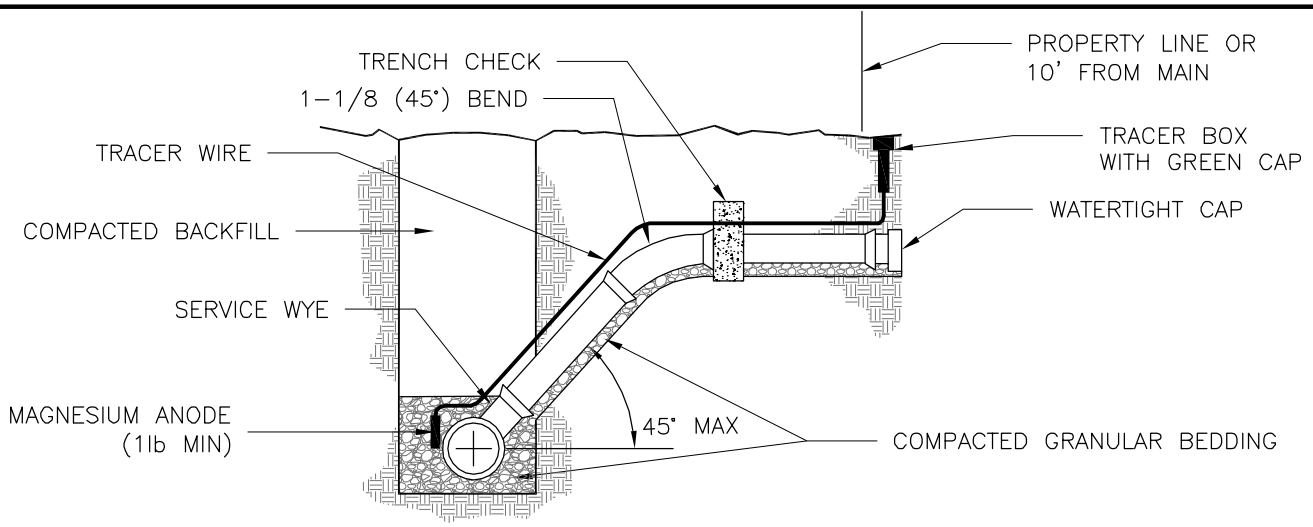

STANDARD INSTALLATION
NOT TO SCALE

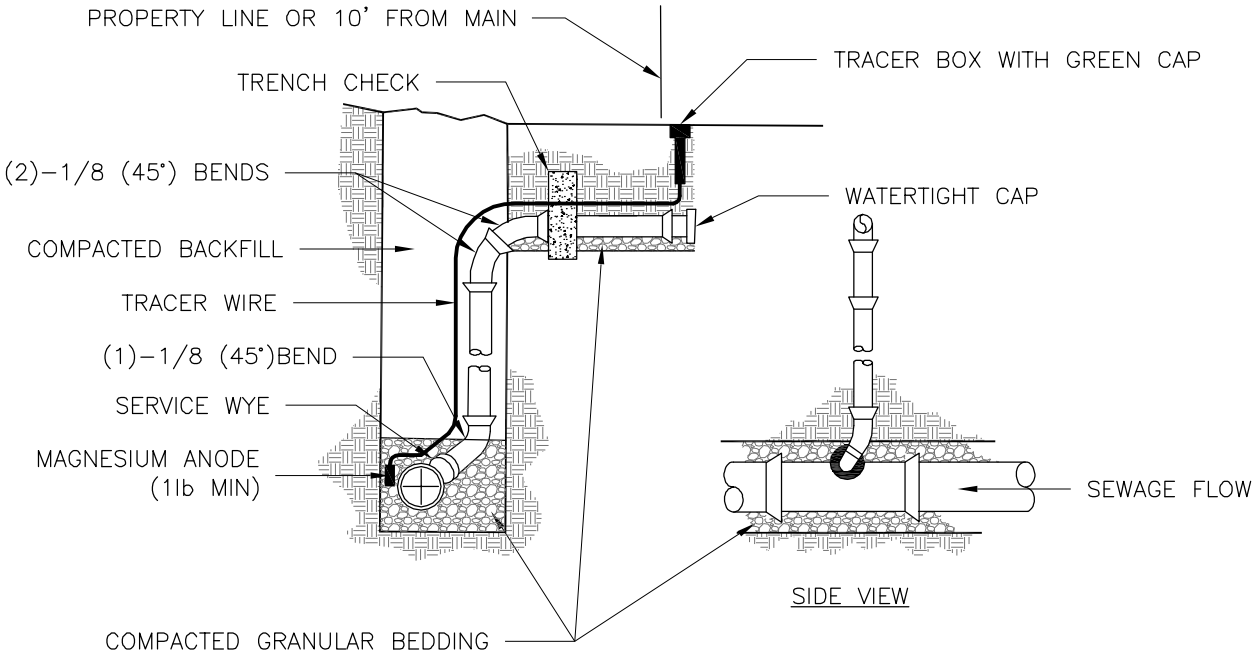

VERTICAL RISER
NOT TO SCALE

NOTES:

1. ALL SEWER STUBS SHALL BE CONSTRUCTED TO PROPERTY LINE OR 10' MINIMUM FROM THE MAIN. WHERE SIDEWALKS ARE PRESENT, CONTRACTOR SHALL EXTEND SERVICE LINE UNDER EXISTING SIDEWALK TO TWO FEET BEYOND.
2. ALL NEW CONSTRUCTION OFF SEWER STUBS SHALL BE TEMPORARILY MARKED WITH A MARKING STAKE, 36" ABOVE GROUND AND PAINTED GREEN.
3. IMPERVIOUS TRENCH CHECKS SHALL BE PLACED ON BUILDING SEWER STUBS (AT LEAST 5' AWAY FROM THE SANITARY SEWER MAIN).
4. TRENCH CHECKS ON THE BUILDING SEWER STUBS SHALL EXTEND 6" BELOW THE BOTTOM OF THE PIPE. LENGTH SHALL BE A MINIMUM OF 12". THE HEIGHT OF THE TRENCH CHECK SHALL EXTEND 12" ABOVE THE TOP OF THE PIPE. THE WIDTH OF THE TRENCH CHECK SHALL BE THE WIDTH OF THE TRENCH.
5. SEE SPECIFICATION SECTION 2100 FOR SEWER MAIN BEDDING AND BACKFILL.
6. #12 GAUGE GREEN INSULATED COPPER TRACER WIRE SHALL BE INSTALLED. TRACER WIRE TERMINAL BOXES SHALL BE INSTALLED DIRECTLY ABOVE THE SEWER SERVICE OR AS DETERMINED BY THE ENGINEER.
7. FOR SERVICES, TRACER WIRE SHALL RUN FROM THE WYE AND TERMINATE IN A FLUSH MOUNTED TRACER BOX WITH A GREEN CAST IRON LOCKABLE TOP. WIRE SHALL BE TAPED OR TIED TO THE PIPE AT 5' INTERVALS.
8. TRACER WIRE BOX SHALL BE INSTALLED WITHIN 1.0' OF PROPERTY LINE.
9. THE TRACER WIRE SHALL REMAIN CONTINUOUS TO THE GREATEST EXTENT POSSIBLE. SPLICES IN THE TRACER WIRE SHOULD BE MADE WITH SPLIT BOLT CONNECTORS. WIRE NUTS SHALL NOT BE USED. A WATER-PROOF CONNECTION IS NECESSARY TO PREVENT CORROSION.

LS	LEE'S SUMMIT MISSOURI PUBLIC WORKS ENGINEERING DIVISION | 220 SE GREEN STREET | LEE'S SUMMIT, MO 64063	Date: 04/17 Drawn By: MJF Checked By: DL
	BUILDING SEWER STUB AND RISER	SAN-1

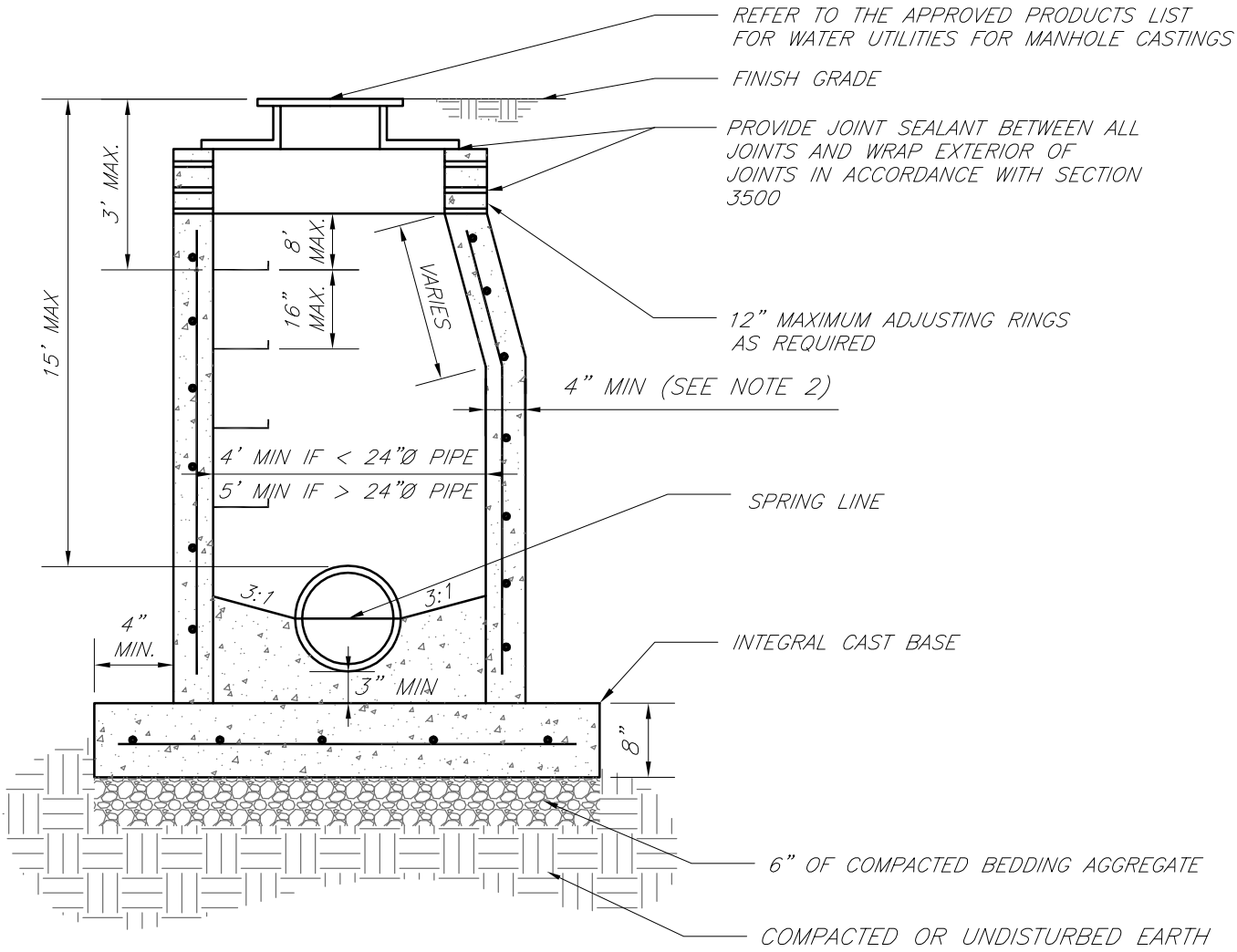

NOTES:

1. PRECAST CONCRETE MANHOLES SHALL CONFORM TO ASTM C478 EXCEPT AS MODIFIED BY THE SPECIFICATIONS.
2. A WALL THICKNESS NOT LESS THAN ONE–TWELFTH (1/12) OF THE INSIDE DIAMETER OR 4", WHICHEVER IS GREATER, SHALL BE USED WHEN THE MANHOLE DEPTH IS LESS THEN 15'.
3. WATERPROOFING SHALL BE REQUIRED ON THE OUTSIDE OF MANHOLES. THE WATERPROOFING SHALL CONSIST OF A TOTAL DRY FILM THICKNESS OF NOT LESS THAN 14 MILS OF BITUMINOUS COATING.
4. ONLY ECCENTRIC MANHOLE CONES WILL BE ALLOWED UNLESS OTHERWISE APPROVED BY THE CITY ENGINEER.
5. THE FILL CONCRETE FLOW CHANNEL FOR SIDE BRANCHES SHALL BE PLACED TO PROVIDE A SMOOTH TRANSITION INTO THE FLOW LINE.
6. REFER TO THE APPROVED PRODUCTS LIST FOR WATER UTILITIES FOR APPROVED MANHOLE GASKET MODELS.
7. REFER TO THE APPROVED PRODUCTS LIST FOR APPROVED STEPS.

LS	**LEE'S SUMMIT** MISSOURI PUBLIC WORKS ENGINEERING DIVISION | 220 SE GREEN STREET | LEE'S SUMMIT, MO 64063	Date: 02/13
		Drawn By: JN
		Checked By: DL
		FILE: SAN–2
	STANDARD PRECAST MANHOLE – SANITARY SEWER	Rev: 1/14
		Rev:

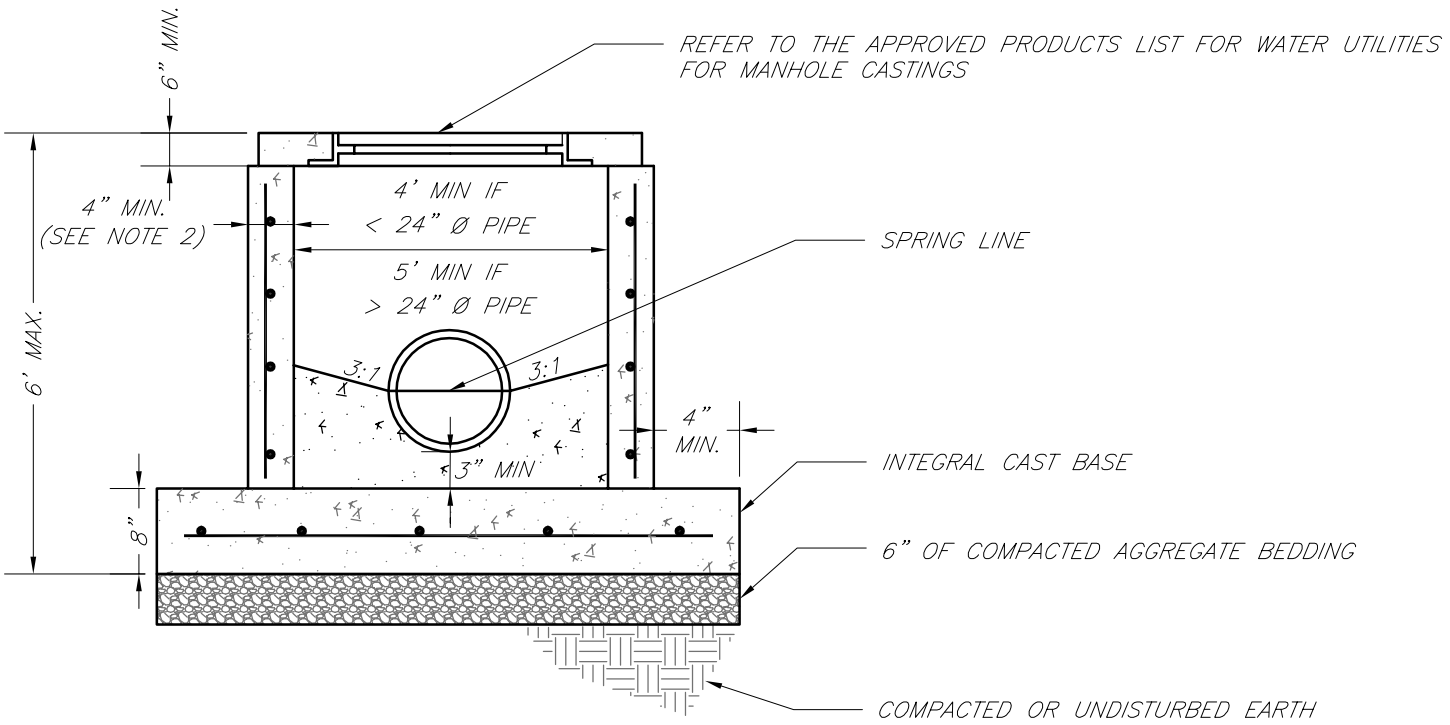

ELEVATION

NOTES:

1. PRECAST CONCRETE MANHOLES SHALL CONFORM TO ASTM C478 EXCEPT AS MODIFIED BY THE SPECIFICATIONS.
2. A WALL THICKNESS NOT LESS THAN ONE-TWELFTH (1/12) OF THE INSIDE DIAMETER OR 4", WHICHEVER IS GREATER SHALL BE USED.
3. WATERPROOFING SHALL BE REQUIRED ON THE OUTSIDE OF MANHOLES. THE WATERPROOFING SHALL CONSIST OF A TOTAL DRY FILM THICKNESS OF NOT LESS THEN 14 MILS OF BITUMINOUS COATING.
4. THE FILL CONCRETE FLOW CHANNEL FOR SIDE BRANCHES SHALL BE PLACED TO PROVIDE A SMOOTH TRANSITION INTO THE FLOW LINE.
5. REFER TO THE APPROVED PRODUCTS LIST FOR WATER UTILITIES FOR MANHOLE GASKET MODELS.
6. PROVIDE STEPS AS SHOWN ON THE APPROVED PRODUCTS LIST FOR MANHOLE DEPTHS GREATER THAN 4'.

LS	LEE'S SUMMIT MISSOURI PUBLIC WORKS ENGINEERING DIVISION | 220 SE GREEN STREET | LEE'S SUMMIT, MO 64063	Date: 02/13
		Drawn By: JN
		Checked By: DL
		FILE: SAN-3
	SHALLOW PRECAST MANHOLE – SANITARY SEWER	Rev: 1/14
		Rev:

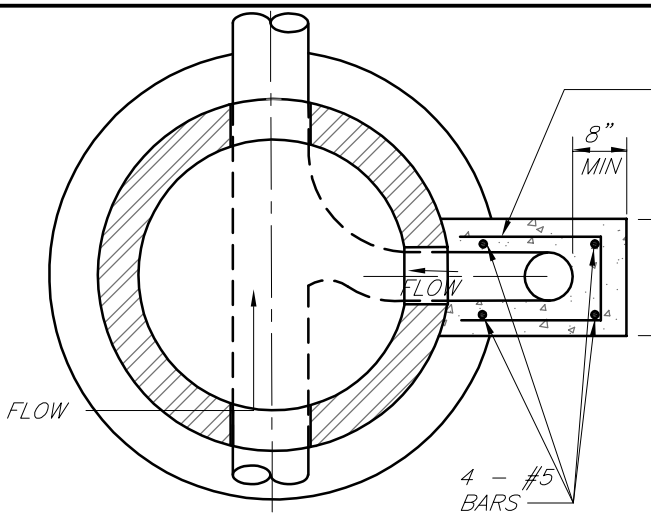

SECTION A–A

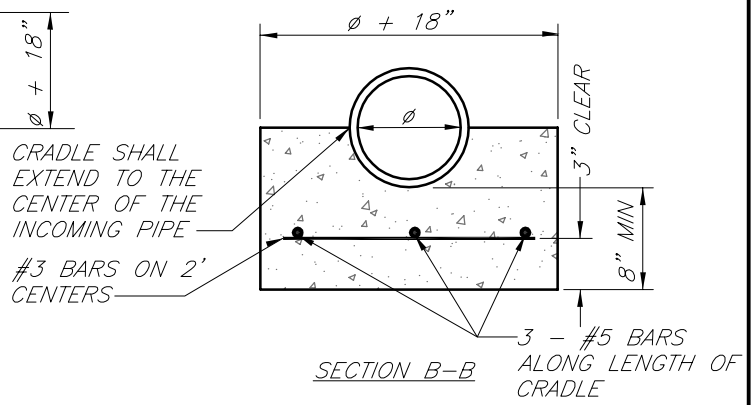

SECTION B–B

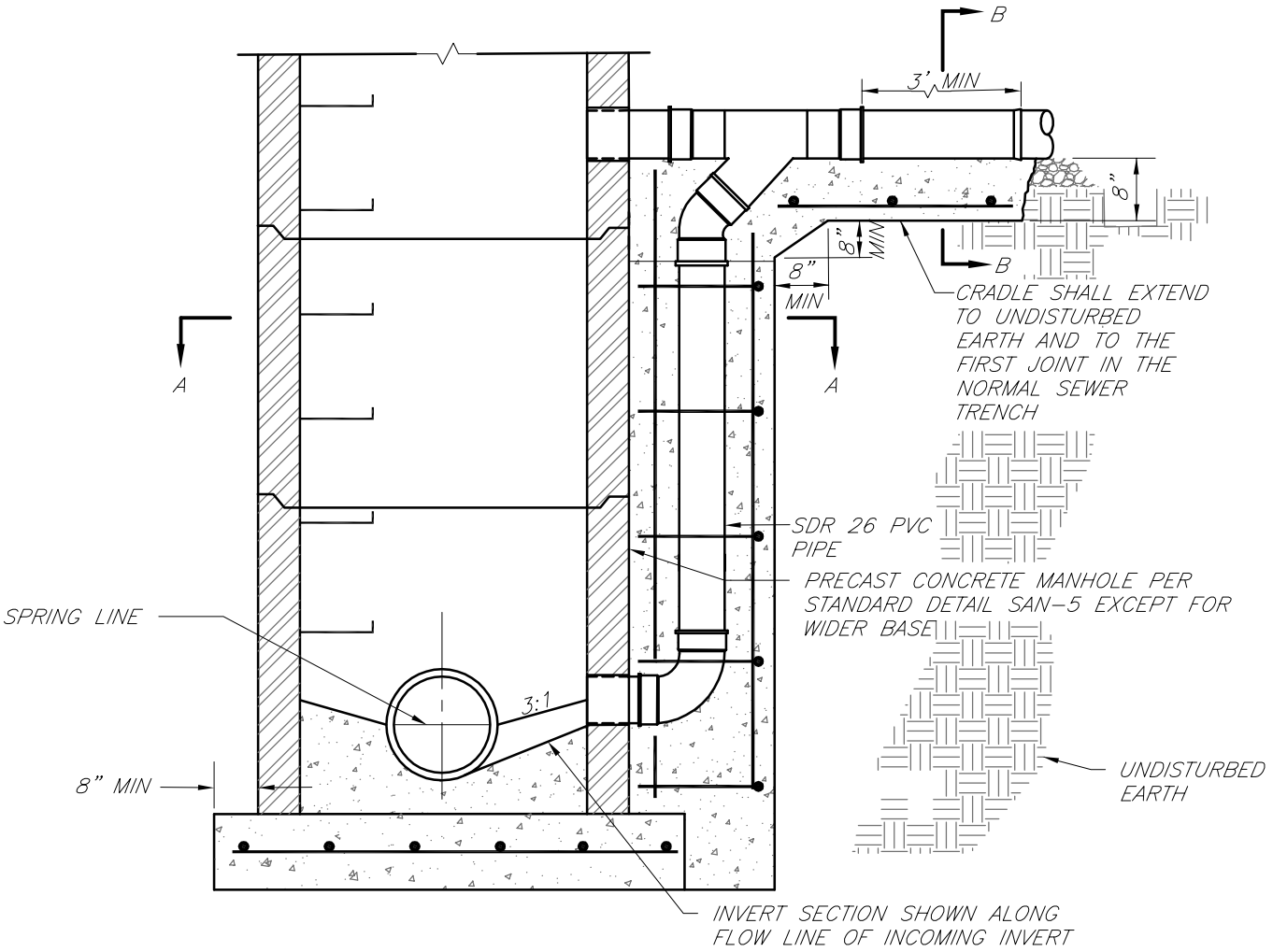

ELEVATION

NOTE:
REFER TO DRAWING SAN–2 FOR MANHOLE DETAILS NOT SHOWN.

LS	LEE'S SUMMIT MISSOURI PUBLIC WORKS ENGINEERING DIVISION | 220 SE GREEN STREET | LEE'S SUMMIT, MO 64063	Date: 02/13
		Drawn By: JN
		Checked By: DL
		FILE: SAN–4
	DROP SANITARY SEWER MANHOLE	Rev: 1/14
		Rev:

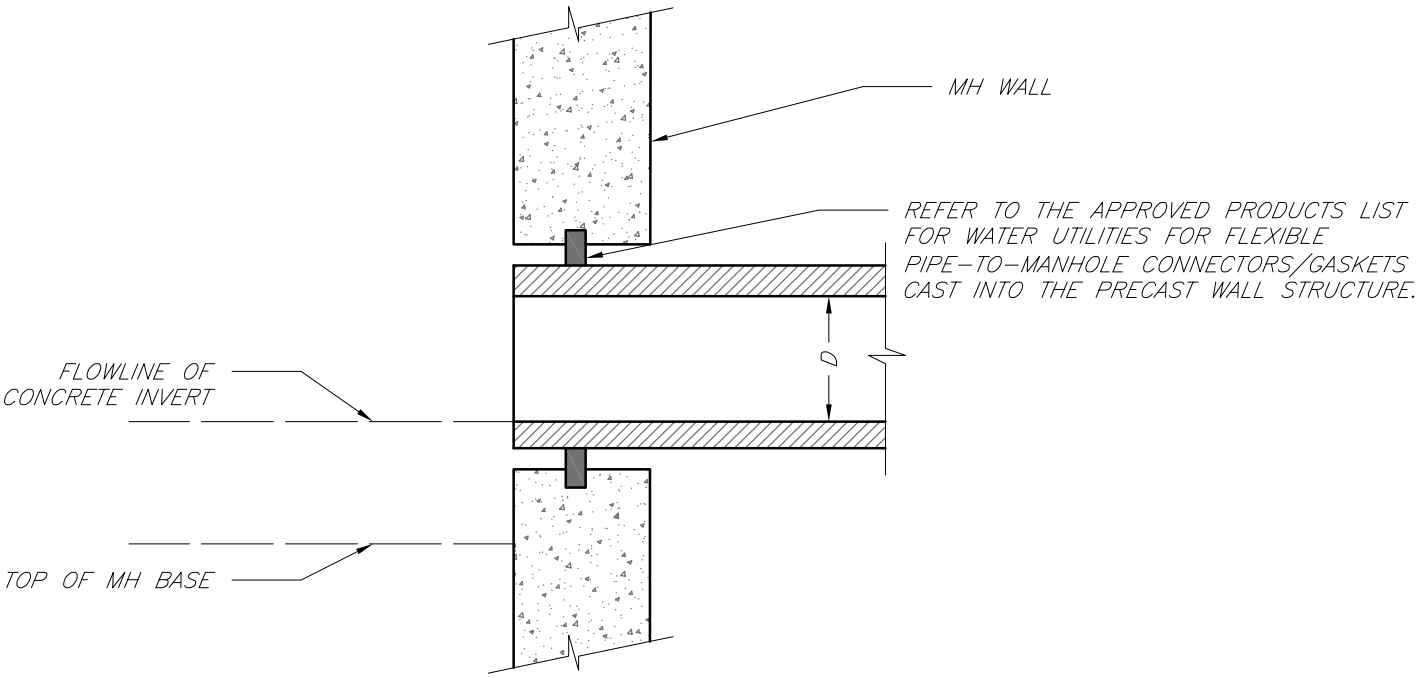

NEW MANHOLE

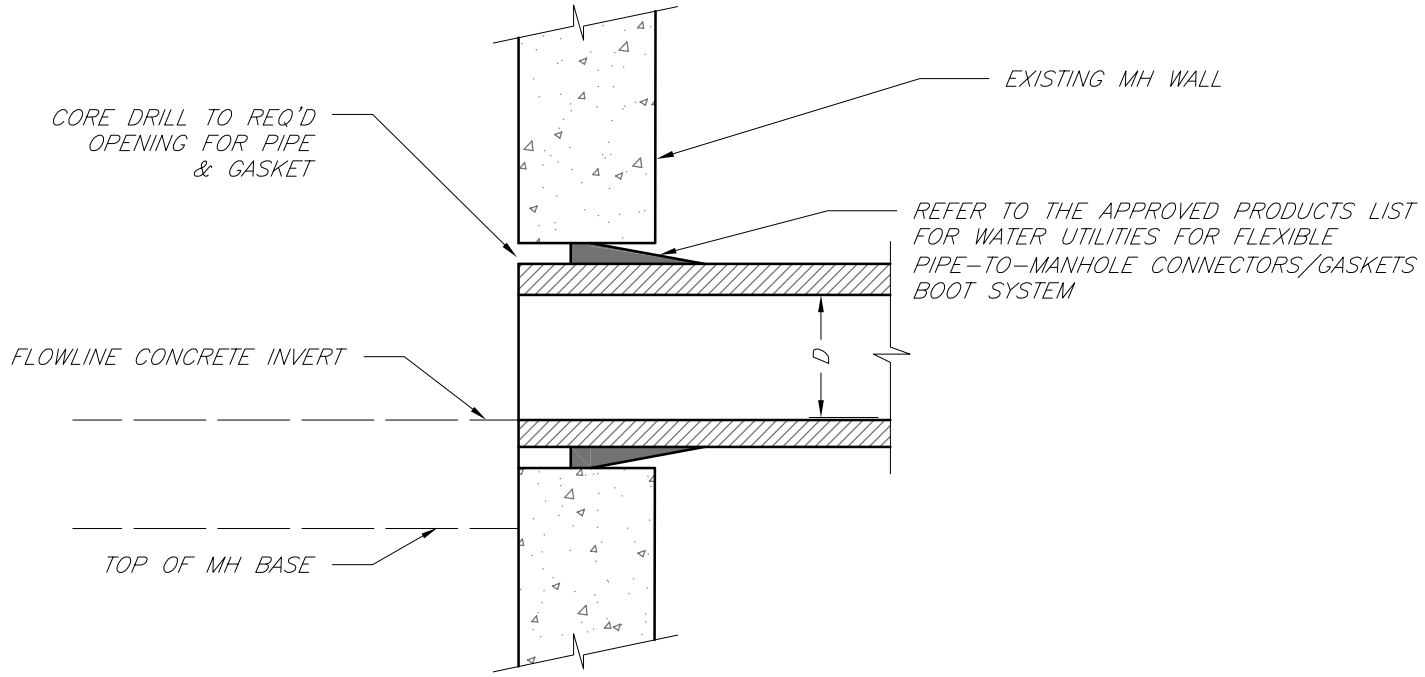

EXISTING MANHOLE

LS	**LEE'S SUMMIT** MISSOURI PUBLIC WORKS ENGINEERING DIVISION | 220 SE GREEN STREET | LEE'S SUMMIT, MO 64063	Date: 02/13
		Drawn By: JN
		Checked By: DL
		FILE: SAN-5
	MANHOLE WALL CONNECTIONS	Rev: 1/14
		Rev:

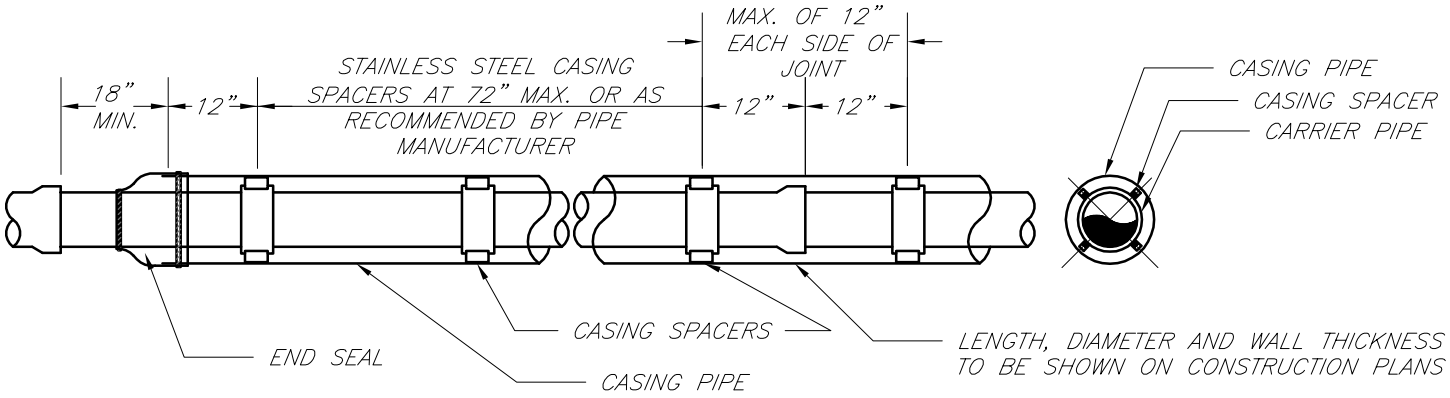

STAINLESS STEEL SPACERS

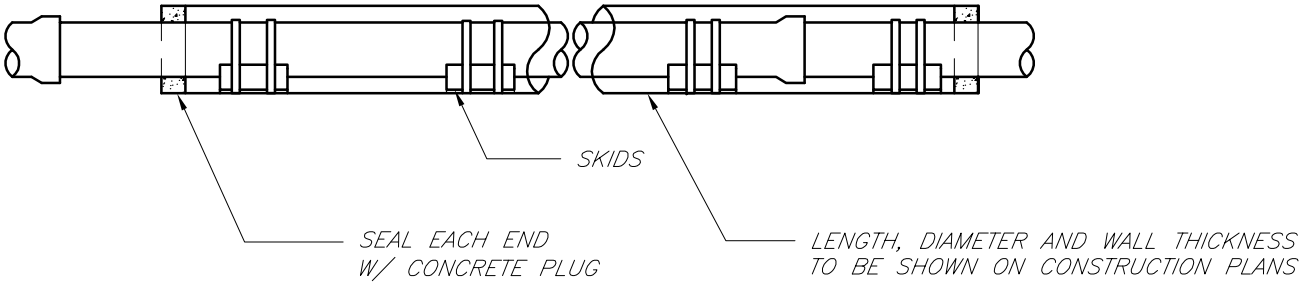

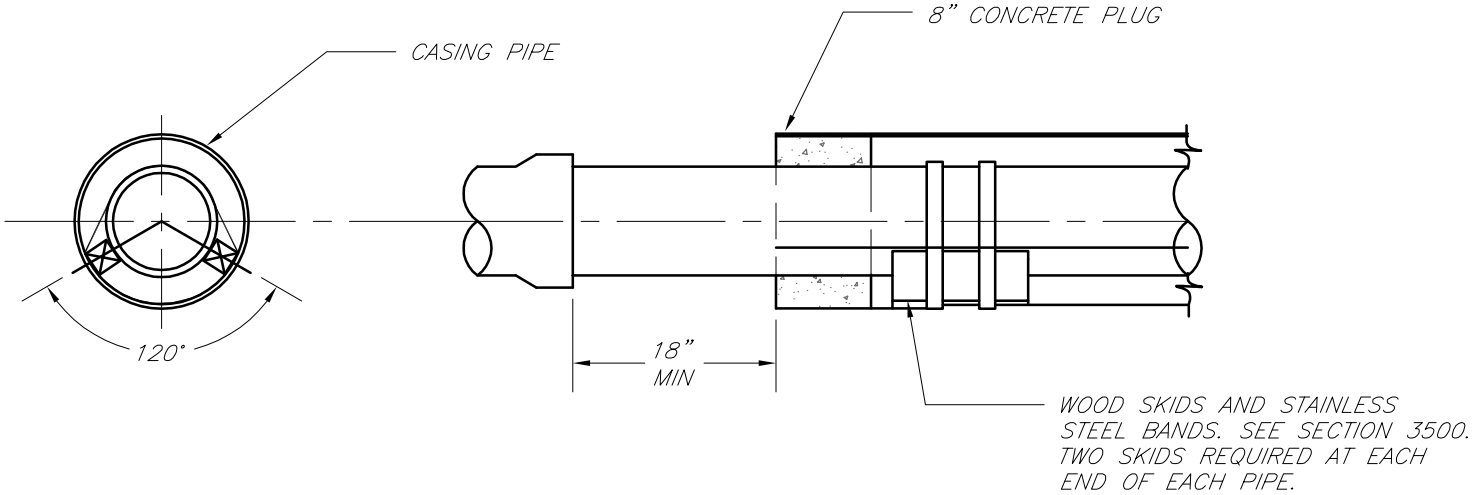

WOOD SKIDS

NOTE:
IF WOOD SKIDS ARE USED, ANNULAR SPACE BETWEEN CASING PIPE AND CARRIER PIPE SHALL BE FILLED WITH SAND.

LS	LEE'S SUMMIT MISSOURI PUBLIC WORKS ENGINEERING DIVISION | 220 SE GREEN STREET | LEE'S SUMMIT, MO 64063	Date: 02/13
		Drawn By: JN
		Checked By: DL
		FILE: SAN-6
	CASING PIPE DETAIL	Rev: 1/14
		Rev:

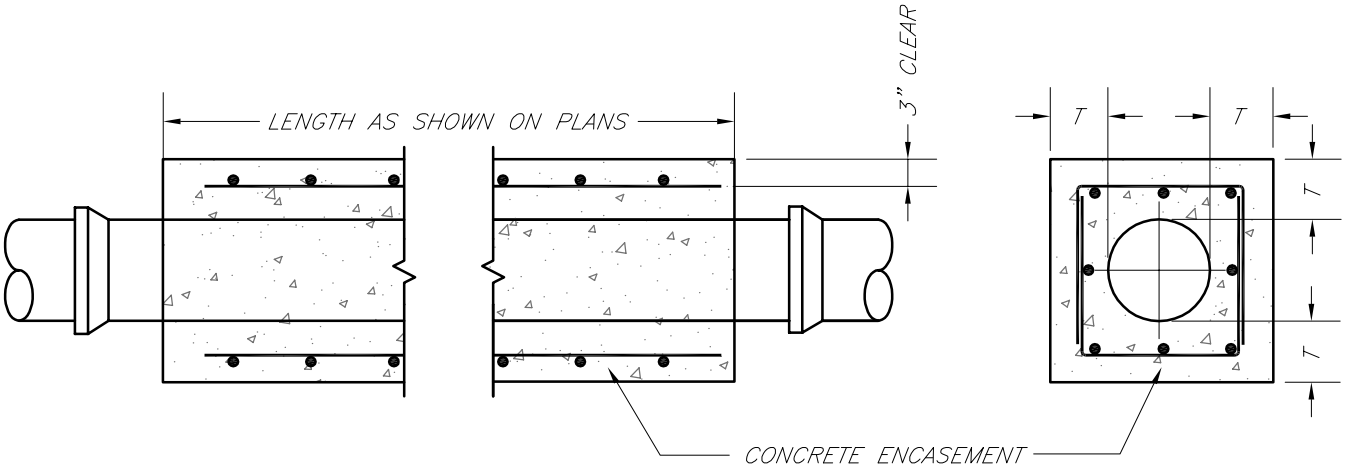

NOTES:

1. FOR PIPES LESS THAN 15", T = 6" MIN.
2. FOR PIPES 15" THRU 36", T = 8" MIN.
3. INTERMEDIATE BELLS SHALL BE ENCASED.
4. REINFORCING STEEL SHALL BE #4 @ 12" O.C. EACH WAY WITH A MINIMUM REBAR LAP OF 12".

LS	LEE'S SUMMIT MISSOURI PUBLIC WORKS ENGINEERING DIVISION | 220 SE GREEN STREET | LEE'S SUMMIT, MO 64063	Date: 02/13
		Drawn By: JN
		Checked By: DL
		FILE: SAN-7
	SANITARY PIPE ENCASEMENT	Rev: 1/14
		Rev: