CITY OF LEE'S SUMMIT, MISSOURI
PRAIRIE LEE LAKE
LOW PRESSURE SEWER SYSTEM

IMPROVEMENTS ON PRIVATE PROPERTY:

DESIGN AND CONSTRUCTION MANUAL

JANUARY 2010

Table of Contents

SECTION 1 **SCOPE** **1-1**

SECTION 2 **PROCEDURES** **2-1**

SECTION 3 **DESIGN CRITERIA** **3-1**

3.1 GRINDER PUMP STATION LOCATION 3-1

3.2 CONTROL PANEL LOCATION 3-1

3.3 ELECTRICAL WIRING FOR CONTROL PANEL 3-1

3.4 1-¼-INCH DISCHARGE LINE 3-2

3.5 4-INCH SERVICE LINE 3-2

3.6 SEPTIC TANK CLOSURE 3-2

SECTION 4 **SUBMITTALS** **4-1**

SECTION 5 **INSPECTIONS** **5-1**

SECTION 6 **SPECIFICATIONS** **6-1**

SECTION 7 **DETAILS** **7-1**

SECTION 8 **APPROVED CONTRACTORS** **8-1**

SECTION 9 **SAMPLE PACKET SUBMITTAL** **9-1**

Section 1 SCOPE

This manual outlines procedures that must be followed by property owners and contractors in installing low pressure sewer improvements on their property within the Prairie Lee Lake Community Improvement District (CID).

There are two residential areas located on the north and south sides of Prairie Lee Lake within the CID boundaries. The CID boundary is shown in Figure 1-1.

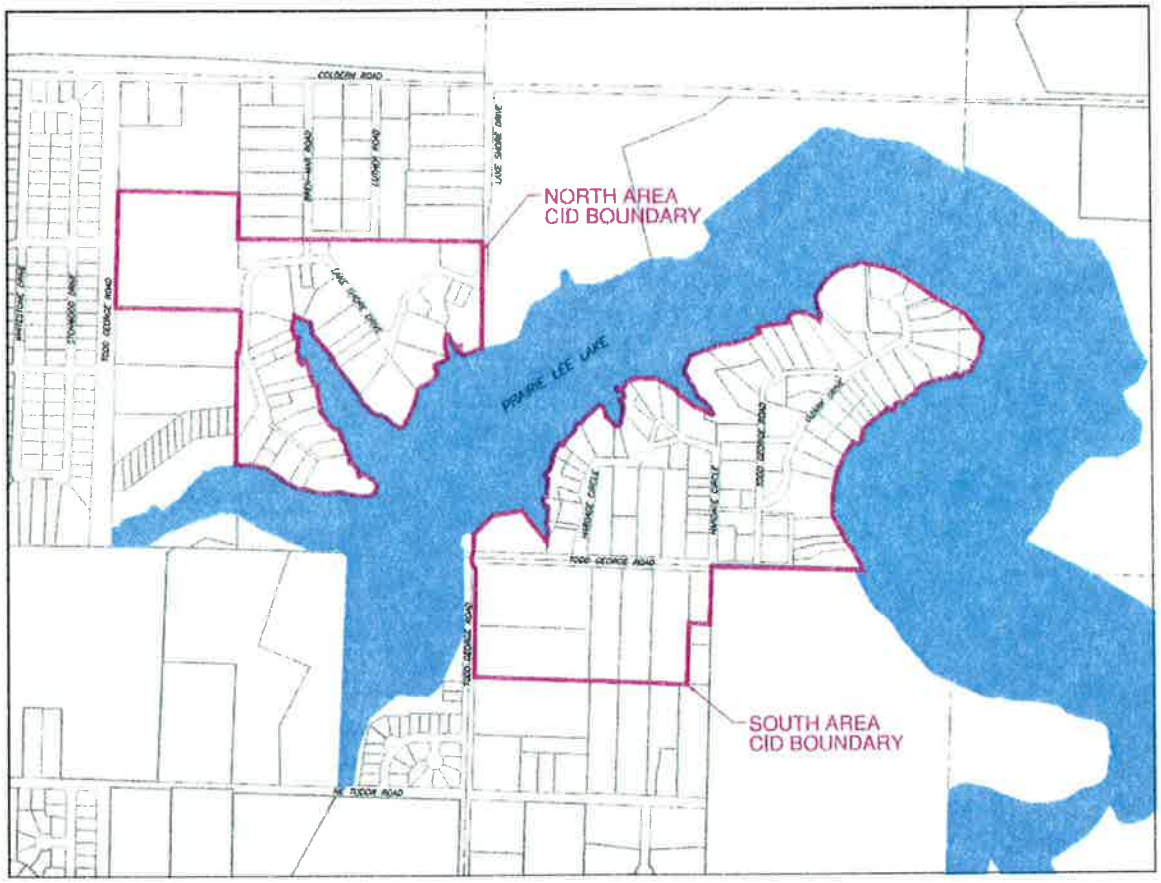

Figure 1-1 – CID Boundary

The area within the CID boundary is served by a low pressure sewer system. A low pressure sewer system is a collection of small diameter pressure mains that pump flow into the gravity sewer lines. The flow is pumped by grinder pumps, located at each home, which pump the flow through discharge mains into the low pressure sewer mains.

The low pressure sewer mains have been constructed and are ready to take flow from each home to the gravity sewer lines. The low pressure sewer mains contain components such as isolation valves, air release valve assemblies, and combination air valve assemblies. The isolation valves give the ability to shut off portions of the system for maintenance purposes. The air release and combination air valve assemblies release built up air within the system, and add additional air to the system when required. The low pressure sewer system also contains odor control stations which inject chemicals into the system to prevent and eliminate odors created by retention of sewage within the system. Each lot within the CID boundary contains a discharge line stub-out.

The discharge line stub-out will need to be connected at the property line in order to serve a lot. Figure 1-2 shows the low pressure sewer main layout within the CID boundary.

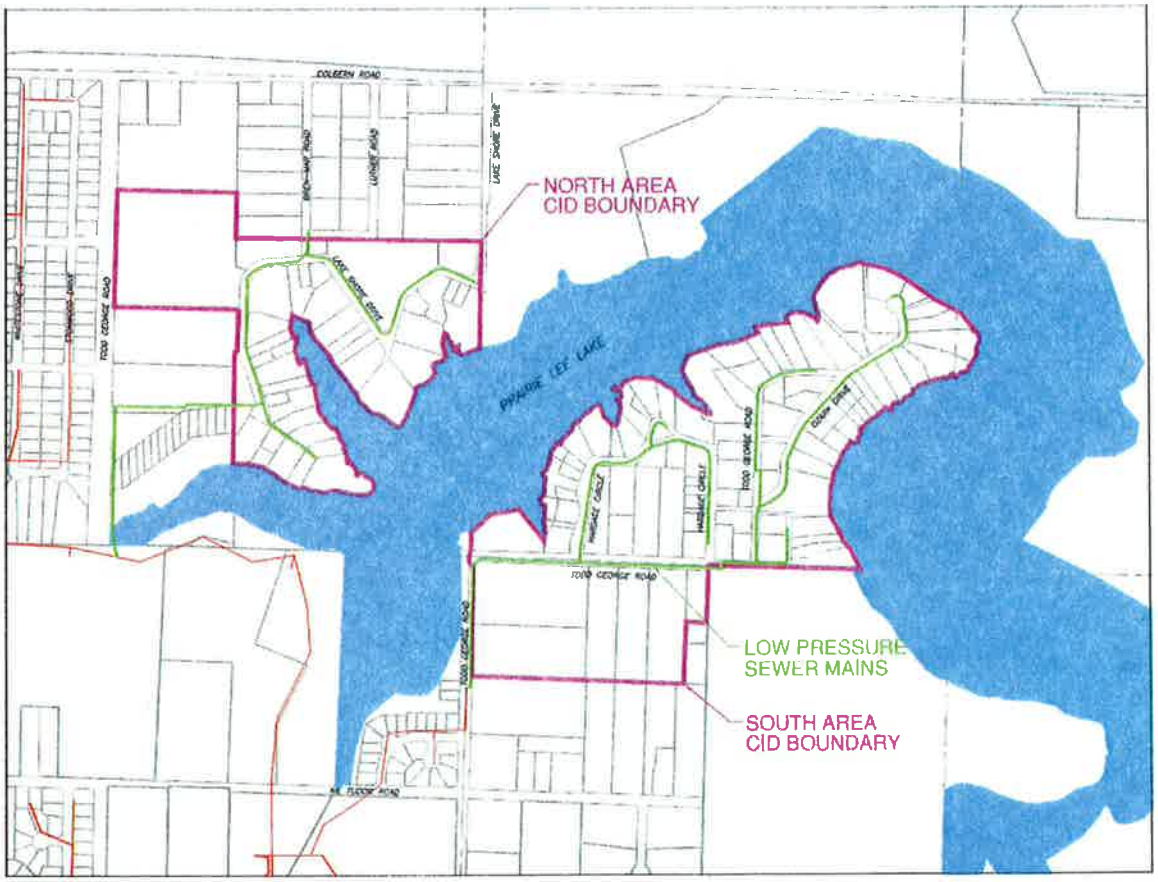

Figure 1-2 – Low Pressure Sewer Main Layout

The components that need to be constructed on each property, in order to connect into the low pressure sewer system include a grinder pump, the service line from the existing service line to the grinder pump, the discharge line from the grinder pump to the low pressure sewer main, valving on the discharge line, and the control panel and electrical connection for the grinder pump. Figure 1-3 shows all of the components required for each property.

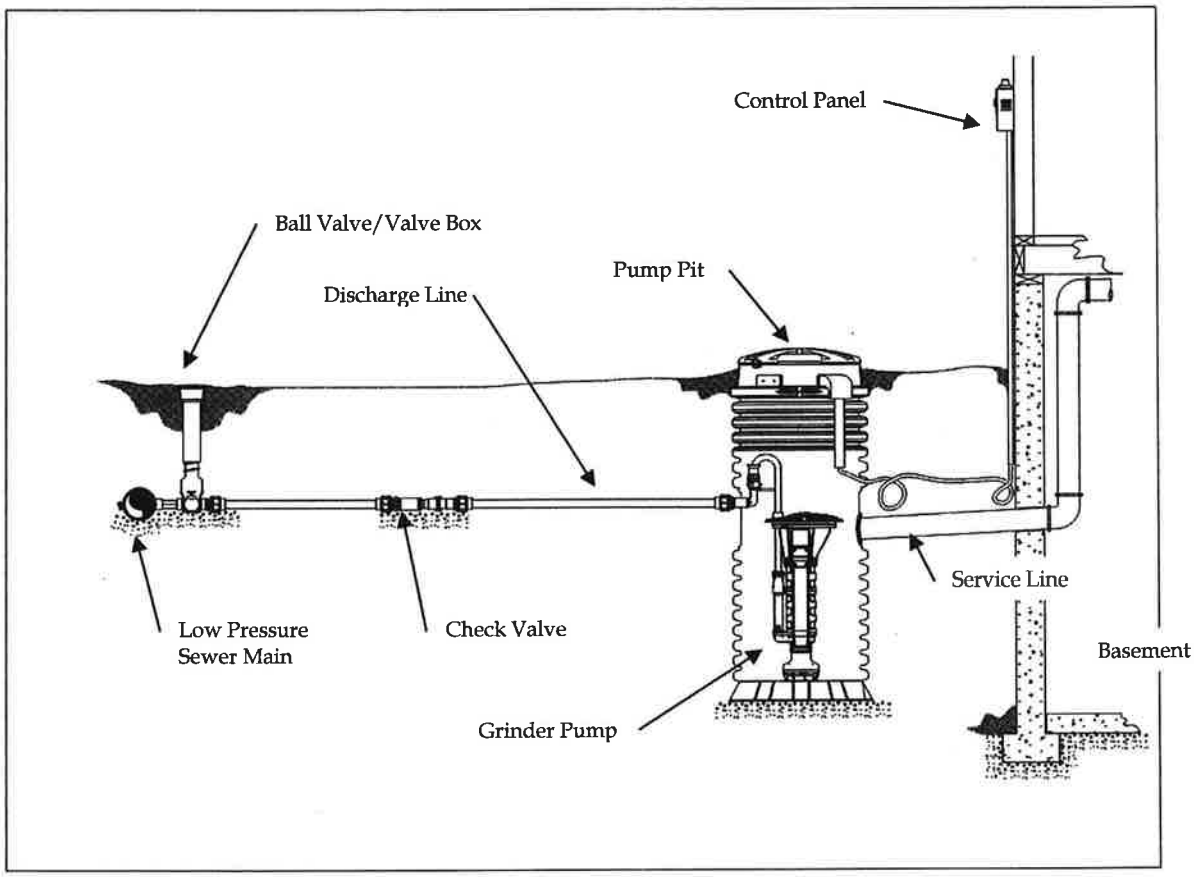

Figure 1-3 – Private Property Components

This manual will describe the procedures and design criteria that must be followed by each property owner and contractor in order to install all of the components required on each property and connect into the low pressure sewer system.

Section 2 PROCEDURES

The following outlined procedures must be followed for constructing private property improvements and connection to low pressure sewer system:

1. Property owner decides to connect to the low pressure sewer system.
2. Property owner can obtain a list of licensed plumbers within the City of Lee's Summit that have expressed interest in the project.
3. Property owner chooses to contact plumbers licensed within the City of Lee's Summit and obtain bids from the contractors to perform the work necessary as outlined in this manual to connect the property to the low pressure sewer system. Property owner can chose to perform the work themselves as an exception to hiring a licensed plumber. Design and construction guidelines outlined in this manual must be followed by either the licensed plumber or the property owner, whomever the work is being performed by..
4. Property owner and/or contractor work out a plan as to where all of the private property components will be located on their property. Property owner and/or contractor should evaluate connections to the sewer system to ensure that only sanitary sewer flow is conveyed into the sewer system, and storm water flow is discharged to daylight.
5. The contractor shall prepare a site plan using the listed design criteria.
6. The contractor shall submit a site plan packet to the Codes Administration Department for approval. The site plan packet shall include the site plan, a site plan submittal form, a copy of the compliance certificate, and product data sheets on all materials that will be used on the project. The project data sheets submitted on all materials must comply with the specifications included in this manual.
7. The Codes Administration Department will review the site plan packet submitted and will fill out the site plan submittal review checklist. A copy of the site plan submittal review checklist will be returned to the contractor "approved" or with comments that will need to be addressed. If changes are required on the site plan, or re-submittals on materials, the contractor must make the necessary changes then re-submit the information for permit approval.
8. Once the contractor receives the site plan submittal review checklist with "approved" marked, and the permit obtained, the contractor may schedule the private property improvements.
9. The scheduling of the private property improvements must be coordinated by the property owner and the contractor, with respect to the availability of the City inspectors. The work must be performed at a time when the City inspectors will be available for timely inspections. Therefore the property owner does not want to schedule the work to be constructed, then find out the City cannot inspect the work for some time, therefore startup cannot occur and the property owner will not be able to use facilities within the home for an extended period. The Codes Administration Department working hours are 8:00 A.M. – 5:00 P.M. Monday through Friday except for holidays.
10. The contractor shall install the grinder pump, control panel, discharge line, and service line. The discharge line shall be connected into existing stub-out from the

main line. The ball valve on the discharge line shall remain closed until system has been inspected and approved by the City. The service line shall be installed up to the connection point into the existing service line. The service line shall not be connected into the existing service line until the system has been inspected and approved by the City. The grinder pump, the discharge line connection into the main, and the service line shall not be backfilled until the system has been inspected and approved by the City.

11. After the contractor has installed the grinder pump, control panel, discharge line, and service up to the connection into the existing service line, prior to backfilling, the contractor shall call the City for an inspection. The discharge line should be pressurized and the pressure test initiated (record the time) just prior to the City inspector arriving to perform the inspection.

12. The City will conduct the inspection. The City will fill out the private property inspection checklist. The City will verify the discharge testing. If all components are installed properly, and the discharge testing is approved, the remaining construction and testing can proceed. Any additional inspections, if required, should be coordinated with the Codes Administration Department.

13. After securing City approval, the service line may then be connected to the existing service line and all items backfilled. Startup, testing, cleanup, demolition of septic tank, and opening of the ball valve can then be completed.

14. The contractor must contact the Jackson County Public Works Department for septic tank demolition requirements. As a minimum, the septic tank must be exposed and the contents pumped out by a licensed pumping company. A receipt should be obtained from the pumping company. Once its contents are completely removed, the septic tank should be collapsed in place, buried, and then backfilled with impervious soil.

Section 3 DESIGN CRITERIA

The following design criteria shall be followed in the developing and designing of a private property improvements site plan.

3.1 GRINDER PUMP STATION LOCATION

1. Grinder pump station shall be located at least 10 feet outside of basement wall or wall footing, or such that a minimum excavation slope of 1 horizontal : 1 vertical can be maintained from top of ground to bottom of excavation, whichever is greater.
2. Maintain a minimum of 10 feet from property lines.
3. Grinder pump station shall be installed a maximum of 20 feet from the building, unless otherwise approved.
4. Grinder pump station shall be installed in close proximity to existing septic tank.
5. Grinder pump shall be one of the models listed in Section 11200 of the specifications located within this design and construction manual. Installation details shall be per manufacturer recommendations and details located within this design and construction manual.

3.2 CONTROL PANEL LOCATION

1. Control panel shall be attached to the side of the building, within site distance of the grinder pump station.
2. Control panel shall be installed so that the bottom of the panel is a minimum of 4 feet above the ground.
3. Installation shall be in accordance with the adopted codes.
4. Control panel shall include a NEMA L10-30 receptacle with weather tight cover for generator connection.
5. The control panel shall contain a 30 amp power relay which will automatically switch the pump station from the normal power source to the generator receptacle any time the receptacle is powered.
6. Control panel shall be supplied by the pump manufacturer, as defined in Section 11200 of the specifications located within this design and construction manual.

3.3 ELECTRICAL WIRING FOR CONTROL PANEL

1. Property owner will have to provide a dedicated, 20 amp, 120/240 volt circuit from the premises service panel, to power the grinder pump station.
2. This circuit shall serve no other electrical loads other than the new grinder pump station and the circuit shall be provided with overload protection rated at 20 amps.
3. The circuit conductors shall include two #12 phase conductors, a #12 neutral, and a #12 ground conductor.
4. The wiring methods shall be in accordance with the adopted codes.
5. Once the wall of the structure is penetrated the conductors shall be routed in ¾" RGS or schedule 80 PVC conduit.

6. The wiring between the control panel and the grinder pump station may be multi-conductor single sheath cable designed for direct burial. The number and size of the conductors shall be as per the pump manufacturer's recommendations. This direct buried cable shall be provided protection by being placed in PVC conduit from a point 18" below ground to the point that it connects to the control panel or enters the grinder pump station.
7. All electrical work shall be carried out by a licensed electrician.

3.4 1-¼-INCH DISCHARGE LINE

1. 1 ¼-inch discharge line shall be installed a minimum of five (5) feet from any property line.
2. Avoid installation of 1 ¼-inch discharge line under decks, patios, driveways, sidewalks, etc, if possible.
3. Discharge lines shall maintain a minimum of 42 inches of cover from existing grade to top of pipe.
4. Discharge lines shall conform to Discharge Line Installation Detail, Thrust Block Details For PVC Schedule 40 Discharge Piping Detail, and Section 18110 of the specifications located within this design and construction manual.
5. Ball valve, valve box and valve cover shall be placed on discharge line just upstream of the low pressure sewer main connection point per Discharge Line Installation With Ball Valve And Check Valve Detail located within this design and construction manual.
6. A check valve shall be installed on the discharge line upstream of the ball valve per Discharge Line Installation With Ball Valve And Check Valve Detail located within this design and construction manual.

3.5 4-INCH SERVICE LINE

1. A new service line shall tie into the existing service line and connect into the grinder pump.
2. The existing service line shall be replaced back to the foundation wall if the existing service line contains cracks, roots, broken pipe segments, or offset joints.
3. The new service line shall be installed at a 2% slope or greater from the existing service line to the grinder pump station.
4. All building service lines need to be identified, verified and put on the site plan. This includes all gray water lines such as laundry discharge lines. All service lines from the building should be tied into the grinder pump.
5. Service lines shall conform to Section 18110 of the specifications located within this design and construction manual.

3.6 SEPTIC TANK CLOSURE

1. Jackson County Public Works Department should be contacted for septic tank demolition requirements.
2. As a minimum, locate and excavate existing septic tank lid. Remove lid from existing septic tank.
3. A licensed pumping company must pump all contents from septic tank. A receipt should be obtained from the pumping company.

4. Once its contents are removed, the septic tank will be collapsed in place, buried, and backfilled with impervious soil.

Section 4 SUBMITTALS

A site plan detailing the private property improvements and product data sheets of all materials that will be used, shall be submitted, by the contractor, to the City for approval prior to construction. The site plan should show general information needed to ensure the private property improvements are designed and installed in accordance with manual requirements. All materials and items included on the site plan shall meet the standard specifications and details within this design and construction manual. The City may provide, if available, a site sheet showing the property lines and right of way lines. A mortgage survey will suffice as the site sheet to prepare the required information. Aerial information may be obtained from the City to assist in preparing site plan drawings. All the site plan requirement information may be hand drawn on the site plan. The following information shall be included on the site plan.

- City-provided Site Plan:
  - Scale (1"=30' or larger)
  - North arrow
  - property lines
  - right-of-way lines
  - building outline from aerial photo
  - driveways/sidewalks from aerial photo
- Existing information to be added by the property owner to City-provided Site Plan:
  - fences/gates that must be crossed to access grinder pump location
  - existing utilities such as gas, electric, telephone, cable, water lines, sewer lines, low pressure sewer mains, etc. (as obtained from Missouri One Call – 1-800-344-7483)
  - septic tank location
  - indicate any facilities that utilize/discharge large quantities of water to the sewer (hot tubs, pools, etc.)
  - building service line
  - grey water lines
  - Ball valve location (if already installed as part of main line construction)
- Proposed improvements to be added to City provided Site Plan, with dimensions:
  - new service line from existing service line to grinder pump
  - grinder pump station location
  - control panel location
  - electrical wiring route
  - 1 ¼" discharge line alignment
  - Ball valve (if not already installed as part of main line construction) and check valve location on 1 ¼" discharge line
  - connection point to low pressure sewer main location
- Provide the number of drains in the house, such as toilets, sinks, showers, etc. Floor drains are not included in this number.

The enclosed site plan submittal form shall be included with the site plan, copy of the compliance certificate, along with cut sheets for all materials being used, and submitted to the City for approval. The City will complete the enclosed site plan submittal review checklist and it will either be returned to the permit applicant "approved" or with comments that will need to be addressed prior to obtaining permit approval.

CITY OF LEE'S SUMMIT, MISSOURI
PRAIRIE LEE LAKE
LOW PRESSURE SEWER SYSTEM

SITE PLAN SUBMITTAL
COVER SHEET

The permit applicant shall submit two copies of this form, a site plan, and material/equipment cut sheets for review and approval.

A. Submittal Date: _____

Site Address: _____

City, Street, & Zip: _____

B. Home Owner

Name: _____

Address: _____

City, Street, & Zip: _____

Phone Number: _____

Alternate Phone Number: _____

C. Contractor or Plumber

Contact Name: _____

Company Name: _____

Address: _____

City, State & Zip: _____

Phone Number: _____

Fax Number: _____

-End-

CITY OF LEE'S SUMMIT, MISSOURI
PRAIRIE LEE LAKE
LOW PRESSURE SEWER SYSTEM

SITE PLAN SUBMITTAL REVIEW CHECKLIST

A. Submittal Date: _____

Site Address: _____

City, State & Zip: _____

B. Home Owner Name: _____

C. Contractor Name: _____

D. Two Copies of Site Plan Submittal Cover Sheet: ☐Yes ☐No

E. Two Copies of Material Cut Sheets: ☐Yes ☐No

F. Site Plan Sketch or Drawing: ☐Yes ☐No

		Comments:
1. Existing Information:		
a. scale – 1" = ___	☐Yes ☐No	_____
b. north arrow	☐Yes ☐No	_____
c. property lines	☐Yes ☐No	_____
d. right-of-way lines	☐Yes ☐No	_____
e. building footprint	☐Yes ☐No	_____
f. driveways/sidewalks	☐Yes ☐No	_____
g. fences/gates	☐Yes ☐No	_____
h. existing utilities	☐Yes ☐No	_____
gas	☐Yes ☐No	_____
water	☐Yes ☐No	_____
electric	☐Yes ☐No	_____
telephone	☐Yes ☐No	_____
cable	☐Yes ☐No	_____
sewer	☐Yes ☐No	_____
i. septic tank location	☐Yes ☐No	_____
j. building service line	☐Yes ☐No	_____
k. gray water lines identified facilities discharging large quantities of water identified	☐Yes ☐No	_____

Comments:

2. Proposed Improvements: ☐Yes ☐No _____

   a. Grinder pump station
      - Is station a minimum 10 feet from basement wall ☐Yes ☐No _____
      - Is station a minimum of 10 feet from property line ☐Yes ☐No _____
      - Is station within 20 feet of the building ☐Yes ☐No _____
      - Is station a model listed in specifications ☐Yes ☐No _____
      - Is station in close proximity to existing septic tank ☐Yes ☐No _____

   b. Control panel
      - Is panel attached to the side of the building within site distance of station ☐Yes ☐No _____
      - Is panel supplied by the pump manufacturer ☐Yes ☐No _____

   c. Electrical wiring ☐Yes ☐No _____
      - Is electrical line route shown on site plan ☐Yes ☐No _____

   d. 1 ¼" discharge line
      - Is discharge line minimum 5 feet from property line ☐Yes ☐No _____
      - Is discharge line being run under a deck, patio, driveway, or sidewalk ☐Yes ☐No _____
      - Discharge line material meet specifications ☐Yes ☐No _____
      - Ball valve/valve box/box cover are shown just upstream of low- pressure sewer main connection ☐Yes ☐No _____
      - Ball valve/valve box/box cover meet specifications ☐Yes ☐No _____
      - Check valve is shown upstream of ball valve ☐Yes ☐No _____
      - Check valve meets specifications ☐Yes ☐No _____

Comments:

e. New building service line
   - Is the new service line shown tieing into existing service line ☐Yes ☐No _____
   - Are all service lines identified and being connected into grinder pump ☐Yes ☐No _____
   - Does the material used for service line meet specifications ☐Yes ☐No _____

G. Are number of drains inside house listed ☐Yes ☐No _____

Site plan "approved" ☐Yes ☐No

Materials "approved" ☐Yes ☐No

Comments:

Reviewer: _____

Date Approved: _____

Section 5 INSPECTIONS

Inspections will be performed by the Codes Administration Department at designated points during construction phases of all private property improvements.

The contractor shall install the grinder pump station, electrical control panel, and discharge piping, discharge valving, connection into stub-out from main line, and service line from grinder pump up to the connection point into the existing service line. The discharge line shall be connected into the existing stub-out from the main line. The ball valve on the discharge line shall remain closed until system has been inspected and approved by the City. The service line shall be installed up to the connection point into the existing service line. The service line shall not be connected into the existing service line until the system has been inspected and approved by the City. The grinder pump, the discharge line connection into the main, and the service line shall not be backfilled until the system has been inspected and approved by the City.

After the contractor has installed the grinder pump, control panel, discharge line, and service up to the connection into the existing service line, prior to backfilling, the contractor shall call the City for an inspection. The discharge line testing should be started prior to the City inspection. The end of the discharge line should be plugged. The discharge line must be pressure tested for at least one hour with no loss of pressure at 1 ½ times working pressure or a minimum of 50 psi.

The City will conduct the inspection. The City will fill out the private property inspection checklist. The City will verify the discharge testing. If all components are installed properly, and the discharge testing is approved, the remaining startup testing can proceed.

Once startup testing is complete, the service line may then be connected into the existing service line and all items backfilled. Cleanup, demolition of septic tank, and opening of the ball valve can then be completed.

The contractor must contact the Jackson County Public Works Department for septic tank demolition requirements. As a minimum, the septic tank will need to be located, the lid removed, the contents pumped out by a licensed pumping company, the septic tank collapsed in place, buried, and backfilled with impervious soil. A receipt should be obtained from the pumping company.

CITY OF LEE'S SUMMIT, MISSOURI
PRAIRIE LEE LAKE
LOW PRESSURE SEWER SYSTEM

PRIVATE PROPERTY INSPECTION CHECKLIST

The contractor shall contact Codes Administration Department to schedule inspections during construction of private property improvements. The following checklist of items shall be verified by the Codes Administration Department.

Home Owner Name: _____

Site Address: _____

Phone Number: _____

			Comments
I. GRINDER PUMP STATION			
☐ Grinder pump is one listed in specifications	☐ yes	☐ no	_____
☐ Grinder pump station is installed a minimum of 10 feet outside basement wall	☐ yes	☐ no	_____
☐ Grinder pump station is installed a minimum of 10 feet from property line.	☐ yes	☐ no	_____
☐ Grinder pump station is installed a maximum of 20 feet from building	☐ yes	☐ no	_____
☐ Grinder pump station is installed in close proximity to existing septic tank	☐ yes	☐ no	_____
☐ Grinder pump has been put in place and leveled	☐ yes	☐ no	_____
☐ Concrete anchor has been placed around grinder pump	☐ yes	☐ no	_____
GRINDER PUMP STATION			☐ Approved ☐ Not Approved
II. ELECTRICAL AND CONTROL PANEL			
☐ Control panel has been placed within site distance of grinder pump station	☐ yes	☐ no	_____
☐ Control panel has been installed at least 4 feet above the ground to bottom of panel	☐ yes	☐ no	_____
☐ Control panel has been properly connected to existing lighting panel, following adopted codes	☐ yes	☐ no	_____

		Comments
☐ Control panel is equipped with a quick connect for generator	☐ yes ☐ no	_____
☐ Electrical wiring from grinder pump to control panel has been installed a minimum of 18 inches below grade	☐ yes ☐ no	_____
ELECTRICAL AND CONTROL PANEL		☐ Approved ☐ Not Approved

III. DISCHARGE LINE

☐ Discharge line material meets specifications	☐ yes ☐ no	_____
☐ Discharge line is installed a minimum of 42 inches below grade	☐ yes ☐ no	_____
☐ Ball valve/valve box/box cover installed meets specifications	☐ yes ☐ no	
☐ Ball valve/valve box/box cover have been installed upstream of connection point to low pressure sewer main	☐ yes ☐ no	_____
☐ Check valve has been installed along discharge line	☐ yes ☐ no	_____
☐ Check valve meets specifications	☐ yes ☐ no	_____
☐ Discharge line installed is a minimum of 5 feet from property line	☐ yes ☐ no	_____
DISCHARGE LINE		☐ Approved ☐ Not Approved

IV. SERVICE LINE

☐ New service line has been installed from grinder pump station to connection point into existing service line at a slope of 2% or greater	☐ yes ☐ no	_____
☐ Service line material meets specifications	☐ yes ☐ no	_____
☐ All existing service lines have been exposed	☐ yes ☐ no	_____
☐ Existing service line needs to be replaced back to foundation wall	☐ yes ☐ no	_____
NEW AND EXISTING SERVICE LINE		☐ Approved ☐ Not Approved

V. DISCHARGE LINE TESTING

☐ End of discharge line has been plugged	☐ yes ☐ no	_____
☐ Discharge line was pressure tested for at least one hour with no loss of pressure at 1 ½ times working pressure or a minimum of 50 psi	☐ yes ☐ no	_____
DISCHARGE LINE TESTING		☐ Approved ☐ Not Approved

Comments

Comments:

_____

_____

_____

_____

_____
Inspector's Name

_____
Date

_____
Inspector's Signature

Section 6 SPECIFICATIONS

All private property improvements shall meet the enclosed specifications to obtain approval from the City.

SECTION 03300

CONCRETE

PART 1 GENERAL

1.01 SUMMARY

A. Section includes:

1. Concrete for Anti-Flotation anchor around grinder pump basin.

2. Concrete anti-flotation anchor shall be sized according to the manufacturer's recommendations.

3. Concrete anti-flotation anchor shall be pre-cast to the grinder pump station, or poured in place.

4. If the concrete anti-flotation anchor is poured in place, the unit shall be leveled, and filled with water, to the bottom of the inlet, to help prevent the unit from shifting while the concrete is being poured. The concrete must be manually vibrated to ensure there are no voids.

5. Concrete shall be Fastset Concrete mix (#1004-51) as manufactured by the Quikrete Companies, or equal.

1.02 QUALITY ASSURANCE

A. Codes and Standards: Comply with provisions of the latest editions of the following codes, specifications and standards, except where more stringent requirements are shown or specified:

1. ASTM C 39: Compressive Strength of Cylindrical Concrete Specimens

2. ASTM C 191: Setting Time of Hydraulic Cement

3. ASTM C 882: Slant Shear Bond Strength

4. ASTM C928: Rapid Hardening Cementitious Materials for Concrete Repairs

PART 2 PRODUCTS

1.03 CONCRETE MATERIALS

A. Performance and Physical Properties at 73 degrees F and 50 percent relative humidity:

1. Compliance: ASTM C 928 R-3 specifications

2. Set Time, ASTM C 191: 25-45 minutes

3. Compressive Strength, ASTM C39: 3000 psi (20.7 MPa) @ 3 hours,

4. 5000 psi (34.5 MPa) @ 24 hours, 6000 psi (41.3 MPa) @ 7 days and 7000 psi (48.3 MPa) @28 days

5. Slant Shear Bond Strength, ASTM C 882: 1000 psi (6.9 MPa) @ 24 hours, 1500 psi (10.3 MPa) @ 7days

6. Shrinkage ASTM C 928: 28 days in air > - 0.15%, 28 days in water < +0.15%

7. Application thickness: 1 ½" (38 mm) to 24" (610 mm)

PART 3 EXECUTION

2.01 MIXING

A. Comply with manufacturer's printed instructions and the following:

1. Material should be mechanically mixed for a maximum of 3-4 minutes using a barrel-type concrete mixer or a standard mortar mixer.

2. Add 3 quarts (2.8L) of clean water for each 70lb (31.8 kg) bag. Add the powder to the water and mix to a stiff cohesive consistency. If more water is needed to achieve a firm workable mix, add small amounts at a time and continue to mix until the desired consistency is achieved. Do not exceed a total volume of 1 gallon (3.8 L) of water for each 70lb (31.8 kg) bag. Do not mix more material than can be placed in 15 minutes.

3. Do not re-temper with additional water.

2.02 APPLICATION

A. Consolidate the material using hand tamping and/or chopping with a shovel. Compact around the edges of the basin.

B. D. Do not apply if temperatures are below 40°F (4°C) or are expected to go below 32° (0° C) within a 24 hour period. Use cold water in hot weather or hot water in cold weather to achieve desired grout temperature.

2.03 CURING

A. No special curing is required.

END OF SECTION

SECTION 11200

PACKAGE GRINDER PUMP STATION

PART 1 GENERAL

1.01 SCOPE

A. Grinder Pump Station shall be one of the following:

1. Environment/One Company, Model DH-071 grinder pump station
2. Delta Environmental Products, DGF12 system with D1P20-21 grinder pump
3. Crane Pumps & Systems Barnes, EcoTRAN system with Omni Grind Plus pump

PART 2 PRODUCTS

2.01 GENERAL CONSTRUCTION

A. Control Panel:

Control panel supplied shall be by grinder pump station manufacturer.

Control panel shall include NEMA L10-30 receptacle with weather tight cover for generator connection.

Control panel shall contain a 30 amp power relay which will automatically switch the pump station from the normal power source to the generator receptacle any time the receptacle is powered.

PART 3 EXECUTION

3.01 INSTALLATION

A. Installation procedures shall be as recommended by the grinder pump station manufacturer, the Hydraulic Institute Standards, and as required herein.

3.02 FACTORY PERFORMANCE TESTING

A. Factory pump test results for comparable pumps shall be submitted to City.

3.03 MANUFACTURER'S INSTALLATION AND START-UP SERVICES

A. A factory-trained technician to perform installation, start-up, and field testing services can be requested by the property owner at the property owner's expense.

B. After grinder pump installation, prior to backfilling, the Contractor shall call City for an inspection. The inspection checklist located within the design and construction manual will be filled out by the City. After grinder pump installation has been approved, the grinder pump can be tested and backfilled.

3.04 WARRANTY AND GUARANTEE

A. The manufacturer shall supply a standard one (1) year warranty for the grinder pump station. Any extended warranties shall be purchased by the property owner.

END OF SECTION

SECTION 18110

PIPE AND PIPE FITTINGS

PART 1 GENERAL

1.01 SUMMARY

A. Provide all pipe and fittings required to install discharge lines and new service lines to the grinder pump stations.

1.02 REFERENCES

A. Pipe and fittings shall be designed and tested in accordance with manufacturers' recommended procedures and the following codes and applicable standards:

1. American National Standards Institute (ANSI):

A21.11	-	Rubber Gasket Joints for Cast-Iron and Ductile-Iron Pressure Pipe and Fittings.
A21.15	-	Flanged Cast-Iron and Ductile-Iron Pipe with Threaded Flanges.
A21.51	-	Ductile Iron Pipe, Centrifugally Cast, in Metal Molds or Sand-Lined Molds for Water or Other Liquids.
B16.1	-	Cast-Iron Pipe Flanges and Flanged Fittings, 25, 125, 250 and 800 Pound
B16.3	-	Malleable Iron Screwed Fittings, 150 and 300 Pound.
B16.5	-	Steel Pipe Flanges and Flanged Fittings.
B16.9	-	Factory-Made Wrought Steel Butt Welding Fittings.
B16.11	-	Forged Steel Fittings, Socket Welding and Threaded.
B16.21	-	Nonmetallic Gaskets for Pipe Flanges.
B16.22	-	Wrought Copper and Bronze Solder Joint Pressure Fittings.
B16.25	-	Butt Welding Ends.

2. American Society for Testing and Materials (ASTM):

A120	-	Black and Hot Dipped Zinc-Coated (Galvanized) Welded and Seamless Pipe for Ordinary Uses.
A182	-	Forged and Rolled Alloy Steel Pipe Flanges, Forged Fittings, and Valves and Parts for High Temperature Service.
A307	-	Carbon Steel Externally and Internally Threaded Standard Fasteners.
A536	-	Ductile Iron Castings.
A674	-	Polyethylene Encasement for Gray and Ductile Cast-Iron Pipe for water or other Liquids.
A746	-	Standard for Ductile Iron Gravity Service Pipe.
D1248	-	Polyethylene Plastic Molding and Extrusion Materials.
D1784	-	Rigid Polyvinyl Chloride Compounds and Chlorinated Polyvinyl Chloride Compounds.
D1785	-	PVC Schedule 40 Pipe
D2310	-	Machine Made Reinforced Thermosetting Resin Pipe.
D2321	-	Underground Installation of Thermoplastic Pipe for Sewers and Other Gravity Flow Applications
D2466	-	Socket Type PVC Schedule 40 Plastic Fittings

D2564 - PVC Solvent Cements
D2855 - Making Solvent Cemented Joints with PVC Pipe and Fittings
D2997 - Centrifugally Cast Reinforced Thermosetting Resin Pipe.
D3034 - Type PSM Polyvinyl Chloride (PVC) Sewer Pipe and Fittings (4" through 15").
D3035 - Polyethylene Plastic Pipe Based on Controlled Outside Diameter
F714 - Polyethylene Plastic Pipe Based on Outside Diameter

3. American Water Works Association (AWWA):

C105 - Polyethylene Encasement for Gray and Ductile Iron Piping for Water and Other Liquids.
C110 - Gray-Iron and Ductile-Iron Fittings, 3-inch through 48-inch, for Water and Other Liquids.
C111 - Rubber-Gasket Joints for Cast-Iron and Ductile-Iron Pressure Pipe and Fittings.
C115 - Flanged Cast-Iron and Ductile-Iron Pipe with Threaded Flanges.
C150 - Thickness Design of Ductile Iron Pipe.
C151 - Ductile Iron Pipe, Centrifugally Cast in Metal Molds or Sand-Lined Molds, for Water or Other Liquids.
C153 - Ductile Iron Compact Fittings.
C600 - Installation of Ductile Iron Pipe.
C900 - Polyvinyl Chloride Pressure Pipe.
C950 - Glass-Fiber-Reinforced Thermosetting-Resin Pressure Pipe.

4. American Society of Mechanical Engineers (ASME):

B31.1 - Code for Pressure Piping, Power Piping Section
ASME Boiler Code - Section 1.

5. National Bureau of Standards, Voluntary Products Standard (NBS):

PS15-69 - Custom Contact-Molded Reinforced-Polyester Chemical-Resistant Process Equipment.

1.03 COMPLIANCE SUBMITTALS

A. Submit cut sheets on discharge piping and service line piping to City for approval.

B. Submit cut sheets on all fittings and accessories required for discharge piping and service line piping to City for approval.

1.04 JOB CONDITIONS

A. Discharge lines shall be installed a minimum of 42 inches below grade.

B. Service lines shall be installed at a 2% slope or greater from the building to the grinder pump station.

PART 2 PRODUCTS

2.01 ACCEPTABLE MANUFACTURER

A. PVC Schedule 40 Discharge Piping:

1. JM Eagle, Inc.

2. Northern Pipe Products.

3. Or approved equal.

B. HDPE Discharge Piping:

1. JM Eagle, Inc.

2. Oxford Plastics, Inc.

3. ISCO Industries

4. Or approved equal

C. Gravity Service Line Piping:

1. Certainteed Corporation.

2. Northern Pipe Products

3. Or approved equal.

2.02 MATERIALS

A. Discharge Line Piping and Fittings:

Discharge line can be either PVC Schedule 40 pipe or HDPE pipe.

1. PVC Schedule 40

a. All PVC Schedule 40 pipe shall be manufactured from a Type I, Grade I polyvinyl Chloride (PVC). The pipe shall be manufactured in strict compliance to ASTM D1785 and D2665, consistently meeting and/or exceeding the quality assurance test requirements of these standards with regard to material, workmanship, burst pressure, flattening, and extrusion quality.

b. All plastic pipe shall be approved by and bear the National Sanitation Foundation seal of approval and will comply with the requirements for Class 12454-A or Class 12454-B virgin components as defined in ASTM D1784 with an estimated hydrostatic design basis (HDB) rating of 4000 psi (27.58 MPa) for liquid at 73.4°F (23°C).

c. All fittings shall be socketed type, manufactured in accordance with ASTM 2466.

d. PVC pipe and socketed fittings shall be joined by cold welding through the use of solvent-based cements manufactured in accordance with the pipe manufacturer's recommendations and generally inconformity with the recommended practice for making solvent-cemented joints described in ASTM D2855.

e. Fittings for Pipe.

f. Fittings shall conform to ASTM D1785 and ASTM D2466 and be of the same (or higher) pressure rating as the pipe line.

g. Thrust blocks shall be used on all Schedule 40 fittings. Thrust shall be per detail.

2. HDPE:

a. General: Furnish maximum pipe lengths normally produced by the manufacturer, except for fittings, closures, and specials. Only solid wall HDPE pipe in accordance with ASTM F714 shall be used. HDPE profile wall pipe and fittings shall not be used.

b. Materials: The pipe shall be high performance, high molecular weight, high density polyethylene pipe, Driscoplex 4200 by CP Chem Performance Pipe, a division of Chevron Phillips Chemical Company, Plano, Texas, and shall conform to ASTM D1248 (Type III, Class C, Category 5, P34). Minimum cell classification shall be 345434 C as referenced in ASTM D 3350-84.

c. Design: Pipe supplied under this specification shall have a nominal IPS (Iron Pipe Size) OD. The SDR (Standard Dimension Ratio) of the pipe shall be SDR 11, 160 psi.

d. Joints: Low pressure flow systems shall be joined by use of the heat fusion technique of butt fusion resulting in a monolithic pipe. All joints shall be fully restrained and as strong as the pipe in both tension and hydrostatic loading. The joining of pipes of dissimilar materials shall be made using approved transition coupling, and shall provide a permanent and watertight connection which will withstand the hydrostatic test pressure.

e. Fittings: The fittings for low pressure systems shall be molded from a polyethylene compound having a cell classification equal to or exceeding the compound used in the pipe or shall be manufactured using a polyethylene compound having a cell classification equal to or exceeding the compound used in the pipe supplied under this specification. All fittings supplied under this specification shall be of the same manufacturer as the pipe being supplied. Minimum cell classification shall be 345434 C as referenced in ASTM D3350-84.

B. Polyvinyl Chloride (PVC) Gravity Service Line Pipe and Fittings:

1. PVC sewer service line pipe and fittings, 4-inch in size, shall conform to ASTM D-3034, SDR 35.

2. All PVC sewer service line pipe and fittings shall be made of PVC plastic having a cell classification of 12454-B or 12454-C, as defined by ASTM D1784.

3. Molded fittings shall be supplied with factory-installed gaskets and shall be suitable for use with SDR-35 gravity sewer pipe. Fittings shall not deflect more than pipe when loaded and bedded in the same manner.

4. All 90° bends shall be accomplished by using two 45° bends.

PART 3 EXECUTION

3.01 INSTALLATION

A. Install pipe in accordance with Section 18160.

3.02 APPROVAL

A. The Contractor shall install the grinder pump, control panel, discharge line, and service line. The discharge line shall be connected into the existing stub-out from the main line. The ball valve on the discharge line shall remain closed until system has been inspected and approved by the City. The service line shall be installed up to the connection point into the existing service line. The service line shall not be connected into the existing service line until the system has been inspected and approved by the City. The grinder pump, the discharge line connection into the main, and the service line shall not be backfilled until the system has been inspected and approved by the City.

B. After the Contractor has installed the grinder pump, control panel, discharge line, and service up to the connection into the existing service line, prior to backfilling, the Contractor shall call the City for an inspection.

C. The City will conduct an inspection. The City will fill out the private property inspection checklist. The City will verify the discharge testing. If all components are installed properly, and the discharge testing is approved, the remaining construction and testing can proceed.

D. The service line may then be connected into the existing service line and all items backfilled. Startup, testing, cleanup, demolition of septic tank, and opening of the ball valve can then be completed.

END OF SECTION

SECTION 18160

PIPE INSTALLATION

PART 1 GENERAL

1.01 SUMMARY

A. This section includes installation and testing of discharge lines and service lines from the grinder pump.

1.02 REFERENCES

A. American Society for Testing and Material (ASTM):

1. C12 - Installation of Vitrified Clay Pipe Lines.
2. C828 - Low Pressure Air Test of Vitrified Clay Pipe Lines.
3. D2774-04 - Standard Practice for Underground Installation of Thermoplastic Pressure Pipe
4. D2321-04 - Standard Practice for Underground Installation of Thermoplastic Pipe for Sewers and Other Gravity-Flow Applications

B. American Society of Mechanical Engineers (ASME):

1. B31 - Code for Pressure Piping.
2. B31.1 - Power Piping Section.
3. Boiler Code - Section 1.

C. American Water Works Association (AWWA):

1. C105 - Polyethylene Encasement for Gray and Ductile Cast-Iron Piping for Water and Other Liquids.
2. C206 - Field Welding of Steel Water Pipe.
3. C600 - Installation of Gray and Ductile Cast Iron Water Mains and Appurtenances.
4. C651 - Disinfecting Watermains.
5. M11 - Steel Pipe Design and Installation.

PART 2 PRODUCTS

2.01 AS SPECIFIED IN DIVISION 18, SECTION 18110 AND DETAILS

PART 3 EXECUTION

3.01 INSTALLATION - BELOW GROUND PIPING

A. Discharge and Service Line Piping

1. Utilize equipment, methods, and materials ensuring proper installation to depths and grades indicated.

   a. Maintain a minimum of 42 inches of cover from existing grade to top of discharge pipe.

b. Maintain a slope of 2% or greater from the existing service line or foundation wall, to the grinder pump station.

c. Do not lay pipe on blocks unless pipe is to receive total concrete encasement.

d. Accomplish horizontal and vertical curve alignments with fittings and pipe defections. Limit joint deflection with ductile-iron pipe and fittings to conform to AWWA C600. Deflection may, with approval, exceed standard deflections by utilizing machined bells. Deflections for PVC pipe joints shall not exceed the manufacturer's recommendations.

2. Install pipe of size, materials, strength class, and joint type as specified in Section 18110, with embedment as indicated on Discharge Line Installation Detail within this Design and Construction Manual.

3. Insofar as possible, commence laying at downstream end of line and install pipe with spigot ends in direction of flow.

4. Clean interior of all pipe, fittings, and joints prior to installation. Exclude entrance of foreign matter if work is suspended or stopped.

   a. Close open ends of pipe with snug-fitting closures.

   b. Do not let water fill trench. Include provisions to prevent flotation should water control measures prove inadequate.

   c. Remove water, sand, mud and other undesirable material from trench before removal of end cap.

5. Brace or anchor as required to prevent displacement after establishing final position.

6. Perform only when weather and trench conditions are suitable. Do not lay in water.

7. Separation of Water Mains and Sanitary Sewers:

   a. Horizontal Separation. Whenever possible, any sanitary sewer shall be laid at least 10 feet, horizontally, from a water main. The distance shall be measured from edge-to-edge. When local conditions prevent a lateral separation of 10 feet, a sanitary or storm sewer may be laid closer than 10 feet to a water main provided that the sanitary is laid at least 18 inches below the bottom of the water line.

   b. Vertical Separation: Whenever sanitary sewers or house sewers must cross water mains, the sewer shall be laid at such an elevation that the outside bottom of the water main is no closer than 18 inches above the outside of the top of the sewer. This vertical separation shall be maintained for that portion of the sanitary sewer or house sewer located within 10 feet, horizontally, of any water line it crosses. The crossing shall be arranged so that the sewer joints will be equal distance and as far as possible from the water main joints.

c. Separation to Force Mains: There shall be at least a 10-foot horizontal separation between water mains and sanitary sewer force mains, and they shall be in separate trenches. In areas where these separations cannot be obtained, either the water line or the sewer line shall be cased in a continuous casing.

B. Jointing:

1. General Requirements:

a. Locate joint to provide for differential movement at changes in type of pipe embedment, impervious trench checks, and structures. Joint to be not more than 2 feet from structure wall, unless supported by concrete cradle structurally continuous with base slab or footing. .

b. Perform in accordance with manufacturer's recommendations.

c. Clean and lubricate all joint and rubber gasket surfaces with lubricant recommended.

d. Utilize methods and equipment capable of fully homing or making up joints without damage.

e. Check joint opening and deflection for specification limits.

C. Cutting Pipe:

1. Cut in neat manner without damage to pipe.

2. Remove burrs and sharp edges and smooth the pipe end by grinding.

3. Repair lining where required and as approved.

D. Closure Pieces:

1. Connect two segments of pipeline or a pipeline segment and structure with short sections of pipe fabricated for the purpose.

2. Locations of joints, types of joints, and pipe materials and strength classifications shall comply with specifications.

3. May be accomplished with sleeve couplings:

a. Of length such that gaskets are not less than 3" from pipe ends.

b. Include spacer ring identical to pipe end such that clear space in closure does not exceed 1/4".

E. Remove plugs from existing low pressure sewer main pipe in order to complete connections to low pressure sewer main existing pipe.

F. Furnish and install test plugs where necessary to properly complete discharge testing.

1. Test plugs shall be as manufactured by pipe supplier.

2. Plugs shall be push-on, flanged, mechanical joint or restrained as required for ductile iron pipe and shall be watertight against heads equal to the specified test pressure.

3. Secure plugs in place to facilitate removal when required to connect pipe.

4. Restrain plugs to fittings where necessary.

G. Restrained joints or thrust blocks shall be installed where required to counteract internal pressure forces.

H. Install thrust blocks in accordance with detail.

3.02 CONNECTIONS WITH EXISTING LOW PRESSURE SEWER MAIN

A. The ball valve and valve box may already be installed on some properties. If this is the case, Connections between private property improvements and the low pressure sewer main shall be made per details. The connection to the low pressure sewer main shall not be made until all inspections and testing have been approved by the City.

B. For Connection to Dissimilar Pipe Materials. Where the discharge piping is to be connected to the low pressure sewer main and they are of dissimilar pipe materials, the connection shall be made by means of a transition coupling.

3.03 FIELD TESTING

A. Pressure Tests:

1. The Contractor shall furnish all pumps, piping, labor and other materials and services necessary to bring the piping up to the specified test pressure.

2. All pipes shall be pressure tested. Pipes which will be pressurized under normal operating conditions shall conform to the requirements of the hydrostatic pressure test. All other piping shall meet the requirements of the air leakage test.

3. Pipe in the sections to be tested shall not be backfilled until testing has been completed and approved by the City.

B. Hydrostatic Pressure Test:

1. Discharge Line:

a. Test connections shall be made and the pipe filled with water. A pressure of not less than 1.5 times the normal operating pressure (for the lowest point on the pipe line) but not less than 50 pounds per square inch (psi) shall be used for testing.

b. After air removal, water shall be pumped in to bring the pipe to the specified pressure. After one hour, additional water shall be drawn from a container of known volume. The amount of water required to return the system to the specified pressure shall not exceed the amount determined by the following formula:

$$Q = SD(P)^{1/2}/133000,$$

Where Q - Total allowable leakage in two hours, gallons.
S - Length of section tested, feet.
D - Nominal pipe diameter, inches.
P - Test pressure, psi.

c. All exposed pipe, fittings, valves, hydrants and joints shall be inspected and all evidence of moisture appearing on the surface of the ground during the test shall be investigated by the Contractor by excavation where the pipe has been covered with backfill. Should the leakage test results exceed allowable leakage, the test pressure shall be maintained for an additional period of time to facilitate location of leaks.

d. All pipe, fittings, valves, pipe joints, hydrants, and other materials which are found to be defective when the pipe line is tested shall be removed from the line immediately and replaced with new and acceptable material by and at the expense of the Contractor. The pressure test shall be repeated after repairing leaks and other defective work until the pipe line installation conforms to specified requirements and is accepted by the City.

3.04 PIPING AND TEST SCHEDULE

A. Discharge and service line piping shall be installed in accordance with the following schedule.

B. The Contractor may, at his expense, furnish piping of the same material as shown in the PIPING SCHEDULE but of greater pressure rating than that specified.

C. Where bell and spigot joints are indicated on the plans or specified, mechanical joints or push-on joints may be used.

PIPING SCHEDULE

Use	Piping	Joint/Fittings	Test Pressure
Discharge Piping	HDPE SDR 11 or PVC Schedule 40	Fusion Welded or Socketed joined by cold welding	50 psi

3.05 INSPECTION

A. Inspection of pipe and fittings will be conducted by the City after piping is installed prior to backfill.

3.06 ACCEPTANCE

A. Pipe will be inspected by the City for approval as specified in manual and Division 18, Section 18110.

END OF SECTION

Section 7 DETAILS

All private property improvements shall meet the enclosed details to obtain approval from the City.

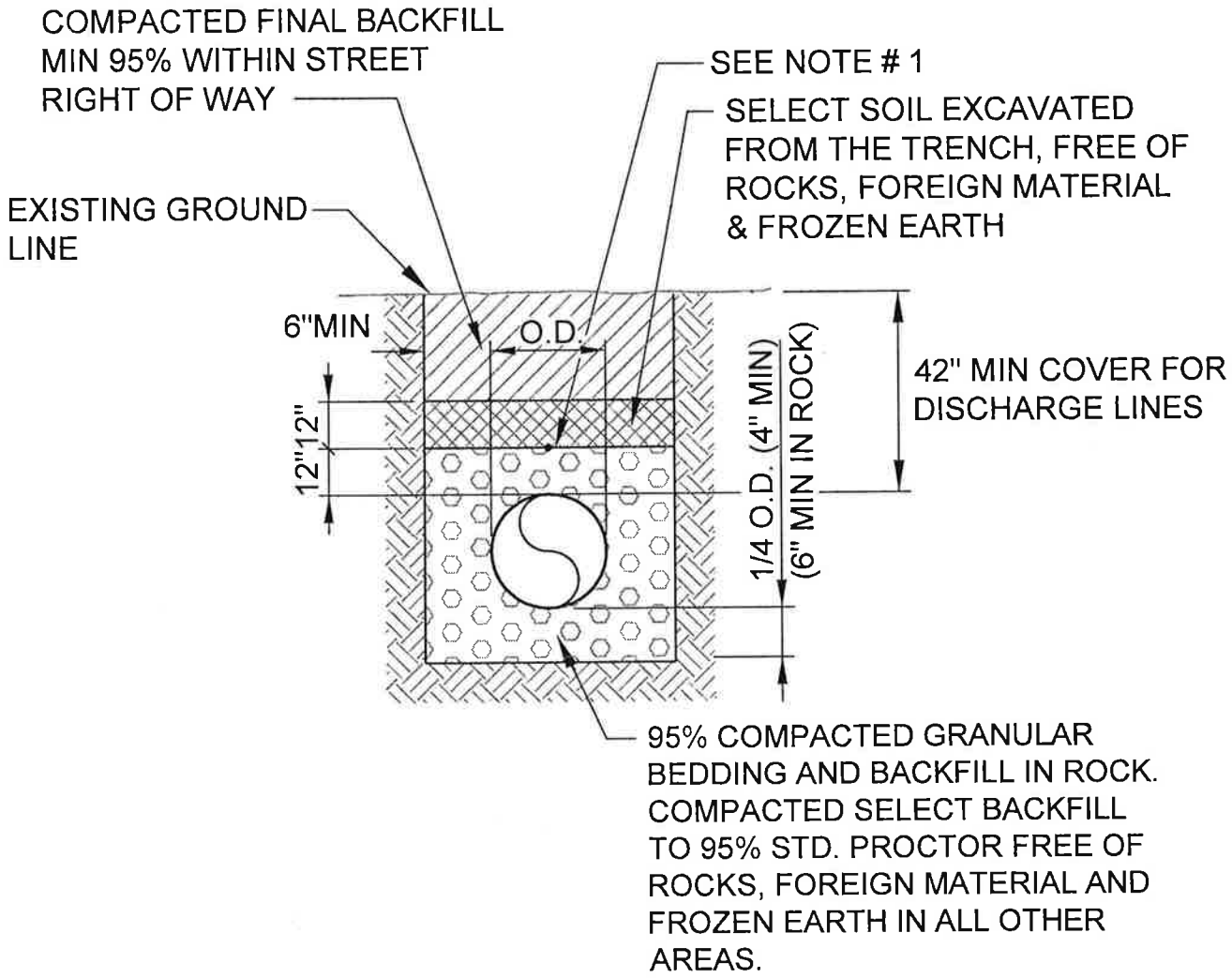

NOTES:

1. TRACER WIRE FOR DISCHARGE PIPING, HIGH MOLECULAR WEIGHT - POLYETHYLENE TRACER WIRE, 1-#14 AWG, BY PAIGE ELECTRIC OR APPROVED EQUAL. SPLICING SHALL BE WITH 3M DBY/DBR DIRECT BURY SPLICE KITS.

2. MARKING TAPE NOT REQUIRED WHEN DIRECTIONAL DRILLING. TRACER WIRE SHALL BE PULLED WHEN THE DIRECTIONAL DRILLING IS UTILIZED.

3. TWO 45° BENDS SHALL BE USED TO ACCOMPLISH A 90° BEND.

DISCHARGE LINE INSTALLATION DETAIL

NOT TO SCALE

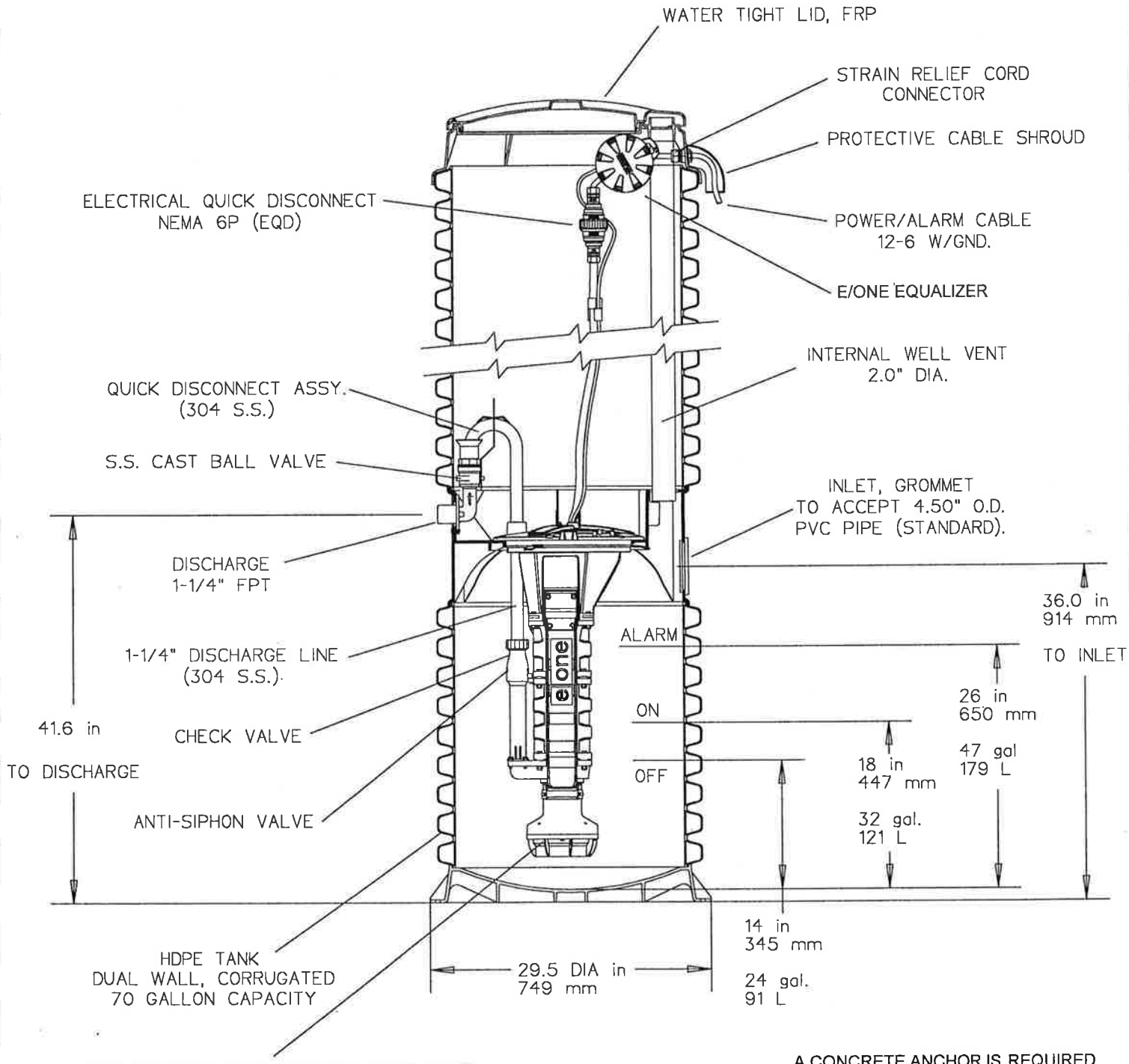

A CONCRETE ANCHOR IS REQUIRED ON ALL OUTDOOR MODEL DH071 STATIONS CONCRETE ANCHOR SHALL BE PER MANUFACTURER'S RECOMMENDATIONS AND PER SECTION 03300 OF THE DESIGN AND CONSTRUCTION MANUAL SPECIFICATIONS

ENVIRONMENT ONE GRINDER PUMP STATION

MODEL DH-071

NOT TO SCALE

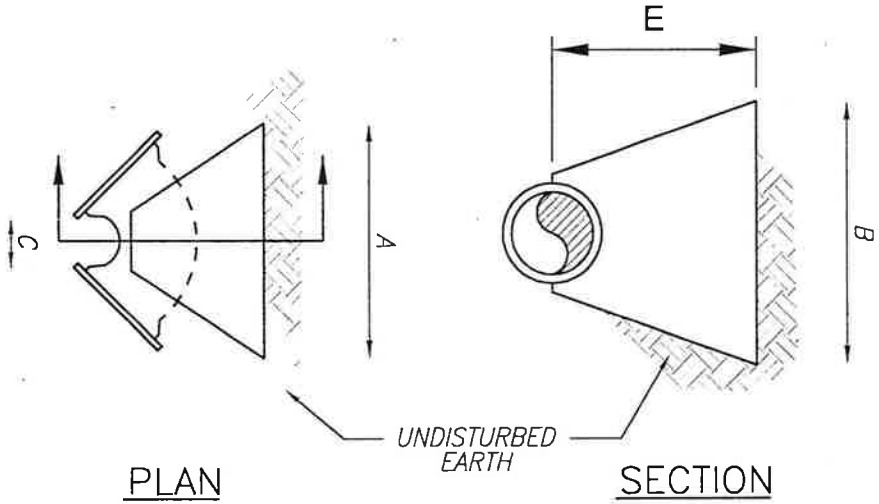

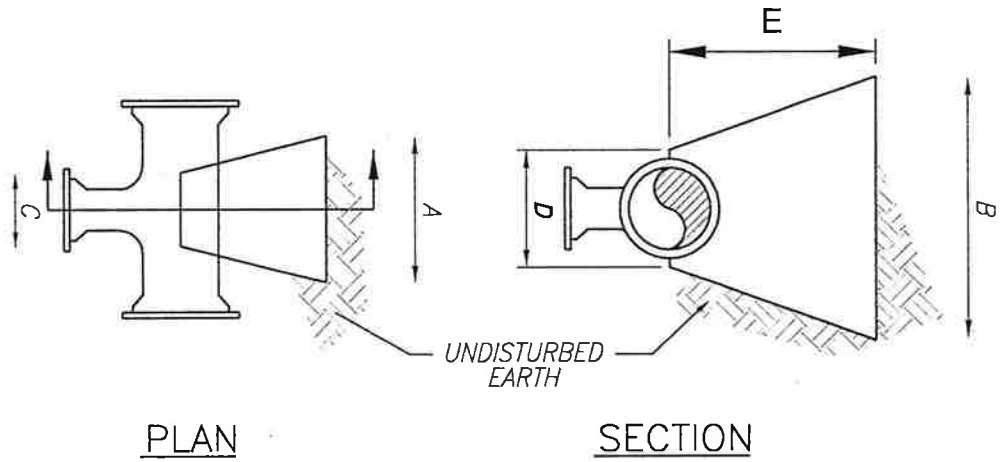

SIZE/FITTING		A	B	C	D	E	V
1-1/4"	22.5°	8	8	8	8	6	0.2
	45°	14	8	8	8	12	0.6
	90° *	16	12	8	8	12	0.9
	TEE/PLUG	12	12	8	8	12	0.7

UNITS A THRU E ARE IN INCHES.

* NOTE: USE 2-45° BENDS IN LIEU OF 90° BEND.

NOTE:

1. V=VOLUME OF CONCRETE REQUIRED FOR THRUST BLOCKS CONSTRUCTED TO LINES SHOWN. (CUBIC FEET)

2. THRUST BLOCKS ARE BASED ON A WORKING PRESSURE OF 100 P.S.I. PLUS 50% SURGE, AND AN ALLOWABLE SOIL BEARING PRESSURE OF 2000 P.S.F.

3. DO NOT COVER JOINTS WITH CONCRETE. 4. USE 3/8" PLYWOOD SEPARATOR BETWEEN BLOCKS AND PLUGS TO PROVIDE FOR FUTURE REMOVAL.

4. INSTALL AT ALL BURIED TEES, ELBOWS, BENDS, AND DEAD ENDS.

5. PLACE AGAINST UNDISTURBED EARTH.

THRUST BLOCK DETAILS
FOR PVC SCHEDULE 40 DISCHARGE PIPING
NOT TO SCALE

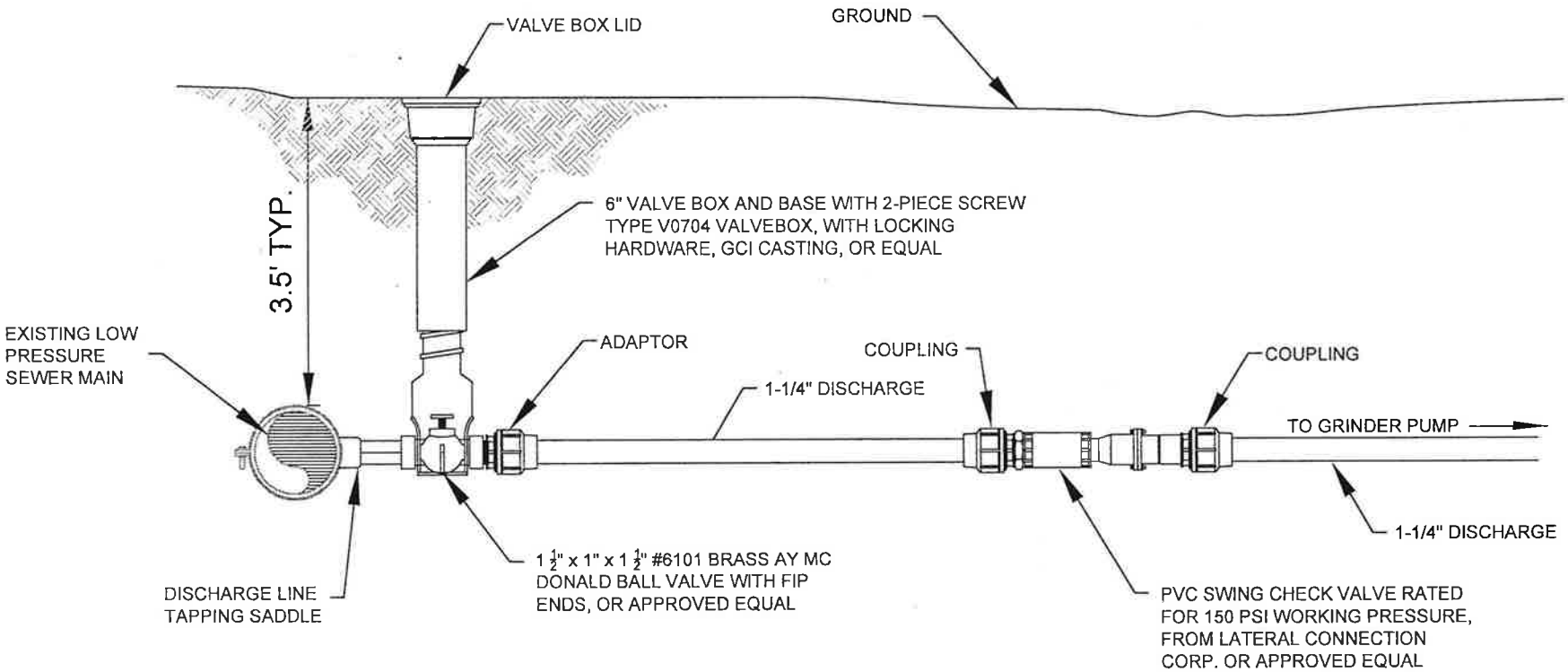

NOTES:

1. DISCHARGE PIPING SHALL BE SUBJECT TO AIR TEST PER THE SPECIFICATIONS.

2. LOCATION OF BALL VALVE (IN LOW PRESSURE SEWER):

   A. IF THE MAIN AND THE HOUSE ARE ON THE SAME SIDE OF THE STREET, INSTALL THE SHUT OFF VALVE NEAR THE MAIN.

   B. IF THE MAIN AND THE HOUSE ARE ON OPPOSITE SIDES OF THE STREET, INSTALL THE SHUT OFF VALVE NEAR PROPERTY LINE.

3. BALL VALVE AND VALVE BOX MAY ALREADY BE INSTALLED ON SOME PROPERTIES. IF THIS IS THE CASE, THEN THE END CAP WILL NEED TO BE REMOVED AND THE DISCHARGE LINE CONNECTED INTO STUB-OUT.

DISCHARGE LINE INSTALLATION WITH BALL VALVE AND CHECK VALVE

NOT TO SCALE

Section 8 APPROVED CONTRACTORS

CITY OF LEE'S SUMMIT, MISSOURI
PRAIRIE LEE LAKE
LOW PRESSURE SEWER SYSTEM

APPROVED CONTRACTOR LIST FOR PRIVATE PROPERTY IMPROVEMENTS

To be completed with contractors interested in the project

CITY OF LEE'S SUMMIT, MISSOURI
PRAIRIE LEE LAKE
LOW PRESSURE SEWER SYSTEM

SITE PLAN SUBMITTAL
COVER SHEET

The contractor shall submit to the City of Lee's Summit, Missouri: Public Works, attn. Ray Seidelman, 220 SE Green Street, Lee's Summit, Missouri 64063, three copies of this form, a Site Plan, and material cut sheets, for review and approval.

A. Submittal Date: April 10, 2009

Site Address: 1615 Ne Ozark Drive

City, Street, & Zip: Lee's Summit, MO 64086

B. Home Owner

Name: Jane Doe

Address: 1615 Ne Ozark Drive

City, Street, & Zip: Lee's Summit, MO 64086

Phone Number: 816-988-8888

Alternate Phone Number: 816-999-9999

C. Contractor or Plumber

Contact Name: John Bellerive

Company Name: Haynes Equipment Co., Inc.

Address: 15725 Pflumm Road

City, State & Zip: Olathe, KS 66062

Phone Number: 913-782-4962

Fax Number: 913-782-5894

-End-

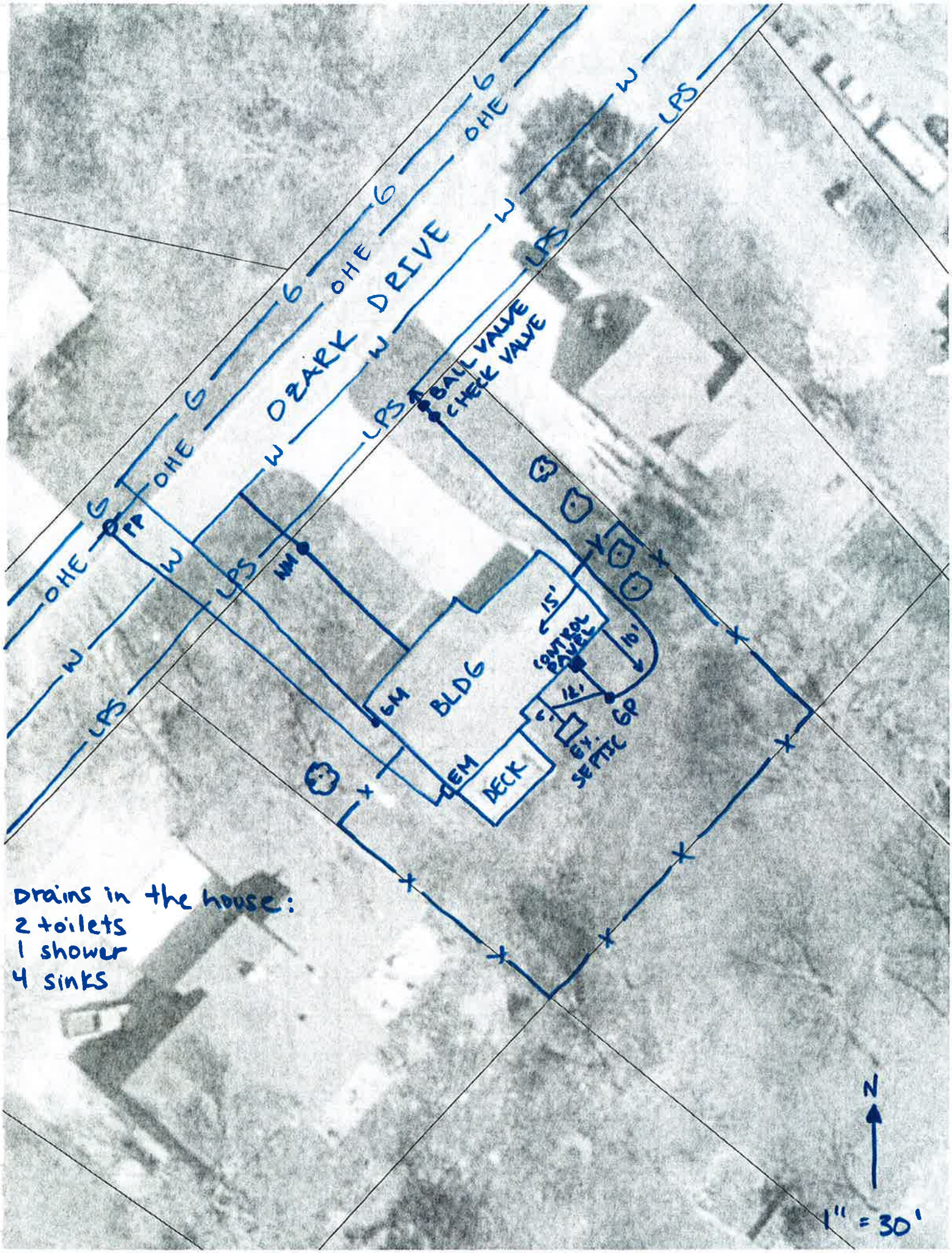

Drains in the house:
2 toilets
1 shower
4 sinks

OPTIONS : ☐ DH071 (HARD WIRED LEVEL CONTROLS)
☐ DR071 (WIRELESS LEVEL CONTROLS)

FIELD JOINT REQUIRED
FOR MODELS
DH071-129 / DR071-129
&
DH071-160 / DR071-160

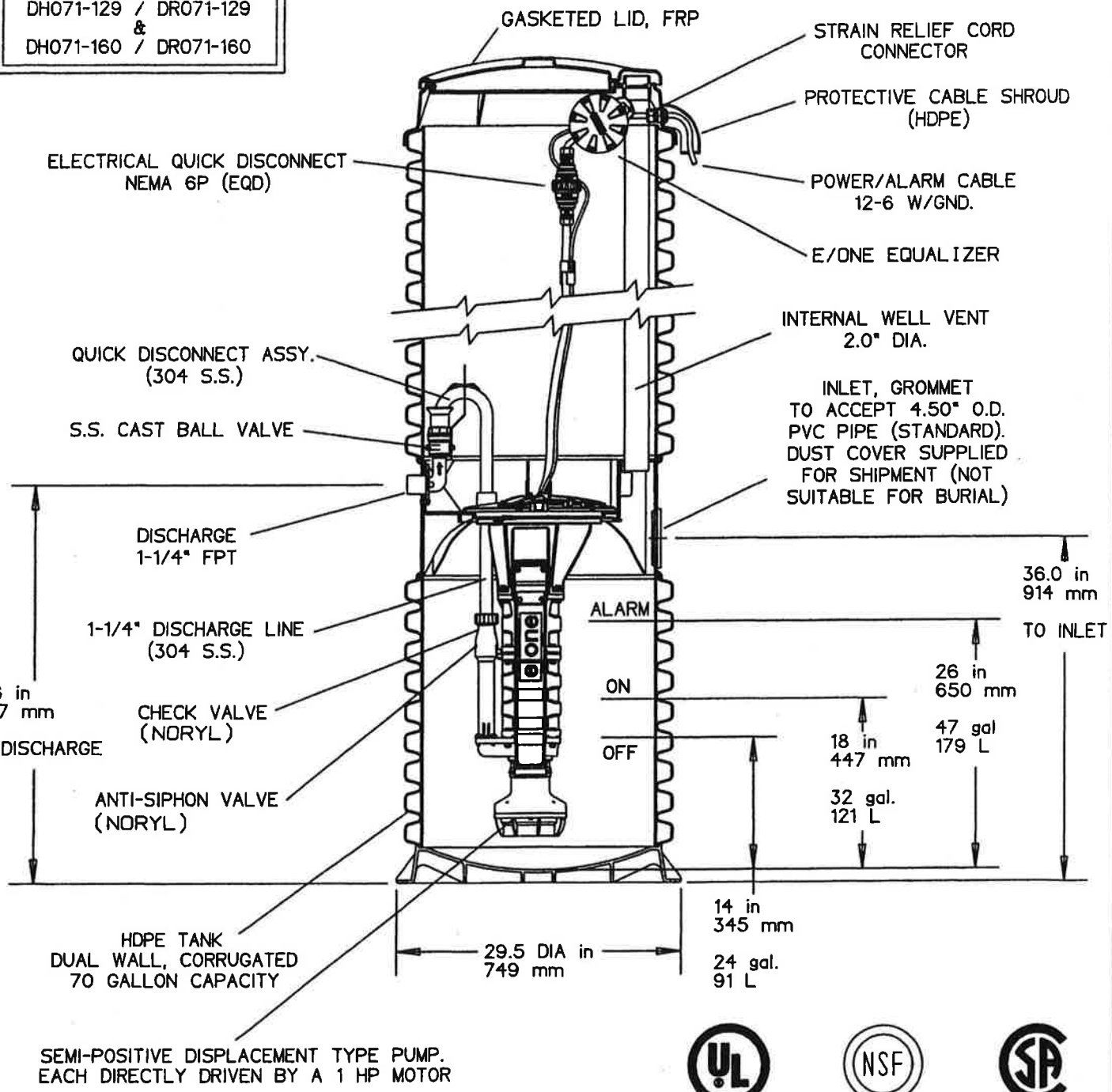

CONCRETE BALLAST MAY BE REQUIRED
SEE INSTALLATION INSTRUCTIONS
FOR DETAILS

AD	CH	07/12/07	A	
DR BY	CHK'D	DATE	ISSUE	SCALE

e one SEWER SYSTEMS

MODEL DH071 / DR071
DETAIL SHEET

NA0050P02

e/one sentry

Custom Alarm Panels for E/One Low Pressure Sewer Systems

The World's Best Low Pressure Sewer System Sets a New Standard in Reliability and Convenience

e one
SEWER SYSTEMS

e/one sentry

The Sentry line of alarm panels is custom designed for use with E/One grinder pump systems. **The E/One Sentry™ alarm panels provide the latest technology and the greatest flexibility** in customizing features to satisfy individual needs. The new alarm panels can be configured to provide functions ranging from basic alarm indication to advanced warning of pending service requirements. In between, **there are numerous features available** including an event counter; run-time meter; service disconnect capability; and remote alarm indication.

Like the E/One grinder pump station, all panels are UL and CSA listed and meet all applicable NEC and NFPA codes and standards. Furthermore, all E/One Sentry alarm panels are housed in NEMA 4X lockable enclosures, suitable for mounting on a wall or a post.

The basic E/One Sentry panel provides features essential to any installation:

A. Circuit breakers for pump power and alarm circuits
B. Audible high level alarm indication
C. Visual high level alarm indication
D. High level alarm silence switch
E. Manual Run switch
F. Redundant "Start" function with high level alarm
G. Run indicator to show when pump is operating

THE E/ONE REMOTE SENTRY DISPLAY MODULE provides visual and audible indication when the water level inside the grinder pump tank reaches a predetermined "high" level during normal operation, or in the event of a power outage (with hard-wired version of *Extreme* core and optional contacts in panel). It is ideally suited for installations where the outdoor alarm panel location is obstructed from view, or where an Indoor Unit (IDU) installation is isolated in a utility room.

The Remote Sentry includes:

- A low profile attractive case (5.4"W x 3.69"H x 1.25"D)
- Lithium battery
- Audible alarm (70dB)
- Push-to-silence audible alarm switch
- Push-to-test visual and audible alarm

Now Available in Two Upgrades

E/ONE SENTRY PROTECT

The E/One Sentry Protect panel provides important protection from external conditions that could otherwise prove damaging to the E/One grinder pump station.

Adding the Protect option to the E/One Sentry panel provides a Trouble indication and shuts down the pump/core temporarily in the event of an unacceptable operating condition.

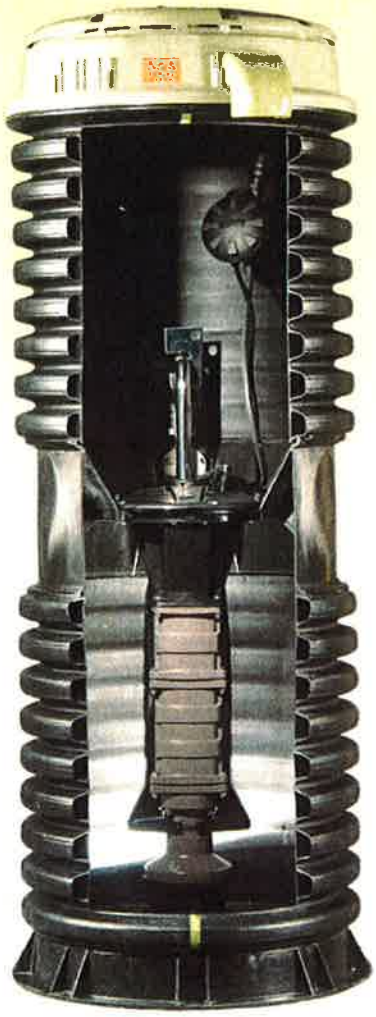

The pump/core will automatically return to Normal operation when the condition is resolved. The Protect feature provides monitoring of:

- Brownout conditions with the electrical power supply
- System over-pressure condition such as with a closed valve
- Run-dry operation of the pump/core

E/ONE SENTRY PROTECT PLUS

Taking it to the next level, the E/One Sentry Protect Plus includes the benefits of the Protect option as well as a diagnostics package that provides advance warning of pending service needs by monitoring major operating conditions and providing a Trouble indication when these conditions fall outside of normal ranges. Depending upon the severity of the abnormal condition, the grinder pump station may continue to operate. The Protect Plus feature provides monitoring of:

- AC input voltage – if input voltage falls below 88% or above 112% of normal line voltage a Trouble indication is provided
- Amperage – if amperage exceeds preset limits a Trouble indication is provided
- Pump run-time – if the pump operates for extended periods (adjustable) a Trouble indication is provided

Sentry Maximizes
Reliability and Convenience

The following features are included or available with the E/One Sentry Protect Plus to maximize reliability and convenience:

1. Visual Alarm Indicator
2. Audible Alarm
3. Alarm Silence Switch
4. GFCI Receptacle
   (2) 120-volt, 15 Amp GFCI receptacles
   (available option)
5. Main Service Disconnect Breaker
   (available option)
6. Easy-Access Terminal Strips Interface
7. Display Panel Operating Indicators
   - Ready (AC Power) Indicator
   - Pump Running Indicator
   - Trouble Indicator
   - High Level Alarm Indicator
8. LCD Display
   - Manual Run Switch/ Enter Switch
   - Scroll Switch
   - Trouble indications include:
     - Brown-out Condition
     - Run-dry Condition
     - System Over-pressure Condition
     - Voltage Problem
     - Amperage Problem
     - Run-time Limit Exceeded
9. Diagnostic Mode Switch
   (For system setup/service)
   - Diagnostic Mode Indicators
   - Pump Performance provides access to performance statistics including:
     - Real-time Voltage
     - Real-time Amperage
     - Real-time Wattage
     - Minimum Voltage
     - Maximum Voltage
     - Minimum Amperage
     - Maximum Amperage
     - Minimum Run-time
     - Maximum Run-time
     - Average Run-time
     - Last Run-time
     - Event Counter
     - Hour Meter
   - Initialize System
   - Run Limit
   - Alarm Delay
   - Power Delay
10. Generator Receptacle
    (available option)
11. Auto Transfer Switch
    (AC Mains to Portable Generator)
    (available option)

e one
SEWER SYSTEMS

Environment One Corporation
2773 Balltown Road
Niskayuna, NY USA 12309-1090
Voice (01) 518.346.6161
Fax 518.346.6188
www.eone.com

A Precision Castparts Company
LM000323 Rev. B

E/ONE EXTREME SERIES

E/One Sentry™

Alarm Panel — Basic Package

Description

The E/One Sentry panels are custom designed for use with Environment One grinder pump stations. They can be configured to meet the needs of your application, from basic alarm indication to advanced warning of pending service requirements.

E/One Sentry panels are supplied with audible and visual high level alarms. They are easily installed in accordance with relevant national and local codes. Standard panels are approved by UL, CSA, CE and NSF to ensure high quality and safety.

The panel features a corrosion-proof, NEMA 4X-rated, thermoplastic enclosure. A padlock is provided to prevent unauthorized entry (safety front).

Features

Circuit breakers, 240 or 120 VAC service

Terminal blocks and ground lugs

Audible alarm with manual silence

Manual run feature and run indicator

Redundant "Start" function with high level alarm

Safety front — authorized personnel only when locked

Conformal-coated alarm board (both sides)

Alarm board overload protection

Please consult factory for special applications.

PERFORMANCE PIPE
A DIVISION OF CHEVRON PHILLIPS CHEMICAL COMPANY LP

www.performancepipe.com

Performance Pipe Molded Fittings Submittal

This submittal outlines the standards and cell classification for Molded fittings produced by Performance Pipe.

Performance Pipe Molded Fittings are produced in six different Series for application in various industries.

The DriscoPlex 8100 series fitting (IPS or CTS) is an all purpose fitting that meets several application standards. It is produced out of High Performance High Density PE4710. This material code designation meets and exceeds PE3408, PE3608, PE4710 and PE100 submittal requests.

The Driscoplex 6500 series fittings are produced of High Performance Medium Density resin. It meets or exceeds PE2406 and 2708 submittal requests.

The Factory Mutual Approved (FMA) Driscoplex 1500 and 1600 series fittings are manufactured with High Performance High Density PE4710 resin.

The Driscoplex 4000 Series Ductile Iron Pipe Size (DIPS) fittings are produced to several manufacturing standards. The fittings are manufactured of High Performance High Density PE4710 resin.

The Driscoplex 5300 series fittings are made for the Geothermal Industry. The fittings are manufactured from High Performance High Density resins that meet or exceed PE3408 and 3608 submittal requests.

Table 1

Series	Application	Manufacturing Standard	ASTM Material Designation Code	Cell Classification	Sizes of Manufacture
8100	**Mun., Ind. & Energy Gas, Water, Sewer, Oil field, Landfill Various**	ASTM D-2513 AWWA C906 ASTM D-3261	**PE 4710**	**445574C**	½" – 1 ¼" CTS ½" – 8" IPS
6500	**Gas Distribution**	ASTM D-2513 ASTM D-3261 ASTM D-2683 CAN/CSA-B137.4	**PE 2708**	**234373E**	½" – 1 ¼" CTS ½" – 8" IPS
4000 (DIPS)	**Mun. & Ind. Potable Water, Various**	AWWA C906 ASTM F-714 ASTM D-3035	**PE 4710**	**445574C**	3" – 8" DIPS
1500 (IPS) 1600 (DIPS)	**Factory Mutual Fire Main(FMA)**	FM 1610 ASTM F-714 AWWA 901 & C906	**PE 4710**	**445574C**	2"- 8" IPS
5300	**Geothermal**	ASTM D3035 ASTM F714	**PE3608**	**445574C**	2"- 8" IPS

August 2007 Supersedes all previous publications
© 2007 Chevron Phillips Chemical Company LP

Performance Pipe Mechanical Joint Adapters are manufactured through 12" (IPS & DIPS) sizes.

Performance Pipe Flange Adapters 20", 22" and 24" and transition fittings are manufactured of PE3608 resin.
All other High Density fittings are manufactured of PE4710 High Performance High Density resins.

The applications listed in Table 1 are limited by the table space requirements. Please see the Performance Pipe Municipal, Industrial & Energy Submittal Sheet (PP515) for applications and Industries.

Performance Pipe PE4710 fittings meet and exceed PE3408, PE3608, PE4710, and PE100 submittal requirements.

TABLE 2

Standard	Application
AWWA C-906 AWWA C-901	Covers manufacturing of pressure pipe and fittings primarily intended for use in the transportation of water and other liquids.
ASTM D-2513	Covers manufacturing requirements and test methods for fittings intended for use in fuel gas mains and services.
ASTM F-714	Covers polyethylene pipe made in dimensions based on outside diameters 3" and larger.
ASTM D-3035	Covers polyethylene pipe made in dimensions based on outside diameters less than 3".
ASTM D-3261	This Specification covers molded and machined fittings for use with polyethylene pipe for various applications.
ASTM D-2683	Covers socket-type fittings for outside diameter controlled polyethylene fittings.
CAN/CSA-B137.4	Covers Canadian Standards Association standards for outside diameter controlled gas pipe & fittings.
NSF-61	Performance Pipe PE3608 and PE4710 high density fittings are produced from NSF 61 listed resin compounds.

Performance pipe's fittings are connected using butt fusion, sidewall fusion, socket fusion, and other mechanical methods, such as flanges, mechanical joint adapters and compression couplings.

August 2007 Supersedes all previous publications
© 2007 Chevron Phillips Chemical Company LP

TLC THE LATERAL CONNECTION CORP.

"Tap Into The Source"

Home
Products
Applications
Specifications
Company
Contact

PVC Swing Checks

PVC Swing Check Features

- Available in PVC
- Sizes 1¼" x 1¼" rated at 200 PSI @ 73° F
- Sizes 1¼" x 1½" to 2" x 2" rated at 160 PSI @ 73° F
- Compression (IPS, CTS) & Socket (PVC) end connectors available
- Fully serviceable
- EPDM O-Rings
- 100% hydro tested prior to leaving the factory

End Connections Availability Table

	Compression		Compression x Socket
Size	IPS	CTS	IPS x PVC

Regular Pattern Ball Valves - 300 PSIG Water

SIZES AVAILABLE

Size	INLET	BALL	OUTLET	6103T* FLATHEAD	6103Q*◆ FLATHEAD	6103-3Q* FLATHEAD	6103-22* FLATHEAD / 6103W-22* LOCKWING	
				T CTS Comp x FLARE	Q CTS Comp x FLARE	3Q PEP Comp x FLARE	22 CTS Comp x FLARE	
				FLATHEAD	FLATHEAD	FLATHEAD	FLATHEAD	LOCKWING
3/4"	3/4"	3/4"	3/4"	●	●	●	●	
1" x 3/4" x 3/4"	1"	3/4"	3/4"	●			●	
1"	1"	1"	1"	●			●	●

SIZES AVAILABLE

Size	INLET	BALL	OUTLET	6101 FLATHEAD / 6101W LOCKWING		6101WW DOUBLE LOCKWING	6101FH INTEGRAL HANDLE FLATHEAD
				FNPT x FNPT		FNPT X FNPT	FNPT X FNPT
				FLATHEAD	LOCKWING	DOUBLE LOCKWING	FLATHEAD/INTEGRAL HANDLE
1/2" x 5/8" x 1/2"	1/2"	5/8"	1/2"	●	●		
3/4" x 5/8" x 3/4"	3/4"	5/8"	3/4"	●	●	●	●
3/4"	3/4"	3/4"	3/4"	●	●	●	●
1" x 3/4" x 3/4"	1"	3/4"	3/4"	●	●		
1" x 3/4" x 1"	1"	3/4"	1"	●	●		
1"	1"	1"	1"	●	●	●	●
1¼" x 1" x 1"	1¼"	1"	1"	●	●		
1¼" x 1" x 1¼"	1¼"	1"	1¼"	●	●		
1¼" x 1½" x 1¼"	1¼"	1½"	1¼"	●			●
1½"	1½"	1½"	1½"	●	●		●
2"	2"	2"	2"	●	●		●
2½" x 2" x 2½"	2½"	2"	2½"	●	●		

Ball Valves with Dielectric Connections - 300 PSIG Water

SIZES AVAILABLE

Size	INLET	BALL	OUTLET	6100DBQ* FLATHEAD	6100DB-22* FLATHEAD
				Q CTS Comp x Q CTS Comp	22 CTS Comp x 22 CTS Comp
3/4"	3/4"	3/4"	3/4"		●
1"	1"	1"	1"	●	●
1½"	1½"	1½"	1½"		●
2"	2"	2"	2"		●

•Contact factory for other variations.

5 1/4" Shaft 2-Piece Valve Boxes

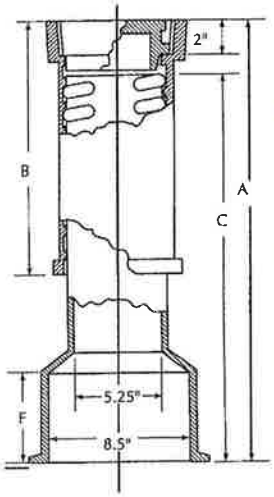

Fig. No. 4905

Fig. No. 4905

2-Piece Screw Type Adjustable Valve Box

- Designed to cover the Stuffing box only on Valves up to 10" in size.
- Square Screw Type Top available 15" and 26 1/2" length.
- Locking Covers available. (Gas, Sewer, Water)

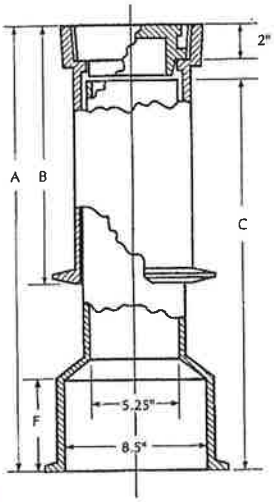

Fig. No. 4908

Fig. No. 4908

2-Piece Sliding Type Adjustable Valve Box

- This Box is the same as the one at left, except it is Sliding Type.
- Some feel the Sliding feature helps prevent impact to valve from Surface.
- Flange at bottom of Top Section can be any distance from top or omitted.
- Locking Covers available. (Gas, Sewer, Water)
- Non-tip Covers with longer skirt available.

See Table on page 10 for proper length for various valves.

Cover marked GAS or WATER or Special Lettering at Extra Cost. Cover weight - 13 lbs.

Size No.	Extension Range - A	Top Section & Cover No.	Top Section & Cover Dim. B	Top Section & Cover Wt.	Bottom Section No.	Bottom Section Dim. C	Bottom Section Wt.	Height Bell-F	Wt.
18	18-24	54	10.5	35.0	61	14.5	23.0	6.5	58.0
20	27-36	55	15.0	42.0	62	24.0	31.5	6.5	73.5
21	39-48	55	15.0	42.0	64	36.0	46.0	8.5	88.0
22	39-60	56	26.0	58.0	64	36.0	46.0	8.5	104.0
23	48-72	Longer Boxes made by adding Extensions to No. 22.							
24	48-84								
25	48-96								

Size No.	Extension Range - A	Top Section & Cover No.	Top Section & Cover Dim. B	Top Section & Cover Wt.	Bottom Section No.	Bottom Section Dim. C	Bottom Section Wt.	Height Bell-F	Wt.
5461-S	18-24	54-S	10.5	35.0	61-S	15.0	24.0	6.5	59.0
5561-S	23-29	55-S	15.5	42.0	61-S	15.0	24.0	6.5	65.1
5562-S	27-36	55-S	15.5	42.0	62-S	24.5	33.0	6.5	75.0
5564-S	39-48	55-S	15.5	42.0	64-S	36.0	46.0	8.5	88.0
5662-S	38-48	56-S	26.5	57.0	62-S	24.5	33.0	6.5	90.0
5664-S	39-60	56-S	26.5	57.0	64-S	36.0	46.0	8.5	103.0
5468-S	63-68	Longer Boxes made by adding Extensions to No. 5664-S							
5568-S	63-73								
5668-S	63-84								

Extensions

Fig. No. 4905-X

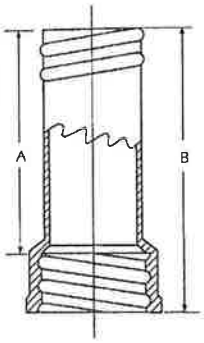

Fig. No. 4905-X

Screw Extension

Size No.	Increases Length A	Overall Length B	Wt.
57	9.0	13.0	20.0
58	14.0	18.0	23.0
59	20.0	24.0	31.5
60	24.0	30.0	36.5
61	30.0	36.0	46.0

Fig. No. 4906-X

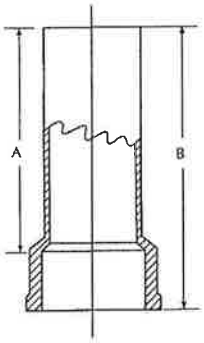

Fig. No. 4906-X

Sliding Extension

Size No.	Increases Length A	Overall Length B	Wt.
63-E	9.0	13.0	20.0
64-E	14.0	18.0	23.0
65-E	20.0	24.0	31.5
66-E	24.0	30.0	36.5
67-E	30.0	36.0	46.0

Accessories

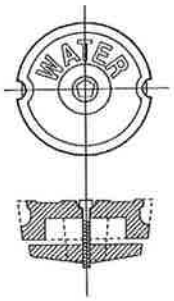

Fig. No. 4904-L

Locking Cover

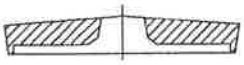

Fig. No. 5060

Rock Catcher

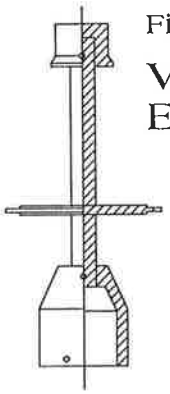

Fig. No. 5051

Valve Stem Extension Kit

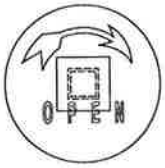

Fig. No. 5050

Valve Operating Key

NPP PVC Sewer

PVC GRAVITY SEWER PIPE
ASTM D-3034 PSM
Gasketed Pipe Product Data

Northern Pipe Products PVC Gasketed Sewer Pipe conforms to ASTM D-3034 in sizes 4 through 15 inch and conforms to ASTM F-679 in sizes 18 through 24 inch. 4-inch through 15-inch SDR-35 and 18-inch PS-46 are available with the CSA (Canadian Standards Association) mark of acceptance. All Gasketed Sewer Pipe is manufactured to laying lengths.

ASTM D-3034

Nominal Pipe Size Inches	Pipe O.D. Inches	SDR-35			SDR-26			SDR-23.5		
		Min. Wall Inches	Weight Lbs./Ft.		Min. Wall Inches	Weight Lbs./Ft.		Min. Wall Inches	Weight Lbs./Ft.	
			14' Length	20' Length		14' Length	20' Length		14' Length	20' Length
4	4.215	.120	1.04	1.03	.162	1.38	1.36	.178	1.51	1.50
6	6.275	.180	2.32	2.30	.241	3.08	3.06	.265	3.36	3.34

Note: 4" and 6" diameter SDR 28 with the Canadian Standards Association mark of acceptance is available on special order.

ASTM D-3034

Nominal Pipe Size Inches	Pipe O.D. Inches	SDR-41			SDR-35			SDR-26		
		Min. Wall Inches	Weight Lbs./Ft.		Min. Wall Inches	Weight Lbs./Ft.		Min. Wall Inches	Weight Lbs./Ft.	
			14' Length	20' Length		14' Length	20' Length		14' Length	20' Length
8	8.400	.205	3.59	3.54	.240	4.18	4.13	.323	5.57	5.50
10	10.500	.256	5.61	5.54	.300	6.55	6.46	.404	8.74	8.64
12	12.500	.305	7.96	7.85	.360	9.36	9.22	.481	12.41	12.28
15	15.300	.375	12.03	11.85	.437	13.97	13.75	.588	18.65	18.40

ASTM F-679

Nominal Pipe Size Inches	Pipe O.D. Inches	SDR-35			SDR-26		
		Min. Wall Inches	Weight Lbs./Ft.		Min. Wall Inches	Weight Lbs./Ft.	
			14' Length	20' Length		14' Length	20' Length
18	18.701	.536	21.03	20.70	.720	27.90	27.51
21	22.047	.632	28.50	28.10	.791	38.10	37.40
24	24.803	.711	36.30	35.70	.889	48.40	47.50

Northern Pipe Products PVC Gasketed Sewer Pipe is made with integral bell gasketed joints conforming to ASTM D-3212 (Standard Specification for Joints for Drain and Sewer Plastic Pipes Using Flexible Elastomeric Seals). All gaskets conform to ASTM F-477 (Standard Specification for Elastomeric Seals for Joining Plastic Pipe). Spigot ends are beveled and insertion depths are marked for correct

installation. Northern Pipe Products employs the Rieber Gasket System. The Rieber joining system is a factory made "locked-in" flexible elastomeric seal. The gasket is installed in the bell race during manufacture of the joint. It should not be removed for any reason; destruction of the joint occurs.

PVC GRAVITY SEWER PIPE
ASTM D-3034
Belled End Pipe Product Data

Northern Pipe Products PVC Belled Sewer Pipe is made from compounds conforming to cell class 12454B as defubed in ASTM D-1784 and meets all dimensional and physical specifications of ASTM D-3034. 4-inch through 6-inch is manufactured in 10-foot overall lengths, while 8-inch through 15-inch is 14-foot laying length.

Size	SDR	O.D.	Wall	Wt./Ft.	Length	Ft./Pallet	Ft./T.L.
4"	35	4.215	.120	1.01	10'	630'	20,160'
4"	35	4.215	.120	1.01	20'	1260'	20,160'
4"	26	4.215	.162	1.35	10'	630'	20,160'
6"	35	6.275	.180	2.26	10'	330'	7,920'
6"	35	6.275	.180	2.33	14'	462'	8,316'
6"	26	6.275	.241	3.00	10'	330'	7,920'
8"	35	8.400	.240	4.17	14'	336'	6,048'
10"	35	10.500	.300	6.55	14'	168'/210'	3,402'
12"	35	12.500	.360	9.41	14'	112'	2,688'
15"	35	15.300	.437	14.16	14'	84'	1,512'

PVC DRAINAGE PIPE
ASTM D-2729 PSM
Belled End Pipe Product Data

Size	O.D.	Wall	Wt./Ft.	Length	Ft./Pallet	Ft./T.L.
4"	4.215	.075	.64	10'	630'	20,160'
6"	6.275	.100	1.27	10'	330'	7,920'

PVC PIPE PERFORATION SPECIFICATIONS

PVC DRAINAGE PIPE
ASTM D-2729

Size	O.D.	Wall	Length	Rows of Perforations	Hole Size	Hole Spacing Per Row Inches	Feet Per Pallet
4	4.215	.075	10'	2	5/8	5	630'
6	6.275	.100	10'	2	5/8	5	330'

PVC HIGHWAY UNDERDRAIN
ASTM F-758

Size	O.D.	Wall	Length	Rows of Perforations	Hole Size	Hole Spacing Per Row Inches	Feet Per Pallet
4	4.215	.120	10'	4	1/4	3	630'
6	6.275	.180	10'	4	1/4	3	330'

PVC SDR 35 SEWER PIPE
ASTM D-3034

Size	O.D.	Wall	Length	Rows of Perforations	Hole Size	Hole Spacing Per Row Inches	Feet Per Pallet
4	4.215	.120	10'	2	5/8	5	630'
6	6.275	.180	10'	2	5/8	5	330'

Typical 2-Row Pattern
Conforms to ASTM D-2729

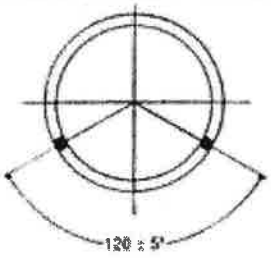

Typical 4-Row Pattern
Conforms to ASTM F-758

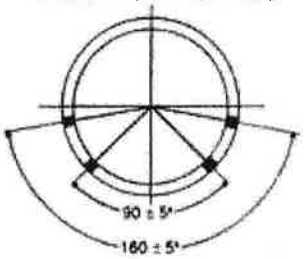

NPP Home Page | Company | Contacts | SiteMap

Please contact our Webmaster with questions or comments.

© Copyright 2007 Northern Pipe. All rights reserved.