CITY OF LEE'S SUMMIT
DESIGN AND CONSTRUCTION MANUAL
SECTION 1000 - GENERAL PROVISIONS

1001 PURPOSE

The purpose of the City of Lee's Summit Design and Construction Manual ("Manual") is to provide minimum design and construction standards to safeguard life, limb, health, property and public welfare by regulating and controlling the design, construction, quality of materials, and location of public and private infrastructure within the City of Lee's Summit.

1002 SCOPE

The Manual is composed of four parts: General Provisions, Design Criteria, Standard Specifications, and Standard Drawings. The provisions of the Manual shall apply to the design and construction of infrastructure including, but not limited to, streets; sidewalks; pavements; water lines; sanitary sewers; storm sewers; and stormwater detention.

Where, in any specific case, different sections of the Manual specify different requirements, the most restrictive shall govern. Where there is a conflict between a general requirement and a specific requirement, the specific requirement shall be applicable.

The regulations are not intended to interfere with, abrogate, or annul any other ordinance, rule or regulation, statute, or other provision of law. Where any provision of these regulations imposes restriction different from any provision of these regulations or any other ordinance, rule, or regulation or other provision of law, whichever provisions are more restrictive or impose higher standards shall control.

A. Modifications: Wherever there are practical difficulties involved in carrying out the provisions of this Manual, the City Engineer shall have the authority to grant modifications for individual cases, upon application in writing by the property owner or owner's representative, provided the City Engineer shall first find that special individual reasons exist that make the strict letter of this Manual impractical and the modification is in compliance with the intent and purpose of this Manual and that such modification does not lessen health, accessibility, life and safety, or functional requirements. The details of action granting modifications shall be copied to the project file.

B. Alternative Materials, Design and Methods of Construction and Equipment: The provisions of this Manual are not intended to prevent the installation of any material or to prohibit any design or method of construction not specifically prescribed by this Manual, provided that any such alternative has been approved. Requests for use of alternative materials shall be submitted in writing to the City. An alternative material, design or method of construction shall be approved where the City Engineer finds that the proposed design is satisfactory and complies with the intent of the provisions of the Manual, and that the material, method or work offered is, for the purpose intended, at least the equivalent of that prescribed in this manual in quality, strength, effectiveness, durability, and safety.

C. Tests: Whenever there is insufficient evidence of compliance with the provisions of this Manual, or evidence that a material or method does not conform to the requirements of this Manual, or in order to substantiate claims for alternative materials or methods, the City

Engineer shall have the authority to require tests as evidence of compliance to be made at no expense to the City. Test methods shall be as specified in this Manual or by other recognized test standards. In the absence of recognized and accepted test methods, the City Engineer shall be authorized to approve the testing procedures. Tests shall be performed by an independent, accredited testing lab meeting A2LA, AMRL, AASHTO, AWWA, CCRL, or meeting other governing accreditation agencies recognized by the MoDOT, MDNR, or USACE. Reports of such test shall be retained by the City Engineer for the period required for retention of public records.

D. Appeals: Appeals of orders, decisions or determinations made by the City Engineer relative to the application and interpretation of this Manual shall be made to the Board of Appeals as established by Sec. 7-173 of the City of Lee's Summit Code of Ordinances. The City Engineer's decision shall be final when mailed by U.S. mail postage prepaid to the owner or the owner's representative and may be appealed within ten (10) days from the date of such mailing. The appeal, if any, shall be pursuant to the contested case procedures of Chapter 536, RSMo.

1003 DEFINITIONS

Whenever the following words, phrases or abbreviations appear in this ordinance, they shall have the following meanings:

Bond shall mean performance, payment and/or maintenance bonds and other instruments of security furnished by the Contractor/Developer and his surety in accordance with these specifications.

City shall mean the City of Lee's Summit, a municipal Corporation, acting by and through its duly elected governing body and its duly appointed officials.

City Engineer shall mean the Engineer of the City of Lee's Summit or his/her authorized representative acting on behalf of the City.

Contractor shall mean a person, partnership, or corporation duly licensed to perform construction operations within the City of Lee's Summit.

Contractor/Developer shall mean either a Contractor or Developer who is applying for or has applied for and received approval of engineering plans for infrastructure improvements.

Day shall mean a calendar day of 24 hours measured from midnight to the next midnight unless otherwise defined by specific project contract documents.

Department shall mean the Engineering Division of the Public Works Department or the individual assigned to perform a function for the Engineering Division of the Public Works Department.

Design Engineer shall mean a registered professional engineer, licensed in the state of Missouri, under contract to the Contractor/Developer or the City of Lee's Summit for the purpose of preparing and sealing engineering studies, design drawings, specifications, etc.

Developer shall mean a person whose intent or function is to bring about any change of land use or improvement on any parcel of land within the City of Lee's Summit.

Development shall mean any change of land use or improvement on any parcel of land within the City of Lee's Summit.

Drainage Facility shall mean a manmade structure or natural watercourse for the conveyance of storm runoff. Examples are open channels, pipes, ditches, swales, catch basins, street gutters, slopes, berms, and other features affecting the flow of water.

Engineering Plans shall mean all engineering drawings including plan and profile drawings, a Master Drainage Plan, engineering details, calculations; and / or reports prepared and sealed by a registered professional engineer, and meeting City standards and good engineering practices.

EPRI Fees shall mean the fees paid to the Lee's Summit Public Works Department for Engineering Plan Review and Inspection.

Final Acceptance shall mean the time when all requirements for the required Improvements have been fully met.

Final Affidavit and Agreement shall mean lien waivers indicating all subcontractors and suppliers have been paid; affidavits certifying all contractors and subcontractors have complied with prevailing wage laws for work subject to prevailing wage; necessary bonds or other financial securities have been provided to the City as required by this Manual

Improvements shall mean the entire construction required to be provided in accordance with the approved Engineering Plans. Improvements include and are the result of performing or providing all labor, services, and documentation necessary to produce such construction, and furnishing, installing, and incorporating all materials and equipment into such construction, all as required by the approved Engineering Plans.

Inspector shall mean an authorized representative of the City of Lee's Summit Public Works Department who has been assigned to monitor conformance to the requirements of this Manual by the Contractor/Developer.

Land Disturbance shall mean an activity including, but not limited to, mechanized clearing, grading, etc., which removes the vegetative ground cover.

Owner shall mean any person having legal title to, or a proprietary interest in real property. Proprietary interest shall include, but not be limited to, estate administration, trusteeship, guardianship, and actions under a valid power of attorney.

Site shall mean the total area of the parcel, tract, lot or ownership of land upon which development or land disturbance is proposed irrespective of the actual limits or size of the proposed development or land disturbance activity.

Substantial Completion shall mean the time at which the Improvements have progressed to the point where, in the opinion of the City Engineer, the Improvements are sufficiently complete, in accordance with the requirements of this Manual, so that the Improvements can be utilized for the purposes for which they are intended.

Abbreviations used throughout the Design Criteria and the Standard Specifications are listed in Appendix A to this Section.

1004 REFERENCED STANDARDS

Whenever references are made to national or industry standards and specifications, methods of testing, materials codes, practices, and requirements, it shall be understood that the latest revision of said references shall govern unless a specific revision is stated. Whenever a reference, standard, or specification is not explicit or not specifically covered by this manual for any engineering and/or

construction application, it shall be understood that generally accepted practices, references, standards, and specifications shall govern and shall be approved by the City Engineer.

1005 ENGINEERING SUBMITTALS

A. Engineering plans for any proposed development (residential, commercial and/or industrial) for improvements that involve the construction of sanitary sewer, storm sewer/detention, waterlines, streets, sidewalks and pavements shall be submitted to the City Engineer to determine if the infrastructure in the proposed development complies with the design criteria in this Manual.

B. Plan Requirements: Specific plan requirements are contained in the sections of the Design Criteria for various types of infrastructure. Minimum general requirements include the following:

1. Cover sheet shall include the following minimum information:
   a. Project title
   b. Vicinity map
   c. Developer's name, address, phone and fax number, and email address
   d. Design Engineer's name, address, phone and fax number, and e-mail address
   e. List of drawings (including revision dates)
   f. Utility contact information.
2. Plan set shall include:
   a. Title Sheet
   b. General Notes
   c. Survey Control Data
   d. Summary of bid quantities
   e. Existing utilities, easements, and right-of-way
   f. Utility relocations (as required)
   g. Typical Sections for streets, rights of way, sidewalks, driveways, pavements, slopes, and other features as required.
   h. Plan views, profiles and details
      i. street, curb, gutter, sidewalks and pavements
      ii. traffic signals and pavement markings
      iii. sidewalks and associated ADA ramp details
      iv. storm sewers (including detention / retention facilities)
      v. sanitary sewers
      vi. water lines
   c. Temporary traffic control plan (as required)
   d. Permanent signing and marking plan (as required)
   e. Drainage area map, mass grading plan, and a Master Drainage Plan (as required) for the entire development in accordance with the requirements in Section 5600.
   f. Erosion and Sediment Control Plan for the entire development in accordance with the requirements in Sections 5100 and 2100.
3. All infrastructure shall have its own stationing and/or coordinates (i.e. pipelines shall not have road stationing).

4. All drawings, except detail sheets, shall be drawn to an acceptable standard engineering scale and shall include a bar scale.
5. The City's Standard Drawings, necessary to complete the Improvements, shall be incorporated into the plans.
6. Plans shall include at least two written benchmark descriptions and elevations, based on USGS (NAD83) or the City's datum.
7. Minimum font size on all plans shall be 0.125 inch on full size plans.
8. All plans should be oriented so that north is to the top (up) or to the left of the sheet and shall include a north arrow.
9. Legend shall be included showing line weights, symbols, abbreviations, etc.
10. Aerial backgrounds and imagery shall not be allowed.

C. Submittals

1. Two sets of sealed engineering drawings on 22" x 34" paper for the initial submittal. One full-size and two half-size (11" x 17") sets for final distribution of the approved plans, and at least one additional set to be stamped and returned to the Contractor upon approval and payment of fees.
2. One copy of each of the following as applicable:
   a. All storm water calculations, including detention and/or retention system design.
   b. All sanitary sewer system calculations for a 50-year rainfall event including hydraulic grade line.
   c. Water system analysis.
   d. Traffic impact studies.
   e. Soil or geotechnical reports.
   f. Pavement designs.
   g. Summary of bid quantities. This may be submitted as a separate document accompanying the engineering plans.
   h. Engineer's Opinion of Probable Construction Costs. This shall be an itemized list by quantity to include all materials, labor, and equipment necessary to complete the entire project and shall be submitted as a separate document. Reference Paragraph 1010, Permits.
   i. All applicable local, state, federal and private agency permits.
   j. Stormwater Pollution Prevention Plan (SWPPP).
3. Separate (proposed) off-site easement documents as required for easements not dedicated on a plat.
4. Engineering Plan submittals that are inactive may be required to be resubmitted at the discretion of the City Engineer.

1006 OIL AND GAS WELLS AND UNDERMINED AREAS

A. Engineering drawings for any proposed development shall show the surveyed location of any oil or gas well or undermined area within the development.

B. Documentation of compliance with the Revised Statutes of Missouri, and the Code of State Regulations shall be provided with the engineering submittal for any oil or gas wells that are plugged and abandoned within the development.

C. Monumentation of Plugged and Abandoned Oil and Gas Wells

1. The permanent markers shall be placed at all plugged and abandoned oil and gas wells located under pavement in compliance with this section and the Unified Development Ordinance.
2. The permanent marker shall be a "Mark-it" concrete/bench marker Model C/M-SS-3 1/4 B (3 1/4 inch flat/dome top by 3 inch split stem brass marker), with magnet, or an approved equal approved by the Public Works Department.
3. The permanent marker shall be stamped with the identifying number for the well, as issued by the Missouri Department of Natural Resources.

1007 PLAN APPROVAL

Engineering Plan approval can be granted upon review and acceptance by the City Engineer and payment of the EPRI fees. All required submittals must be received in the required number of copies and format in order for approval of Engineering Plans to be granted. Partial approval of Engineering Plans may be granted at the sole discretion of the City Engineer.

Approval of plans does not relieve the Contractor/Developer from complying with the provisions set forth in this Manual. The Design Engineer whose seal appears on the Engineering Plans shall have the ultimate responsibility of ensuring that the engineering complies with the Design Criteria. Resubmission of Engineering Plans will be required for re-review and re-approval if construction has not commenced within one year from the date of plan approval.

1008 POSTING OF SECURITY FOR SUBDIVISION RELATED PUBLIC IMPROVEMENTS

All required subdivision-related public improvements must be completed as a condition precedent to the approval of the final plat, unless security is provided according to Article 16, Division IV – Minimum Public Improvements, Sections 16.330 and 16.340 of the Unified Development Ordinance (UDO). The public improvements covered by the UDO and this Manual include, without limitation, streets, curb and gutter, sidewalks, traffic signals, sanitary sewers, storm drainage facilities, and waterlines.

Whenever security is posted in the manner provided for under the UDO, the Contractor/Developer shall enter into a deposit agreement with the City in a form approved by the City Attorney. The City shall maintain any escrow funds deposited by a Contractor/Developer for the purpose of constructing public improvements in a separate account established for the public improvements. Said account shall earn interest at the rate earned on the City's pooled cash in accordance with the City's investment policy and such interest will be paid to the City to cover administrative and other costs associated with maintaining the cash deposit.

The dollar value of the security shall be based on an estimate of the cost to complete the construction and install the improvements and shall be determined the Design Engineer.

1009 INFRASTRUCTURE UPSIZING

City financial assistance may be made available for upsizing of water lines, sanitary sewers, and/or streets to serve private development. The amount of upsizing assistance shall be based upon City infrastructure planning requirements versus the minimum infrastructure requirements to serve the development. General terms for upsizing of water and sewer projects are covered in Sections 32.5 and 32-8 of the Lee's Summit Code of Ordinances.

A. During the planning and/or design of a development project, areas of possible upsizing may either be identified by the City Engineer or be proposed by the Contractor/Developer. The Contractor/Developer shall provide the following information to the City Engineer:

   1. A cover letter stating the specifics of the upsizing proposal.

   2. An Engineer's Opinion of Probable Construction Costs that illustrates the cost of the proposed minimum improvements required to serve the development versus the cost of the proposed improvements generated through the City's CIP construction bids or accepted construction means.

B. Following the City Engineer's evaluation of the proposal, an upsizing agreement will be drafted by the City Attorney for execution by the City and Contractor/Developer.

C. After the Contractor/Developer has executed the agreement and returned the originals to the City, the proposal will be presented to the Public Works Committee and City Council for approval of the City's estimated cost share of the project and for approval of the agreement.

D. Following the City Council action:

   1. Engineering Plan approval will be given in accordance with the procedures outlined in the Design and Construction Manual.

   2. The required improvements of the project shall be constructed by the Contractor/Developer.

E. Reimbursement will be issued following final acceptance of the entire project. Following the acceptance of the improvements of the entire project by the City Engineer, the Contractor/Developer shall submit a written request for reimbursement in the final dollar amount for the City's cost share.

F. Reimbursement will be made to the Contractor/Developer in the form of a check, provided the request does not exceed the amount included in the upsizing agreement.

G. In the event the request does exceed the previously approved amount, the request will be reviewed by the City Engineer and will be presented to the Public Works Committee and City Council for final approval prior to payment.

1010 PERMITS

A. The Contractor/Developer or Owner is responsible for obtaining all applicable local, state, federal and/or private agency permits.

B. Nothing in this Section shall be deemed to supersede permitting requirements imposed by any law, rule or regulation of other Federal, State or local agencies, or of the City. In the event of conflict between these requirements and any other such law, rule or regulation, the more restrictive laws, rules or regulations shall apply.

C. Land Disturbance Permit

All land disturbances, including residential and commercial development projects, shall provide adequate erosion control to protect public streets, public storm sewer systems, adjacent property, streams and surface waters from being polluted with sediment and silt.

1. A Land Disturbance Permit is required for any public or private entity that intends to cause or causes a condition that allows for erosion, including but not limited to stripping vegetation, clearing and grubbing land, or creating any type of land disturbance. The Contractor/Developer or Owner that intends to cause or causes a condition that allows for erosion shall apply for a Land Disturbance Permit.

2. Applications for a Land Disturbance Permit shall be submitted to the City. Applications shall be accompanied by

   a. An erosion and sediment control plan
   b. SWPPP
   c. An application fee
   d. Other submittals which are listed on the Land Disturbance Permit Application

Where practical, drawings may be combined to contain all of the required plans.

3. The following activities are exceptions and do not require a Land Disturbance Permit:

   a. Any grading or excavation for a basement, footing, retaining wall, or other structure on a single lot authorized by a valid full building permit.
   b. Any land disturbance activity of 2000 square feet or less.
   c. Public landfills.
   d. Agricultural activities in connection with the production, harvesting, storage, drying, or raising of agricultural products and livestock.
   e. Mining, quarrying, excavating, processing, and/or stockpiling of rock, sand, aggregate or clay where established and provided for by law.

D. Infrastructure Permits: An infrastructure permit is required prior to the start of construction.

1. Public Works Inspections will issue the infrastructure permit within 48 hours once the construction drawings have been approved by the City Engineer or their designee and the EPRI fee has been paid.

2. The EPRI Fees will be calculated using the Engineer's Opinion of Probable Construction Costs or the contract amount from the project contract documents. This must be an itemized list of unit prices and quantities that includes all materials, labor, equipment and incidental work necessary to complete the entire project.

3. The fee can be found in the City of Lee's Summit, Schedule of Fees.

4. The Engineer's Opinion of Probable Construction Costs shall include, but not be limited to, the following items:

   a. Public Infrastructure:

      i. All public infrastructure (sidewalks, streets, pavements, sanitary system, storm water system, and water system).
      ii. All grading work

iii. All offsite public improvements
iv. All erosion and sediment control devices, BMPs, and activities
v. All detention/retention facilities
vi. All public street signage and lighting
vii. All traffic signals
viii. Traffic Control
ix. Other work required to complete the project

b. Private Infrastructure:

i. Any water service line larger than 2" in diameter, valves, hydrants, and backflow preventer with vault, if outside the building.
ii. All storm water piping 6" and larger, structures, and detention/retention facilities
iii. All grading for detention/retention ponds
iv. All erosion and sediment control devices, BMPs, and activities
v. All private street construction, including parking lots, drive approaches and sidewalks.
vi. All site grading
vii. All retaining wall structures designed to facilitate site grading
viii. All private sanitary sewer laterals, wyes, cleanouts, and connection of the building stub to the public main
ix. All traffic control devices
x.

E. Building Permit for Foundation Only: No foundation shall be constructed without first obtaining, at a minimum, a Building Permit for Foundation Only from the Codes Administration Department in accordance with the current building code. No Building Permit for Foundation Only will be issued before:

1. The following facilities, if required by approved Engineering Plans, are complete as indicated:

a. The sanitary sewer serving the development is substantially complete. Substantial completion of the sanitary sewer shall include substantial completion of any off-site or outfall sewer serving the development. Any new sewer main serving the building site must be completely connected to the existing system and must be operational.

b. A paved road is in place serving the development, unless otherwise approved by the City Engineer and the Fire Department.

c. Erosion and sediment control must be installed according to the current rules and regulations according to Sections 2150 and 5100 of the Manual.

2. Conditions of all development agreements covering the development are met, if applicable.

3. If required by Section 5600, the as-graded record drawing(s) of the development's Master Drainage Plan have been submitted to and approved by the City Engineer.

Exception: For a single commercial site (single building/single lot) a building permit will be allowed following issuance of an infrastructure permit, provided there is no impact to any other users. Substantial completion shall be issued prior to any certificate of occupancy.

No water or sanitary sewer service lines shall be permitted to connect to the public mains until the mains are substantially complete.

F. Full Building Permit: All permits for buildings or structures are issued by the Codes Administration Department in accordance with the current building code. No building permit will be issued before:

1. A Certificate of Substantial Completion for all public infrastructure has been executed.

   Exception: For a single commercial site (single building / single lot), a building permit will be allowed following issuance of an infrastructure permit, provided there is no impact to any other users.

   Substantial completion shall be issued prior to any certificate of occupancy.

2. e

3. If required by Section 5600, the as-graded, record drawing(s) of the development's Master Drainage Plan have been submitted and approved by the City Engineer.

4. Erosion and sediment control has been installed according to current regulations and Sections 2150 and 5100 of this Manual.

G. Right of Way Permit: All work within the City right-of-way shall be in accordance with the City's Right of Way Management Ordinance.

H. Temporary Traffic Control Permit: All activity within the City right-of-way that impacts the flow of vehicular or pedestrian traffic shall be in accordance with the City Right-of-Way Management Ordinance.

I. Blasting Permit: No Contractor/Developer or person using explosives will conduct blasting within the City limits, without first obtaining a permit from the Public Works Department.

1. Use of Explosives
   a. Blasting shall only be conducted between the hours of 8 a.m. and 8 p.m. Monday through Saturday.
   b. Any Contractor/Developer or person using explosives within the City limits shall notify the owner or occupant of any residence or business located within a scaled distance of fifty-five from the site of blasting prior to the start of blasting at any new location. The scaled distance shall be determined by dividing the linear distance, in feet from the blast to a specific location, by the square root of the maximum weight of explosives, in pounds, to be detonated in any eight (8) millisecond period. One notification by mail, telephone, printed notification posted prominently on the premises or the property of the owner or occupant of the residence or business, or delivered in person to any such owner or occupant.

2. Application Requirements
   a. Each blasting permit application submitted under this section shall be accompanied by a fee in the amount indicated in the Schedule of Fees.

b. The application shall be submitted no less than five (5) days prior to the first use of explosives, unless such use impacts the normal flow of traffic, in which case the application shall be submitted no less than ten (10) days prior thereof.

3. Blasting Permit Application Must Contain:
   a. The name, address and telephone number(s) of the person using explosives.
   b. The name of the individual responsible for the supervision of blasting.
   c. The date or approximate period over which blasting will be conducted.
   d. The location where blasting will take place.
   e. The nature of the project or reason for blasting.
   f. Specific information about the type of explosives to be used and their storage location at the site where used.
   g. An acceptable plan for signage or other means of informing the public of blasting in the proximity to public streets or highways. All street closures or lane reductions must be approved by Public Works Engineering and may require a separate permit.
   h. Proof that the person using explosives is registered with the division of fire safety and that blasting will be conducted by a licensed blaster.
   i. Proof of commercial general liability insurance in the amount of no less than two million dollars ($2,000,000).
   j. Documentation of at least three attempts to contact the owner of any uncontrolled structures within a scaled distance of thirty-five from the blast site in order to conduct a preblast survey of such structures. The scaled distance shall be determined by dividing the linear distance, in feet from the blast to a specific location, by the square root of the maximum weight of explosives, in pounds, to be detonated in any eight (8) millisecond period. A preblast survey is not required if the owner of any such structure does not give permission for a survey to be conducted.
4. Inspection of Blasting Operations: Any authorized representative of the City may:
   a. Require that any person using explosives to show proof that he or she is registered with the Division of Fire Safety and blasting is being conducted by an individual that is licensed under the provisions of section 319.306 RSMo.
   b. Request and be allowed access to the site of blasting by the person using explosives and shall be allowed to observe blasting from a safe location as designated by the blaster.
   c. Examine records to be maintained by sections 319.309 RSMo and 319,315 RSMo.
   d. Report suspected violations of 319.300RSMo to 319.345 RSMo to the Missouri Division of Fire Safety.
5. Suspension or Revocation of Blasting Permit: Public Works shall have the power to suspend for up to fifteen (15) days or revoke any permit issued under the terms and conditions of this article for any of the following causes.
   a. Any fraud, misrepresentation or false statement contained in the permit application.
   b. Failure to rectify any dangerous condition after being ordered to do so by any authorized representative of the City of Lee's Summit.
   c. Reported or suspected violations of city or state regulations related to blasting, storage of explosives, use or handling of explosives.

d. Upon revocation or suspension, no refund of any portion of the license fee shall be made to the permittee and permittee shall cease all blasting operations.

6. Transfer, Assignment, or Sale of Rights Granted Under Permit: No transfer, assignment, or sale of rights granted under any permit granted under the terms and condition of this article shall be made without prior approval of the City Engineer.
7. Penalty: Any person who shall violate any provision of this article shall be subject to the penalties in Section 1-13 of the Code of Ordinances.
8. Exemptions: Any blasting as stated in section 319.342.7 RSMo.
9. Storage of Explosives
    a. All storage of explosives, in excess of that amount required for one day's use (day box), requires a permit to be issued by the Fire Department. The day box storage of that amount required for one day's use as approved in the Blasting Permit application shall be in accordance with all city, state, and federal regulations. The Lee's Summit Fire Department and the City of Lee's Summit has adopted the NFPA 495, Explosive Materials Code,. 2001 Edition. This information is available upon request.
    b. A Type 3 magazine shall be a "day box" or portable structure used for the temporary storage of explosives. A type 3 magazine shall be fire resistant, theft resistant, and weather resistant.
    c. The magazine shall be equipped with one steel padlock (which shall not be protected with a steel hood) having at least five tumblers and a case-hardened steel shackle at least 9.5 mm (3/8 in.) in diameter. Doors shall overlap the sides by at least 25.4 mm (1 in.) Hinges and hasps shall be attached by welding, riveting or bolting (nuts on inside.)
    d. The magazine shall be constructed of not less than 12-gauge [2.66 mm (0.1046-in.)] steel, lined with at least 12.7-mm (1/2-in.) masonite-type hardboard.
    e. Type 3 magazines containing explosive materials shall be within line-of site vision of a blaster.
    f. Detonators shall be stored in a separate magazine for blasting supplies and shall not be stored with other explosives.

J. Floodplain Development Permit: A floodplain development permit from the City Engineer is required for all work within a regulatory floodplain. Regulatory floodplains are defined on the Flood Insurance Rate Maps (FIRM) issued by the Federal Emergency Management Agency (FEMA). Copies of maps and additional floodplain information are available through the Public Works Engineering Division.

K. The Missouri Department of Transportation (MoDOT) requires a permit for all work to be performed within state highway right-of-way. No work within the state right-of-way shall commence until a permit is obtained and a copy provided to the City. No work will be accepted by the City that has not been accepted or approved as satisfactory by MoDOT.

L. Railroad companies require permits for all work to be performed within railroad right-of-way. No work within the railroad right-of-way shall commence until a permit is obtained and a copy provided to the City. No work will be accepted by the City that has not been accepted or approved as satisfactory by the affected railroad company.

1011 FEES

EPRI and miscellaneous permit fees are established in the City's current fee schedule adopted by the City Council.

1012 INSURANCE

The Contractor/Developer shall secure and maintain, throughout the duration of the project, insurance of such types and in at least amounts as are required herein. Contractor shall provide certificate(s) of insurance confirming the required protection on forms acceptable to the City. The City shall be notified by receipt of written notice from the insurer at least 30 days prior to material modification or cancellation of any policy listed on the certificate(s).

A. Industry Rating

The City will only accept coverage from an insurance carrier who offers proof that it:

- Is licensed to do business in the State of Missouri;
- Carries a Best's policyholder rating of "A" or better;
- Carries at least a Class X financial rating.
  OR
- Is a company mutually agreed upon by the City and the Contractor/Developer.

B. Insurance Requirements

1. COMMERCIAL GENERAL LIABILITY POLICY

Limits -

Each Occurrence:	$ 2,000,000
Personal & Advertising Injury:	$ 2,000,000
Products/Completed Operations Aggregate:	$ 2,000,000
General Aggregate:	$ 2,000,000

Policy <u>SHALL</u> include the following conditions:

- Contractual Liability
- Personal & Advertising Injury
- Products/Completed Operations
  Certificate must confirm inclusion of "Blasting" coverage, if applicable
- Independent Contractors
- Broad Form Property Damage

2. AUTOMOBILE LIABILITY

Policy shall protect the Contractor/Developer against claims for bodily injury and/or property damage arising out of the ownership or use of any owned, hired and/or non-owned vehicle and must include protection for either:

a. Any Auto, OR
b. All Owned Autos; Hired Autos; and Non-Owned Autos

Limits -

Each Accident, Combined Single Limits, Bodily Injury and

Property Damage:	$ 2,000,000

3. WORKERS' COMPENSATION

This insurance shall protect the Contractor/Developer against all claims under applicable state Workers' Compensation laws. The Contractor/Developer shall also be protected against claims for injury, disease or death of employees for which, for any reason, may not fall within the provisions of a Workers' Compensation law. The policy limits shall not be less than the following:

Workers Compensation:	Statutory
Employers Liability -	
Bodily Injury by Accident:	$ 100,000 Each Accident
Bodily Injury by Disease:	$ 500,000 Policy Limit
Bodily Injury by Disease:	$ 100,000 Each Employee

4. UMBRELLA LIABILITY

An Umbrella or Excess Liability policy in the minimum amount of $1,000,000 each occurrence, $1,000,000 aggregate. The umbrella or excess policy shall be at least as broad as the underlying policies and include the following protection:

a. General Liabilitye
b. Automobile Liability
c. Employers Liability

The City of Lee's Summit shall be named as an additional insured. Umbrella, or Excess Liability requirements may be modified or waived at the City's discretion upon written application to and approved by the City's risk manager (or risk management consultant). If the requirement is modified or waived, the risk manager (or risk management consultant) shall place on file with the City their reasoning for such waiver or modification.

1013 DAMAGES

The Contractor/Developer hereby expressly binds himself or itself to indemnify and hold harmless the City and its officers and employees against all suits or actions of every kind and nature brought or which may be brought, or sustained by any person, firm, or corporation, or persons, firms or corporations, in connection with or on account of the Contractor/Developer's work or in consequence of any negligence in connection with same, or on account of any poor workmanship, or on account of any act of commission or omission of the Contractor/Developer or his, its, or their agent or employees, or for any cause arising during the course of construction.

1014 SAFETY

The Contractor/Developer is responsible for complying with all applicable OSHA requirements. The City assumes absolutely no oversight responsibility.

1015 CONSTRUCTION COMMENCEMENT

Construction shall commence only after the following requirements are fully met:

A. Approval by City Engineer of final Engineering Plans and other required submittals.

B. Deposits, if applicable, have been deposited with the City.

C. All applicable permits have been obtained.

D. Certificate of Insurance has been submitted to City.

E. Verification that a business license has been obtained from the City.

F. All executed offsite easements required for construction but not dedicated by plat have been submitted to the City.

G. EPRI fee has been paid.

H. Notification to Public Works Inspectors at least 48 hours prior to anticipated commencement of construction.

I. Contractor/Developer may be required to provide written verification from a financial institution of the ability to obtain a maintenance bond or other form of security acceptable to the City.

The general contractor and all subcontractors shall maintain a current set of City-approved, stamped construction plans on the site at all times. Public Works Inspectors may, at their discretion, issue a stop work order until approved plans are available at the site.

1016 HOURS OF WORK, WEEKEND OR HOLIDAY WORK

A. Normal working hours for the City of Lee's Summit Public Works Inspection employees are between the hours of 7:00 a.m. and 4:00 p.m., Monday through Friday. Legal holidays observed by the City of Lee's Summit are New Year's Day, Martin Luther King Day, Presidents' Day, Memorial Day, Independence Day, Labor Day, Thanksgiving Day including the following Friday, Christmas and a holiday before or after Christmas Day. The actual days off for these holidays may vary and in certain situations additional days may be a part of the amount of time granted as an official holiday by the City of Lee's Summit.

B. The City of Lee's Summit shall be compensated by the Contractor/Developer for inspection services required for work performed prior to 7:00 a.m., between 12:00 p.m. and 1:00 p.m., and after 4:00 p.m. on normal workdays; and on Saturdays, Sundays, and legal holidays. Compensation for inspection services shall be at an appropriate overtime rate , as shown on the Schedule of Fees, based upon the following time frames:

1. Normal Work Days - time actually worked, minimum one hour.
2. Saturday, Sunday, Holidays - Time actually worked (door to door), minimum four (4) hours.

C. Request to work overtime on a normal work day shall be made directly to the Public Works Inspector by 12:00 noon of that day. Request for a Public Works Inspector to work overtime on Saturdays and Sundays shall be made by 3:00 p.m. on the Thursday before. Request for a Public Works Inspector to work overtime on legal holidays shall be made five (5) working days in advance. Requests will be accommodated if possible based on availability of Public Works Inspectors.

1017 TRAFFIC CONTROL

Temporary traffic control plans shall be in accordance with Section 3000 of the Design and Construction Manual.

1018 CHANGES IN THE WORK

All proposed changes must be submitted in writing by the Design Engineer to the City Engineer. Written approval by the City Engineer shall be received by the Public Works Inspector prior to implementing the change. Any change in the work made without the consent of the City Engineer shall be subject to removal by the Contractor/Developer at no cost to the City.

1019 AUTHORITY OF CITY TO STOP WORK

All construction work may be stopped at any time by the City Engineer when, in the opinion of the City Engineer, the workmanship, materials used, or procedures of work do not meet the requirements or comply with the City codes, ordinances, specifications, and procedures for such work.

1020 WORK NOT MEETING MINIMUM SPECIFICATIONS

Any completed item of work not meeting the requirements of these specifications shall normally be removed and replaced. If the City Engineer determines it is not feasible or necessary to remove substandard items of work, then such items shall be accepted as a lesser product and the Contractor/Developer shall place an appropriate amount of funds as determined by the City Engineer, in a deposit account to compensate the City of Lee's Summit for additional maintenance that would be expected for the life of the product.

1021 PROTECTION OF EXISTING FACILITIES

All construction operations in the vicinity of existing facilities shall be performed with care to prevent damage or obstruction to these facilities. If damage or obstruction occurs, repairs or adjustments shall be made in a manner and time frame approved by the City Engineer and any damaged or obstructed facility shall be repaired with new materials and restored to its original condition, at no cost to the City.

1022 SITE CLEAN UP

The Contractor/Developer shall frequently clean up all refuse, rubbish, scrap materials, and debris created as a result of his operations, so that at all times the work site and adjacent disturbed areas shall present a neat, orderly, and workmanlike appearance in accordance with Chapter 16 of the Code of Ordinances. Upon completion of the work, the Contractor/Developer shall remove from the site and any occupied adjoining property, all plants, building, rubbish, unused materials, form lumber, and other materials belonging to him or his subcontractor. Burning of waste material is prohibited. The Contractor/Developer will restore the work site and adjacent disturbed areas to the condition existing before work began as a minimum. Any costs incurred by the City due to failure by the Contractor/Developer to clean up to the City's satisfaction will be charged to the account of the Contractor/Developer or his surety.

1023 RESTORATION OF PROPERTY

The Department will not accept any construction wherein public or private property has not been restored to a condition at least equal to its condition before commencement of construction. All streets, roads and highways shall be restored as required by the Department or the agency concerned with the highway in question. Work performed on private property shall be confined to the easements obtained and the area shall be properly vegetated (according to Section 2150), landscaping restored and all damaged improvements replaced or restored.

1024 RECORD DRAWINGS

A. Record Drawings, including As-Graded drawings, must include results of a post construction survey. The post construction survey shall include the following:

1. Final street grades.
2. Final elevations of all sanitary and storm sewer lines and structures including pipe inverts and structure top elevations.
3. Final adjusted stationing and/or coordinates of all streets, sanitary and storm sewer structures, service line connections, and water line valves and hydrants.
4. As Graded contours as shown on the grading and drainage plans (Master Drainage Plan).
5. Actual materials used.
6. Record drawings shall not include any future improvements

B. All easements or right-of-way revised during construction must be noted on the record plans and recorded easement documents must be submitted.

C. Electronic files of record drawings must be received by the City before final acceptance of any public improvement project.

D. Initial submittal shall consist of one full set of all project record drawings on 22” x 34” paper.

E. Final submittal shall consist of two compact discs (CD), each with a complete set of all project record drawings. Each drawing shall be saved as a tagged image format (TIF).Record drawings must include a signed Engineer's Certification stating that the drawings conform to construction records and post construction survey information and shall be dated and stamped “Record Drawing”.

1025 BONDS

A. Contractor/Developer Projects: A suitable maintenance bond, cash deposit, certified check, or other acceptable form of maintenance security shall be furnished to the City of Lee's Summit guaranteeing the maintenance of the construction involved in the public improvement project. The maintenance bond or other form of maintenance security for public streets (including subgrade), storm sewers, sanitary sewers, and/or water lines shall remain in effect for a period of three years after substantial completion and shall be in an amount equal to 50 percent of the total cost of the improvement. If more than one Contractor performs work on any infrastructure item, a separate bond must be provided by each Contractor for their portion of the work. The warranty period for all bonds will begin at the time of issuance of the Certificate of Substantial Completion by the City for all Improvements.

B. No project shall be accepted by the City prior to the submittal and acceptance of the maintenance bond(s) by the City Engineer.

1026 PARTIAL ACCEPTANCE OF WORK

The City reserves the right to accept and make use of any completed section of the work without obligating the City to accept the remainder of the work or any portion thereof. However, the warranty period for the accepted section shall not start until the project is complete and the City has issued a Certificate of Substantial Completion.

1027 SUBSTANTIAL COMPLETION AND FINAL ACCEPTANCE

A. A Certificate of Substantial Completion will be issued by a Public Works Inspector upon satisfactory completion of the Improvements (including an approved as-graded Master Drainage Plan) to a point where they can be used for their intended purposes. At that time, a punch list of all items remaining to be completed prior to final acceptance will be provided to the Contractor/Developer.

B. The Contractor/Developer has 90 days from the issuance of the Certificate of Substantial Completion to complete all punch list work on the project and submit the following items to the City Engineer.

1. Maintenance Bond or other acceptable form of maintenance security for 50% of the total construction cost for a period of three years after substantial completion.
2. Execution of Final Affidavit and Agreement.
3. Approval from the City for the water line bacteriological test.
4. Record Drawings –electronic files.
5. Compensation for Public Works Inspector overtime, when applicable.
6. Permanent offsite easements shall be recorded and a certified copy provided to the City.

In the event all work is not complete and all items submitted within 90 days, no additional building permits will be issued and inspections on any building permits issued for any building within the property described on the Certificate may be suspended at the discretion of the City.

C. A Certificate of Final Acceptance for the project will be issued when all requirements are fully met. A Certificate of Final Acceptance must be obtained prior to issuance of temporary or permanent occupancy for any building within the property described on the Certificates.

D. The City will re-inspect the public improvements prior to the expiration of the warranty period. Any defects noted as a result of this inspection shall be corrected by the Contractor/Developer at his expense upon written notification by the City. A written copy of the final inspection report will be forwarded to the Contractor/Developer.

SECTION 2100 - GRADING AND SITE PREPARATION

CITY OF LEE'S SUMMIT, MISSOURI
STANDARD SPECIFICATIONS

The City of Lee's Summit hereby adopts Section 2100 of the Kansas City Metropolitan Chapter of APWA Construction and Material Specifications, current edition. The following additions, deletions and/or revisions are adopted as a part of Section 2100 for use within Lee's Summit. Text in bold italics indicates revisions or additions to the APWA standard.

2102.2.B Excavation
Add the following to the definition of Excavation: ***"... and includes trenching for pipelines, utilities and structures."***

2102.2.C.2 Suitable Material
Add the following subparagraphs:

c. Trench Backfill in Paved Areas within Street or Alley Right of Way:

i. Narrow Trench: Suitable Backfill Material for trenches 24 inches or less in width and shall be Type A flowable fill.

ii. Standard Trench: Suitable Backfill Material for trenches between 24 to 48 inches wide shall be either Type A flowable fill or dense, well-graded aggregate base material. Aggregate base material shall meet the requirements for KDOT AB-3; MoDOT Types 1 or 5; or APWA 2202.2.

iii. Wide Trench: Suitable Backfill Material for trenches between greater than 48 inches wide shall be suitable material as specified for earth embankment in APWA Standard Specifications, Section 2102.2.C.

d. Suitable Backfill Material outside of paved areas within Right of Way, and all areas outside Right of Way, may be suitable material as specified for earth embankment in APWA Standard Specifications, Section 2102.2.C. Suitable Backfill Material may also be other trench backfill material(flowable fill or aggregate base) depending on site conditions, trench widths or at the direction of the City's on-site Inspector.

e. Bedding Aggregate shall be granular material meeting the following requirements:

Max Particle Size: 3/4 inch	***PI ≤ 10***
Passing #200 Sieve: ≤ 35%	***LL ≤ 40***

f. Flowable Fill (Type A): Controlled Low Strength Material (CLSM)

i. Description. This item shall govern for the backfilling of structures, pipes, and all spaces excavated for, and not occupied by new structures. It may be used as backfill

of concrete walls, as backfill to new culverts in lieu of soil backfill, as fill in abandoned structures, and for other uses as approved by the Engineer.

The CLSM shall be composed of portland cement, fly ash (optional), fine aggregate, coarse aggregate (optional), water, and a shrinkage compensator, proportioned as hereinafter provided or an acceptable mix as approved by the Engineer.

ii. Materials.

(a) Cement: The cement shall be either Type I or II portland cement.

(b) Fly Ash: Fly ash shall conform to the requirements of ASTM C 618 Class C.

(c) Air Entrainment: Admixture shall consist of an organic(s) compound which when added to the mix in accordance with the manufacturer's recommendation will result in air contents as prescribed by ASTM C 173 or C 231.

(d) Fine Aggregate: Fine aggregate shall be washed and consist of clean, hard, durable, and uncoated particles of natural or manufactured sand or a combination thereof, with or without a mineral filler. Aggregate shall be free from frozen materials or injurious amounts of salt, alkali, vegetable matter or other objectionable material.

Sieve Size	Percent Passing
3/4 inch	100
No. 200	0-10

(e) Coarse Aggregate: With the Engineer's approval, the CLSM backfill may be supplemented with sound, durable, clean rock or broken concrete (2" to 8" square) to minimize the quantity of CLSM material placed. The CLSM shall be placed to a depth of 2 feet. Clean aggregate may be added to the CLSM mixture until the top of the CLSM and the top of the aggregate are approximately equal. The process may be repeated as required until the fill is completed.

(f) Mixing Water: Mixing water shall be clean, and free from injurious amounts of sewage, oil, acid, alkali, salt, or organic matter. (Only potable water will be acceptable without testing).

iii. Mix Design. Unless otherwise shown on the Contract Drawings the Contractor may furnish either mix design type A or B. The following is given as typical mix design for trial mixes. Adjustments of the proportions of fine aggregate and/or water may be made to achieve proper solid suspension and optimum flowability with the approval of the Engineer. The mix design shall contain a shrinkage compensator as approved by the Engineer.

	CLSM MIX DESIGN TYPE A (REMOVABLE)
Strength	50 to 100 PSI
Cement Content	144 lbs
Water	396lbs
Sand	2698 lbs
Air Entrainment	13%
Class C Fly Ash	0 lbs

The shrinkage compensator shall be proportioned in accordance with the manufacturer's recommendations. The CLSM shall be transit mix. No blade mixing will be allowed.

2102.6.E Consolidated Rock Embankment

Delete the second paragraph and replace with the following:

Rock embankment shall be capped with 3 feet of soil material on all sides. The upper layer of rock shall be filled with a 6-inch thick layer of 3/4-inch choker stone prior to placing soil material. The soil cap material shall not contain material having a maximum dimension greater than 3 inches.

2102.6 Embankment

Add the following:

E. Testing:

1. ***Laboratory compaction test and index property test results for each material used on site shall be submitted to the Inspector prior to placement. Any work by Contractor prior to test submittals and subsequent City review and approval shall be work done at the Contractor's risk.***
2. ***In-Place Density/Moisture tests shall be taken at the frequency of 4 per day per spread, with a minimum of one test per lift.***
3. ***Test reports shall be submitted to the Inspector daily. The reports shall clearly indicate the location of all tests by street name, station and/or lot number, type of material, and elevation of test. The reports shall include the results of all tests (pass or fail) and all re-tests.***
4. ***All test reports shall be submitted prior to receiving approval of subgrade for subsequent. Pavement, curb, other surface features or utilities placed prior to receiving embankment approval shall be placed at the Contractor's risk.***

Replace Section 2103 Measurement and Payment with the following Section 2103 Excavation, Trenching and Backfill for Piping and Structures

2103. EXCAVATION, TRENCHING AND BACKFILLING FOR PIPING AND STRUCTURES

A. Dewatering

1. ***The Contractor shall maintain a dry and stable excavation, obtain necessary permits, and provide for the proper method of discharging water from the work site at all times until installation is completed***
2. ***The Contractor shall not allow hydrostatic pressure flotation or other adverse effects to cause damage to the structure or pipeline.***
3. ***Proper dewatering techniques are the Contractor's sole responsibility. All work performed by the Contractor that is adversely affected by his/her failure to adequately dewater trenches will be subject to rejection by the Inspector. The Contractor shall repair and/or replace affected structures or pipelines.***
4. ***The Contractor shall remove any water that may accumulate or be found in the trenches and other excavations made as part of the Work.***
5. ***Grading shall be done to prevent surface water from flowing into trenches or other excavations, and to maintain the flow of water in natural watercourses on or adjacent to the site. Any water accumulating in trenches or other excavations shall be removed by pumping or by other approved methods***

B. Trenching for Piping

1. ***The alignment, depth, and pipe subgrade of all gravity flow line trenches shall be determined by overhead grade lines parallel to the pipe invert.***
2. ***The Contractor shall not open more trench in advance of pipe laying than is necessary. Three hundred (300) feet will be the maximum length of open trench allowed on any line under construction. All open trenches shall be adequately protected.***
3. ***Trenching, boring, tunneling or other installation methods shall be completed with minimum inconvenience and disturbance to the general public.***
4. ***The Contractor shall perform excavation of materials encountered, regardless of material type, to the depths indicated on the drawings or as otherwise specified herein. Suitable backfill material shall be sorted and piled in an orderly manner a sufficient distance from the trench walls to avoid overloading and to prevent slides or cave-ins. All excavated materials not required or not suitable for backfill shall be removed and disposed of off the site by the Contractor as part of the Work.***

5. ***Areas where proposed pipe is at or above existing grade, embankment shall be placed and compacted prior to installing the pipe. Embankment shall be placed to finished grade, prior to trenching for pipe installation. For pipes deeper than 4 feet from finished grade, trenching may take place when the embankment is at least 4 feet above the proposed top of pipe elevation.***

6. ***Trenches that are parallel to structures, pavements or walls shall be no closer than 18 inches from the closest edge of footings or pavement. Also, no parallel trench shall extend in depth below a plane having a downward slope of 1 horizontal to 2 vertical starting from a line 9 inches above the bottom edge of footings or pavement. The bottom of pavement shall be the lowest improved section of pavement to include chemically stabilized subgrade or aggregate base layers.***

C. ***Trench Depths:***
All trenches shall be excavated to depths required for proper pipe embedment. Over-excavation shall be required when the subgrade is unstable. Over-excavated areas shall be backfilled with granular pipe embedment material, or other material approved by the Design Engineer.

D. ***Trench Widths:***
See applicable sections, details and manufacturers' recommendations for trench widths for water, sanitary and storm sewer installations.

E. ***Preparation of Pipe Subgrade:***
Pipe subgrade shall be prepared to provide uniform and continuous support of pipe. The trench bottom shall be evenly graded. Areas that are too high shall be shaved as required. Any portions of the trench that are found to be too low shall be filled with suitable materials, thoroughly compacted, and brought to true grade, allowing for placement of bedding material as shown in the standard details.

F. ***Trench Bottom in Rock Excavation:***
Where rock is encountered in excavation, the rock shall be removed to provide a minimum clearance of 6 inches below and 6 inches along each side of the pipe.

G. ***Replacement of Unsuitable Pipe Foundation Material***

1. ***If unstable subgrade conditions are encountered and it is determined by the Design Engineer that the excavation bottom will not provide suitable support, the Contractor shall remove all unstable or unsuitable material over the entire width of the trench to the depth required by the Design Engineer to provide a stable foundation. Removal shall not be less than 6 inches.***

2. ***Materials so removed shall be replaced with bedding aggregate material as specified in Section <u>2102.2.C.2.d.</u> Bedding material shall be mechanically compacted over the entire width of the trench and shall be brought to proper grade, shape, and elevation for the installation of the pipe as shown on the Drawings.***

H. Trench Walls: Undercutting of trench walls is not permitted.

I. Pipe Embedment: All water, sanitary sewer, and storm sewer pipe shall be bedded in bedding aggregate as specified in paragraph 2102.2.C.2.d.

1. ***Bedding shall cover the entire width of trench.***
2. ***The first layer of bedding placed on the bottom of excavation shall be at least 6 inches in thickness.***
3. ***Bedding at bottom of trench, in the middle 1/3 of trench under the pipe shall be loose.***
4. ***After pipe is place, bedding material shall be placed in layers in accordance with manufacturer's recommendations.***
5. ***Second layer of bedding material shall be placed under the lower haunches of the pipe up to the springline (center of pipe). Material shall be spaded to be place under haunches and compacted at the springline elevation prior to placing additional bedding material.***
6. ***The third layer of bedding material shall be placed to 6 inches over the top of pipe.***
7. ***Contractor shall take measures to prevent pipe from floating during placement of bedding material so that pipe maintains proper line and grade as shown on the plans.***

J. Trench Backfill

1. ***Backfill shall not be placed when material contains frost, is frozen, or a blanket of snow prevents proper compaction.***
2. ***The Contractor shall remove from the project site waste material, trees, organic material, rubbish, or other deleterious substances.***
3. ***All trash and debris shall be removed from the pipeline excavation prior to backfilling.***
4. ***Backfill material shall be carefully placed to avoid damage to or displacement of the pipe, other utilities or structures.***
5. ***Unless otherwise specified, all trenches and excavations around structures shall be backfilled to the original ground surface.***
6. ***Outside of paved areas, the backfill material shall be placed in layers not exceeding 8-inches in loose thickness and be compacted to at least 90% of maximum density at optimum moisture ± 2% as determined by ASTM D 698***
7. ***Each lift shall be compacted and tested to the required density prior to the next lift being placed. Tests shall be taken each lift with a minimum of one test per lot per lift. On larger lots or in right of way greater than one foot outside paved areas, tests shall be taken for each lift at maximum spacing of 300 feet.***

8. ***Trench Backfilling in Street or Alley R/W and under Pavement:***

   a. ***Aggregate backfill material placed between lines one foot behind curbs, or edge of uncurbed pavement, shall be compacted to at least 95% of maximum density at optimum moisture content ± 2% as determined by ASTM D698.***
   b. ***A minimum of one compaction test shall be taken for each lift of backfill for each road crossing or each 50 feet of trench length under pavement.***

9. ***Testing shall be performed by a qualified testing lab hired by the Contractor.***

10. ***Laboratory compaction test and index property test results for each material used on site shall be submitted to the Inspector prior to construction. Any work by Contractor prior to test submittals and subsequent City review and approval shall be work done at the Contractor's risk.***

11. ***Test reports shall be submitted to the Inspector daily. The reports shall clearly indicate the location of all tests by street name, station and/or lot number, type of backfill material, utility type, and depth of test. The reports shall include the results of all tests (pass or fail) and all re-tests.***

12. ***All test reports shall be submitted prior to receiving approval of subgrade for curb and pavement installation. Pavement, curb or other surface features placed prior to receiving subgrade approval shall be placed at the Contractor's risk.***

K. ***Flowable Fill / CLSM Installation***

1. ***The open ends of the area to be backfilled shall be plugged, and the void area filled without the use of a vibrator.***

2. ***Care shall be taken to prevent the movement of any structure from the designated location or intrusion of flowable backfill into undesirable locations. If such movement or intrusion occurs, the engineer may require the affected structure to be excavated and replaced to the proper grade at the contractor's expense.***

3. ***If flowable backfill is placed in more than one layer, the base layer shall be thoroughly roughened and all loose and foreign material removed before placing the next layer.***

4. ***No flowable backfill shall be covered or accepted until a minimum compressive strength of 30 psi has been attained, as demonstrated by failure to deform or crush underfoot when a pressure of approximately 30 psi is applied. If the backfill does not harden to support the required load, the backfill shall be removed and replaced with an acceptable material at the contractor's expense.***

5. ***Where CLSM is being placed over or adjacent to crushed stone backfill, a layer of filter fabric shall be installed between the two materials.***

6. ***CLSM Testing:***

a. ***Bearing strength shall be determined using penetration testing in accordance with ASTM C 403.***

b. ***The flow of CLSM shall be tested in accordance with ASTM C 939.***

c. ***Unit weight and yield shall be tested m accordance with ASTM C 138.***

d. ***Air content shall be tested in accordance with ASTM C 231.***

e. ***Sample and remix sample shall be tested in accordance with ASTM C 172.***

f. ***Consistency: Flowable backfill will be tested by filling an open-ended 3-inch diameter, 6-inch high cylinder to the top with the mixture and immediately pulling the cylinder straight up. The correct consistency of the mixture shall produce an approximate 8-inch diameter circular-type spread with no segregation. Adjustments to the proportions of fine aggregate or water may be made to achieve proper solid suspension and optimum flowability with approval from the engineer, except the theoretical yield shall be maintained at one cubic yard for the given batch weights.***

L. Trench checks

1. ***Install as specified in Section 3500 or where shown on the Drawings.***
2. ***The backfill above the trench check shall meet the specifications for backfill material.***

M. Excavation by Tunneling or Boring: Where depth of trench and soil conditions will allow it, tunneling may be required under pavement, railroad tracks, or other surface structures. Tunnel sections shall provide adequate clearance for pipe and workers for proper lining, grading, and jointing the pipe installed therein.

N. Excavation and Backfilling for Structures

1. ***All structure foundations shall be founded on stable, undisturbed subgrade. Excavation shall be sufficient to provide at least 12 inches clear between the outer surfaces of the structure (including formwork) and the embankment or timber that may be used to hold and protect the excavation.***
2. ***Unsuitable or unstable foundation soil that will not properly support the structure, as determined by the Design Engineer, shall be removed to the depth required and the excavation backfilled to the proper grade with compacted bedding material.***
3. ***All excavations for structure shall be kept dry; no reinforcing steel shall be installed in water; and no water shall be permitted to inundate the reinforcing steel before concrete has been placed.***
4. ***Backfill around Structures***

a. ***No backfill shall be placed over or around any structure until the concrete or mortar has attained a minimum strength of 2,000 psi and can sufficiently support the loads imposed by the backfill and construction operations without damage.***

b. ***The Contractor shall use utmost care to avoid any wedging action between the side of the excavation and the structure that would cause any movement of the structure. Any damage caused by premature or unbalanced backfill or by the use of equipment on or near a structure will be the responsibility of the Contractor.***

c. ***No rocks larger than 3 inches maximum dimension shall be placed within 1 foot of the exterior surface of any structure.***

d. ***No backfill material containing rock, or detritus from rock excavation, shall be placed in the upper 24 inches of the excavation.***

e. ***Large rock may be placed in the remainder of the backfill upon approval of the Engineer. Approved rock material shall be place so that it is well separated allowing proper compaction of soil backfill around the rock material.***

f. ***All excavation shall be backfilled to the lines and grades shown on the Drawings.***

g. ***After the required curing time, backfill shall be placed and compacted in layers. Contactor shall monitor impact of placement, vibration and related work so not to damage or disturb structures.***

h. ***Backfill shall be place in compacted in layers not exceeding 8-inches in loose thickness and be compacted to at least 95% of maximum density at optimum moisture ± 2% as determined by ASTM D 698. Each lift shall be compacted and tested to the required density prior to the next lift being placed.***

i. ***In no instance shall backfill be dumped, bulldozed, or otherwise deposited in bulk upon the newly constructed structure.***

O. Backfill of Drainage Course Crossings:

1. ***Excavation in rock to a distance of 10 feet beyond each bank (measured perpendicularly to the stream flow) shall be backfilled with concrete to the existing rock elevation. The excavation above the rock elevation shall be backfilled with soil above that concrete encasement or as indicated on the Drawings. The soil placed above the encasement shall be compacted to at least 95% of maximum density at optimum moisture ± 2 percent as determined by ASTM D 698.***

2. ***Pipe placed in an excavation in soil shall be encased in concrete to a minimum of 1 foot above and below the pipe and backfilled with soil above that concrete encasement or as indicated on the Drawings. The soil placed above the***

encasement shall be compacted to at least 95% of maximum density at optimum moisture ± 2% as determined by ASTM D 698.

P. Finishing:
Shall be in accordance with APWA Standard Specifications, Section 2102.7.

Q. Cleanup:
Shall be in accordance with APWA Standard Specifications, Section 2102.8.

SECTION 2150 – EROSION AND SEDIMENT CONTROL

CITY OF LEE'S SUMMIT, MISSOURI
STANDARD SPECIFICATIONS

The City of Lee's Summit hereby adopts Section 2150 of the Kansas City Metropolitan Chapter of APWA Construction and Material Specifications, current edition. The following additions, deletions and/or revisions are adopted as a part of Section 2300 for use within Lee's Summit. Text in bold italics indicates revisions or additions to the APWA standard.

2154.5.B (Silt Fence) Construction Requirements: Delete items 2 and 3, and replace with the following:

2. ***Silt fence shall not be used in swales, drainage-ways, channels and other conduits of concentrated stormwater flow.***
3. ***Silt fence shall not be used to direct or divert water.***

SECTION 2200 - PAVING

APPENDIX A

FLY ASH TREATED SUBGRADE STABILIZATION

1.01 DESCRIPTION

1.01.1 This work shall consist of the addition of self-cementing fly ash, mixing and compacting the material to the required density to develop a stabilized subgrade section. This item applies to natural ground or fills and shall be constructed as specified herein and in conformity with the typical sections, lines and grades as shown on the plans or as established by the Engineer.

1.02 MATERIALS

1.02.1 **FLY ASH**. Fly Ash shall comply with the physical requirements of ASTM D-5239 6.4 maintaining a minimum compressive strength of 500 psi at 7 days and the chemical requirements of ASTM Specifications C-618, Section 3.3 when sampled and tested in accordance with Sections 5, 6 and 8, unless otherwise shown on the plans. Fly Ash shall be of the Class "C" designation. The source of the ash shall be selected by the Contractor and approved by the Engineer in advance of stabilization operations in order that the required laboratory tests can be completed prior to construction without delaying the work. The fly ash shall conform to Department of Natural Resources fly ash regulations. Certification shall be provided by the supplier that the fly ash used on the project meets the above criteria.

1.03 WATER

1.03.1 The water use in the stabilized mixture shall be clean, clear, and free of sewage, vegetable matter, oil, acid and alkali. Water known to be potable may be used without testing. All other sources shall be tested in accordance with ASSHTO T26 and approved by the Engineer.

1.03.2 **SOIL**. The soil for this work shall consist of materials on the site or selected materials from other sources and shall be uniform in quality and gradation, and shall be approved by the Engineer. The soil shall be free of roots, sod, weeds, and stones larger than 2-1/2 inches.

1.04 COMPOSITION

1.04.1 **FLY ASH.** Fly Ash shall be applied at a minimum rate of 12 percent. The actual rate shall be determined by the testing lab.

1.04.2 **TOLERANCES.** At final compaction, the fly ash and water content for each course of subgrade treatment shall conform to the following tolerances:

Material	Tolerance
Fly Ash	+ 0.5%
Water	0% to +2%

1.04.3 **THICKNESS.** The thickness of the completed, compacted fly ash/soil mixture shall be 8 inches or as called out in the plans or specifications. The thickness shall not be less than the specified minimum. If when checked for minimum thickness it is found to be less that the ½ inch tolerance the contractor shall correct the area represented by the checked location.

1.05 EQUIPMENT

1.05.1 **EQUIPMENT.** The machinery, tools, and equipment necessary for proper execution of the work shall be on the project and approved by the Engineer prior to beginning construction operations. Blending of the soil-fly ash mixture shall be accomplished by a direct hydraulic drive pulvamixer. Compaction shall be achieved using sheepsfoot or padfoot rollers. Rubber-tired rollers will not be permitted except for finish rolling of the stabilized section

All machinery, tools and equipment use shall be maintained in a satisfactory and workmanlike manner.

Fly ash shall be stored and handled in closed weatherproof containers until immediately before distribution. Fly ash exposed to moisture prior to mixing with soils shall be discarded. If fly ash is furnished in trucks, each truck shall have the weight of fly ash certified on public scales or the Contractor shall place a set of standard platform truck scales or hopper scales at a location approved by the Engineer.

1.06 CONSTRUCTION METHODS

1.06.1 **GENERAL.** It is the primary purpose of this specification to secure a completed section of treated material which contains a uniform fly ash/soil mixture with no loose or segregated areas; has a uniform density and moisture content: is well bound for its full depth. It shall be the responsibility of the Contractor to regulate the sequence of his/her work; to process a sufficient quantity of material to provide a completed section as shown on plans; to use the proper amounts of fly ash; to achieve final compaction within the specified time; to maintain the work; and to rework the lifts as necessary to meet the above requirements.

1.06.2 **WEATHER LIMATATION.** The soil-fly ash mixture shall not be mixed while the soil temperature is below 40°F or when conditions indicate that the atmospheric temperatures may fall below 40°F within 24 hours, when it is rainy, or when soil or subgrade is frozen.

1.06.3 **PREPARATION OF SUBGRADE.** Before other construction operations are begun, the area where the fly ash stabilized material will be placed shall be cut and shaped in conformance with the lines and grades shown on the plans.

All areas shall be firm and able to support, without displacement, the construction equipment and the compaction hereinafter specified. Soft or yielding subgrade shall be corrected and made stable by scarifying, adding fly ash, and compacting until it is of uniform stability.

Where the stabilized section is to extend below the cut surface, the fly ash shall be distributed uniformly across the surface in a quantity sufficient to provide the specified ash content. The fly ash shall be incorporated with a pulvamixer with water being added to achieve the specified moisture content.

1.06.4 **MOISTURE CONTROL.** Moisture control shall be achieved through use of a pulvamixer equipped with a spray bar in the mixing drum capable of applying sufficient quantities of water to achieve the required moisture content for the soil-fly ash mixture. The system shall be capable of being regulated to the degree necessary as to maintain moisture contents within the recommended range.

Required moisture contents will be established by the Engineer based on laboratory tests with the site soils and specific fly ash to be used for the treatment. Final moisture content of the mix, immediately prior to compaction shall not exceed the specified range of moisture content. If moisture contents exceed the specified limits, additional fly ash may be incorporated to lower moisture contents to the required limits. Lowering moisture contents by aeration following addition of fly ash will not be allowed.

1.06.5 **APPLICATION OF FLY ASH.** Immediately prior to application of fly ash, the areas shall be bladed to allow uniform distribution of fly ash. The fly ash shall be spread only on that area where the complete placement operation can be completed within 2 hours. The application and mixing of the fly ash with the soil shall be accomplished by the methods hereinafter described.

The fly ash shall be spread uniformly over the top of the subgrade by an approved screw-type auger spreader box or other approved spreading equipment. The amount of fly ash spread shall be the amount required for mixing to the specified depth which will result in the percentage determined in the job mix formula.

The fly ash shall be distributed at a uniform rate and in such manner as to reduce the scattering of fly ash by wind to a minimum. Fly ash shall not be applied when wind conditions, in the opinion of the Engineer, are detrimental to a proper application or becomes objectionable to adjacent property owners.

1.06.6 **MIXING.** The mixing procedure utilized shall be Dry Placing as hereinafter described.

The full depth of the treated subgrade shall be mixed with a rotary pulvamixer which utilizes a direct hydraulic drive. Fly ash shall not be left exposed for more than 30 minutes after distribution. Water shall be added through use of a pulvamixer equipped with a spray bar in the mixing drum capable of applying sufficient quantities of water to achieve the required moisture content of the soil-fly ash mixture. The system shall be capable of being regulated to the degree as to maintain moisture contents within the recommended range.

Required moisture contents shall be established based on laboratory tests with the site soils and specific fly ash to be used for the treatment. Final moisture content of the mix, immediately prior to compaction, shall be determined in accordance with ASTM D 698 and shall not be below or more than 2% above the optimum moisture content for maximum density of the mix. If moisture contents exceed the specified limits, additional fly ash may be added to lower the moisture content to the required limits. Lowering moisture contents by aeration following addition of the fly ash will not be permitted.

If the soil-fly ash mixture contains clods greater than 1-1/2" in size, they shall be reduced in size by additional pulverization.

1.06.7 **COMPACTION.** Compaction of the soil-fly ash mixture shall begin immediately after mixing of the fly ash and be completed within two hours following incorporation of fly ash. Compaction of the mixture shall begin at the bottom and shall continue until the entire depth of mixture is uniformly compacted to the specified density using sheep foot or pad foot rollers. A test for both density and moisture content of the soil-fly ash mixture shall be taken for each 750 square yards of material placed.

The field density of the compacted mixture shall be at least 95 percent of the maximum density of laboratory specimens prepared from samples taken from material in place. The specimens shall be compacted and tested in accordance with ASTM D 698. The in-place field density shall be determined in accordance with ASTM D 1556, ASTM D 2167 or ASTM D 2922.

When ASTM D 2922 is utilized for testing purposes, the nuclear gage shall be calibrated in accordance with Annex A1. Calibration and operation of the gage shall be in accordance with the requirements of the manufacturer. The operator of the nuclear gage must show evidence of training and experience in the use of the instrument. The gage shall be standardized daily in accordance with ASTM D 2922, paragraph 8.

Use of ASTM D 2922 results in a wet unit weight, and when using this method, ASTM D 3017 shall be used to determine the moisture content of the material. The moisture gage shall be standardized daily in accordance with ASTM D 3017, paragraph 7.

All irregularities, depressions, or weak spots which develop shall be corrected immediately by scarifying the areas affected, adding or removing material as required and remixing and re-compacting with additional fly ash if beyond the 2 hour limit. The

surface of the course shall be maintained in a smooth condition, free from undulations and ruts, until other work is placed thereon or the work is accepted.

In addition to the requirements specified for density, the full depth of the material shown on the plans shall be compacted to the extent necessary to remain firm and stable under construction equipment. After each section is completed, tests will be made by the testing lab. If the material fails to meet the density requirements, it shall be reworked to meet these requirements. Throughout this entire operation, the shape of the course shall be maintained by blading, and the surface upon completion shall be smooth and shall conform with the typical section shown on the plans and to established lines and grades. Should the material, due to any reason or cause, lose the required stability, density and finish before the work is accepted, it shall be reprocessed, recompacted and refinished at the sole expense of the Contractor. Reprocessing shall follow the same pattern as the initial stabilization including the addition of fly ash.

1.06.8 **FINISHING AND CURING.** After the final layer or course of the fly ash treated subgrade has been compacted, it shall be brought to the required lines and grades in accordance with the typical sections. The finished surface shall not vary more than 3/8 inch when tested with a 16-foot straightedge applied parallel with and at right angles to the pavement centerline. Any variations in excess of this tolerance shall be corrected by the Contractor, at his/her own expense, in a manner satisfactory to the Engineer.

After the fly ash treated course has been finished as specified herein, the surface shall be protected against rapid drying by either of the following methods for a period of not less than three days or until the pavement section is placed.

1) Maintain in a thorough and continuously moist condition by sprinkling.

2) Apply a 2-inch layer of earth on the completed course and maintain in a moist condition.

1.07 MAINTENANCE.

1.07.1 The contractor shall maintain, at his/her own expense, the entire fly ash-treated subgrade in good condition from the start of work until all the work has been completed, cured, and the pavement is placed. Heavy equipment shall not be allowed on the treated subgrade until capable of supporting the loads.

1.08 TESTING & OBSERVATION.

1.08.1 The contractor shall hire an established testing lab to determine the amount of fly ash to be added, but no less than the minimums. The testing lab shall also provide testing of the constructed stabilization and provide a certification to the city stating that all stabilization meets or exceeds the requirements of the City of Lee's Summit. The certification shall be backed up with attached testing reports to include at least the moisture/density curves for

the mixture, compaction testing (1 test per 750 SY of material in place), field notes assuring the correct quantity of fly ash has been incorporated, that the fly ash has been incorporated and compacted within the time limits in this specification, and that the minimum thickness has been placed.

No deviations from the specification shall be made except upon written approval from the City Engineer.

END OF SECTION

APPENDIX B

LIME TREATED SUBGRADE STABILIZATION

1.01 DESCRIPTION

This work shall consist of the addition of lime, mixing and compacting the material to the required density to develop a stabilized subgrade section. This item applies to natural ground or fills and shall be constructed as specified herein and in conformity with the typical sections, lines and grades as shown on the plans or as established by the Engineer.

2.01 MATERIALS

Materials to be lime stabilized shall be clayey soils free of rubble, rubbish, and vegetation and shall be tested by the Contractor at his expense and approved by the City Engineer prior to commencement of lime treatment operations.

Lime shall be high-calcium or dolomitic quicklime conforming to the definitions in ASTM Designation C51 or Hydrated Lime for Soil stabilization meeting ASTM C977.

High-calcium quicklime shall contain not less than one hundred and thirteen percent (113%) calcium hydroxide $Ca(OH)_2$, as determined by California Test Method 414.

Dolomitic quicklime shall contain less than fifty-seven percent (57%) calcium oxide, CaO, and not less than ninety-five percent (95%) combined calcium oxide, CaO, and magnesium oxide, MgO, as determined by California Test 404.

Water for use in subgrade stabilization shall be clean and potable and shall be added during mixing, remixing and compaction operations, and during the curing period to keep the cured material moist until covered.

Lime shall be applied at a minimum rate of 5 percent. The actual rate shall be determined by the testing lab.

3.01 TOLERANCES

At final compaction, the fly ash and water content for each course of subgrade treatment shall conform to the following tolerances:

Material	Tolerance
Fly Ash	+ 0.5%
Water	0% to +2%

4.01 THICKNESS

The thickness of the completed, compacted lime/soil mixture shall be 8 inches or as called out in the plans or specifications. The thickness shall be within ½ inch of the specified minimum thickness. If when checked for minimum thickness it is found to be more than the ½ inch tolerance the contractor shall correct the area represented by the checked location.

5.01 PREPARING MATERIAL

The material to be treated shall contain no rocks or solids larger than one and one-half inches (1-1/2" inches) in maximum dimension. Removing and disposing of rocks or solids larger than 1-1/2" inches in maximum dimension shall be the sole responsibility of the Contractor.

6.01 MIXING

The rate of spread per linear foot of blanket shall not vary more than five percent (5%) from the designated rate.

Mixing equipment shall be equipped with a visual depth indicator showing mixing depth, an odometer, or foot meter to indicated travel speed and a controllable water additive system for regulating water added to the mixture.

Mixing equipment shall be the type that can mix the full depth of the treatment specified and leave a relatively smooth bottom of the treated section.

Mixing and re-mixing, regardless of equipment used, will continue until the material is uniformly mixed (free of streaks or pockets of lime), moisture is at least two percent (2%) over optimum and the mixture complies with the following requirements:

Sieve Size	Minimum Percent Passing
1-1/2" inches	100
1" inch	95
No, 4	60

The entire mixing operation shall be completed within seventy-two (72) hours of the initial spreading of lime, unless otherwise approved by the City Engineer.

7.01 SPREADING AND COMPACTING

In lieu of construction joints, the Contractor may mix three (3") inches into the previous day's work to assure a good bond to the adjoining work provided that the lime treatment

operation is being performed using cross shaft rotary mixers as determined by the City Engineer.

The lime treated soil shall be compacted to at least 95% of the soils maximum laboratory density (ASTM D698).

In addition to the requirements specified for density, the full depth of the material shown on the plans shall be compacted to the extent necessary to remain firm and stable under construction equipment. After each section is completed, tests will be made by the testing lab. If the material fails to meet the density requirements, it shall be reworked to meet these requirements. Throughout this entire operation, the shape of the course shall be maintained by blading, and the surface upon completion shall be smooth and shall conform with the typical section shown on the plans and to established lines and grades. Should the material, due to any reason or cause, lose the required stability, density and finish before the work is accepted, it shall be reprocessed, recompacted and refinished at the sole expense of the Contractor. Reprocessing shall follow the same pattern as the initial stabilization including the addition of fly ash.

8.01 FINISHING AND CURING

After the final layer or course of the fly ash treated subgrade has been compacted, it shall be brought to the required lines and grades in accordance with the typical sections. The finished surface shall not vary more than 3/8 inch when tested with a 16-foot straightedge applied parallel with and at right angles to the pavement centerline. Any variations in excess of this tolerance shall be corrected by the Contractor, at his/her own expense, in a manner satisfactory to the Engineer.

The surface of each compacted layer of lime-treated material shall be kept moist until covered by a subsequent layer of lime-treated or other material for a period not to exceed three (3) days or by applying a curing seal immediately following final trimming and rolling of the lime-treated layer. Curing seal shall be applied at a rate of 0.15 gallons per square yard of surface.

No traffic of any kind will be allowed on the grade for a minimum of 3 days (72) hours following application of the curing seal.

Asphalt concrete shall not be place within seven (7) days following application of the curing seal, unless otherwise approved by the City Engineer.

9.01 MAINTENANCE

The contractor shall maintain, at his/her own expense, the entire fly ash-treated subgrade in good condition from the start of work until all the work has been completed, cured, and the pavement is placed. Heavy equipment shall not be allowed on the treated subgrade until capable of supporting the loads.

9.02 TESTING AND OBSERVATION

The contractor shall hire an established testing lab to determine the amount of lime to be added, but no less than the minimums. The testing lab shall also provide testing of the constructed stabilization and provide a certification to the city stating that all stabilization meets or exceeds the requirements of the City of Lee's Summit. The certification shall be backed up with attached testing reports to include at least the moisture/density curves for the mixture, compaction testing (1 test per 750 SY of material in place), field notes assuring the correct quantity of lime has been incorporated, that the lime has been incorporated and compacted within the time limits in this specification, and that the minimum thickness has been placed.

No deviations from the specification shall be made except upon written approval from the City Engineer.

END OF SECTION

SECTION 2300 - INCIDENTAL CONSTRUCTION

CITY OF LEE'S SUMMIT, MISSOURI
STANDARD SPECIFICATIONS

The City of Lee's Summit hereby adopts Section 2300 of the Kansas City Metropolitan Chapter of APWA Construction and Material Specifications, current edition. The following additions, deletions and/or revisions are adopted as a part of Section 2300 for use within Lee's Summit. Text in bold italics indicates revisions or additions to the APWA standard.

2301.9 Detectable Warnings
Delete Paragraph C and replace with the following:

C. Material: The material used to provide contrast shall be an integral part of the walking surface. The material for detectable surface shall consist of:

1. Grouted-in-Place Clay Pavers

a. Paving brick shall be 2 ¼" x 3 5/8" x 7 5/8" and shall meet the requirements of ASTM C902 for Class SX, Type 1 brick and ASTM C1272.

b. The bricks shall be placed in a Soldier Course pattern on type A and Type C ramps, or in the Herringbone or Soldier Course pattern on Type B ramps.

c. The bricks shall be saw cut only and any brick shall not be less than 25% of a full brick.

d. Type M mortar shall be used for the setting bed and grouted joints in accordance with ASTM C270, Table 1 (Masonry Cement Type only).

2. Cast-in-Place Tiles: Acceptable products include Detectable Warning System's E-Z-Set Ceramic Composite Detectable Warning Panels, Armor Tile's Cast In Place System, ADA Solution's Composite Paver, CASTinTACT Detectable Warning Panel, or approved equal.

3. ***Color for all surfaces options shall be 'brick red'. Surface applied retrofit tiles shall not be allowed.***

2302 Asphalt Sidewalks, Driveways, and Bicycle/Pedestrian Paths
Add the following statement to Paragraph 2302.1 Summary: ***Asphalt shall not be allowed for sidewalks, driveways and bicycle/pedestrian paths within the public right-of-way.***

2305 Maintenance of Traffic: Delete section in its entirety.

2306 Pavement Markings: Delete section in its entirety.

SECTION 2400 – SEEDING AND SODDING

CITY OF LEE'S SUMMIT, MISSOURI
STANDARD SPECIFICATIONS

The City of Lee's Summit hereby adopts Section 2400 of the Kansas City Metropolitan Chapter of APWA Construction and Material Specifications, current edition**.**

SECTION 2600 - STORM SEWERS

CITY OF LEE'S SUMMIT, MISSOURI
STANDARD SPECIFICATIONS

The City of Lee's Summit, Missouri's hereby adopts Section 2600 of the Kansas City Metropolitan Chapter of APWA Construction and Material Specifications, current edition. The following additions, deletions and/or revisions are adopted as a part of Section 2600 for use within Lee's Summit, Missouri.

2602.2 Materials
Delete Paragraph B (excluding tables) and replace with the following:

B. Aluminized Corrugated Metal Pipe (CMP)

1. ***Sheet steel for aluminized CMP shall conform to AASHTO M 274.***
2. ***Pipe manufacture shall conform to AASHTO M 36.***
3. ***Minimum wall thickness shall be 0.079 inches (14 gauge) for circular pipe 30 inches in diameter and smaller as well as for equivalent arch pipe. Larger pipe sizes shall conform to the table.***
4. ***Joints shall be made with a bolted aluminized steel band assembly.***
5. ***End sections shall be flared and shall have a rolled top edge.***
6. ***All fittings shall be fabricated from the same materials as the pipe.***

Delete Paragraphs D. Vitrified Clay Pipe, and E. Ductile Iron Pipe, and substitute the following as Paragraph D.

D. High Density Polyethylene (HDPE) Pipe

1. ***High density polyethylene pipe shall conform to AASHTO M294, type S (non-perforated circular cross section with corrugated outer surface and a smooth inner surface) for pipe diameters of 15 inches to 60 inches, inclusive.***
2. ***Joints may be either bell& spigot gasketed joints or made with external coupling bands. Joint integrity shall conform to the performance requirements of AASHTO M294.***
3. ***Fittings and coupling bands shall be fabricated from the same material as the pipe and conform to AASHTO M294.***
4. ***Coupling bands shall cover at least two full corrugations on each section of pipe and shall prevent the infiltration of soil into the pipe.***

2602.2.H.3 Mix Design
Revise first sentence to read: ***All flowable fill shall be mix design type A unless approved by the City Engineer.***

2602.3 Construction Details
Delete Paragraph A and Subparagraphs 1 through 7 entirely. See Section 2100 for trenching and backfill specifications.

2602.3.B.4 Bedding
Revise first sentence to read as follows:

The class of bedding required shall be as indicated on the Contract Drawings or standard details except that as a minimum the bedding shall be ***bedding aggregate as specified in Section 2100 placed to a minimum depth of 6 inches below the pipe to 6 inches above the pipe,*** or in the case of a RCB, one-half of the height.

2602.3.B Laying and Jointing
Add the following as Paragraph 6:

6. HDPE pipe shall be installed in accordance with ASTM Recommended Practice D2321.

2602.3 B.5.c Structure Connections
Modify the section such that on rectangular or square curb inlets or junction boxes the incoming and outgoing pipes shall extend past the inside wall face by 3 inches and have grout or concrete applied to the area around the pipe and the wall to create a smooth, rounded appearance.

2602.3. C Backfill
In Figure 1, revise the dimension for granular bedding in earth to 6 inches. Delete Subparagraph 2 entirely.

2604.2. A Concrete Mixes
Revise to read as follows:

Concrete shall be MCIB Mix Number A-558-1-2, except concrete used for soil stabilization, pipe cradles, filling, leveling courses and other similar purposes may be MCIB Mix Number A535-1/2-4.

2604.2 F Brick
Delete Paragraph entirely.

2604.2 H Metal Castings
In first sentence, revise Class 35B to minimum of Class 30.

2604.2 I Steel End Sections
Revise first sentence to read as follows:

Steel end sections shall be fabricated from ***aluminized*** base metal as specified in Section 2602….

2604.3 A 1 Precast Structures
Add the following:
All precast square or rectangular structures shall meet the requirements of ASTM C 913.
When installed, all gaps and openings intended to be closed, shall be sealed with grout, concrete or other approved material.
If an adjustment is required for the top slab which is less than or equal to 6 inches, the adjustment shall be made with brick and mortar with a coating of cement on both faces, if the adjustment is greater than 6 inches, the adjustment shall be made with dowelled concrete.

Dowels shall be bars embedded 6 inches into the walls. All reinforcement shall be the same size and spacing as the wall steel.

2605 OPEN CHANNELS

Delete reference to Grouted Riprap in Paragraph 2605.2 B3, and delete Paragraphs 2605.2 E and 2605.3 E entirely.

SECTION 2700 – STRUCTURES

CITY OF LEE'S SUMMIT, MISSOURI
STANDARD SPECIFICATIONS

The City of Lee's Summit hereby adopts Section 2700 of the Kansas City Metropolitan Chapter of APWA Construction and Material Specifications, current edition.

Add the following:

Reinforced Box Culverts: Either precast or cast in place shall have a 3 inch thick grade slab cast under the bottom slab. The grade slab shall be at least as wide as the structure and shall stop short of the toe walls. Commercial grade concrete may be use with minimum 2500 psi compressive strength. The slab should be set with good grade control to match the elevations required for the culvert.

SECTION 2800 – STREET LIGHTING

CITY OF LEES SUMMIT, MISSOURI
STANDARD SPECIFICATIONS

The City of Lee's Summit hereby replaces Section 2800 of the Kansas City Metropolitan Chapter of APWA Construction and Material Specifications with the City of Lee's Summit Design and Construction Manual Section 2800.

TABLE OF CONTENTS

2801 GENERAL 3
2801.1 Scope 3
2801.2 Codes and Standards 3
2801.3 Modification of Specifications 3
2801.4 Appurtenances 3
2801.5 Incidental Work and Parts 3
2801.6 Existing Lighting 3
2801.7 Permits and Inspections 3
2801.7.1 Owner's Building Permit 3
2801.8 Electrical Service 4
2801.9 Maintenance Work 4

2802 MATERIALS AND EQUIPMENT 4
2802.1 Scope 4
2802.2 Street Light Poles 4
2802.3 Bracket Arms 5
2802.4 Screw-In Anchor Bases 5
2802.5 Flowable Backfill 5
2802.6 Concrete 5
2802.7 Reinforcing Steel for Concrete Bases 5
2802.8 Anchor Bolts 6
2802.9 Luminaires 6
2802.9.1 Cobra Head Luminaires 6
2802.9.2 Post-Top Luminaire 7
2802.10 Lamps 7
2802.11 Conduit 7
2802.11.1 Polyvinyl Chloride (PVC) 7
2802.11.2 High Density Polyethylene (HDPE) 7
2802.11.3 Galvanized Rigid Steel (GRS) 8
2802.11.4 Cable-In-Duct 8
2802.12 Pull and Junction Boxes 8
2802.13 Cable 8
2802.13.1 Distribution Cable 8
2802.13.2 Pole and Bracket Cable 9
2802.14 Break-Away Fused and Non-Fused Connectors 9
2802.15 Splices 9
2802.15.1 Resin Splice Kits 9

2802.16 Power Supplies 9
2802.16.1 Cabinets 9
2802.16.2 Photoelectric Cells 10
2802.16.3 Contactors, Relays, and Terminal Blocks 10
2802.16.4 Circuit Breakers 10
2802.16.5 Lightning Arrestors 10
2802.17 Spare Equipment 10

2803 CONSTRUCTION REQUIREMENTS 10
2803.1 Scope 10
2803.2 Screw-in Anchor Base Installation 11
2803.3 Concrete Base Installation 11
2803.4 Conduit Installation 12
2803.4.1 External Conduit on Structure 13
2803.4.2 Trenching 14
2803.4.3 Plowing 14
2803.4.4 Boring 14
2803.5 Pull and Junction Box Installation 15
2803.6 Power Supply Installation 15
2803.7 Circuit Wiring 15
2803.8 Cable-In-Duct Installation 16
2803.9 Street Light Pole Installation 16
2803.9.1 Bracket Arm Installation 16
2803.9.2 Cover Skirt 17
2803.9.3 Luminaire Installation and Adjustment 17
2803.9.4 Lamp Installation 17
2803.10 Electrical Connections 17
2803.11 Grounding 17
2803.12 System Testing 18
2803.12.1 Burn Test 18
2803.13 Maintenance Information 18
2803.14 As-Built Plans 18
2803.15 Final Clean Up 18

2804 MEASUREMENT AND PAYMENT 19

STREET LIGHTING

2801 GENERAL

2801.1 Scope
This work shall consist of furnishing of all material, equipment, and labor for the installation and testing of a complete, operational street lighting system.

2801.2 Codes and Standards
All work and material shall be in accordance with the latest requirements of the Illuminating Engineering Society of North America (IESNA), National Electrical Code (NEC), National Electrical Safety Code (NESC), Standards of the American Society of Testing Materials (ASTM), American Standards Associations (ASA), National Electrical Manufacturers Association (NEMA), and all applicable local ordinances. The standard referred to shall be the latest revision of said standard as amended at the time of the Advertisement, except as noted on the Plans or in the Project Special Provisions.

2801.3 Modification of Specifications
These Specifications may be modified or deleted by appropriate items in the Project Special Provisions or by written authorization by the City Engineer.

2801.4 Appurtenances
All appurtenances shall be installed as shown on the Plans, or as specified in the Project Special Provisions. Any deviations must be established by the Contractor and authorized by the City Engineer.

2801.5 Incidental Work and Parts
Work incidental to the installation of a street lighting system that is not covered in these Specifications shall be performed in accordance with the City of Lee's Summit specifications and standards. All incidental parts, which are not shown on the Plans or specified in the Specifications and which are necessary to complete the street lighting system, shall be supplied and installed by the Contractor to the satisfaction of the City Engineer. No additional payments will be made for incidental work or parts.

2801.6 Existing Lighting
Existing lighting shall be maintained in effective operation by the Contractor except for shutdowns with approval from the City Engineer for alterations or final removal. The Contractor shall take all precautions necessary to minimize the downtime of the existing street lighting systems to be modified.

2801.7 Permits and Inspections
The Contractor shall contact the Public Works Department before any project work begins to notify the City Engineer of the construction schedule and to request project inspections. The Contractor is responsible for obtaining all necessary permits from the City, and is responsible for all associated costs, before any work can begin.

2801.7.1 Owner's Building Permit
The Contractor is responsible for obtaining the owner's building permit from the City's Codes Administration Department before electrical service can be delivered to a power supply. The Contractor shall contact the City's Codes Administration Division for an electrical inspection when each power supply is ready for operation. The Inspector will obtain an address for each power supply, which the Contractor shall use when dealing with the electrical utility company.

2801.8 Electrical Service

The Contractor is responsible for contacting the electrical utility company in advance to schedule delivery of service to each power supply. The City shall pay the electrical utility company's fees to deliver electrical service. The Contractor shall be billed for all electrical utility service charges until the entire project is substantially complete and the burn test is successfully completed. After those milestones the electrical service can be transferred to the City.

2801.9 Maintenance Work

The Contractor is responsible for making all repairs and replacements, including downed poles, damaged or cut cables, and burnt out lamps, to the street light system, regardless of the cause or responsible party, until the work is determined by the City to be substantially complete.

2802 MATERIALS AND EQUIPMENT

2802.1 Scope

This section governs the furnishing of all luminaires, poles, conduits, cables, and other material and equipment supplied by the Contractor, as required, to complete the street lighting system as shown on the Plans, the Standard Drawings, and as specified in the Project Special Provisions. All lighting equipment shall be of new stock unless the contract provides for relocation of existing units or use of units furnished by others. New equipment and material shall be of the best grade, and shall meet the approval of the City Engineer.

2802.2 Street Light Poles

The type of pole and length of bracket arm shall be as specified on the Plans. This specification is in addition to the City of Lee's Summit "Pole and Luminaire Details" Standard Drawing, which describes the Specifications and pertinent design details. It is the responsibility of the fabricator to verify and attest that the material sizes proposed are structurally adequate and in full compliance with this specification and Standard Drawings.

The aluminum street light pole shaft assembly shall be spun from one piece of seamless tubing, and after fabrication it shall have mechanical strength of not less than T6 temper. The cross section of the pole shall be round, and the shaft shall be fabricated in a continuous true taper from at least 6" above the hand hole to the top of the shaft. The shaft shall have a vibration damper bolted to the inside of the shaft, except for the 14-foot poles. The shaft shall have no longitudinal or circumferential welds, except at the lower end, joining the shaft to the shoe base. The shaft shall have a factory applied protective paper wrapper conforming to the manufacturer's standard practice to protect the shaft during shipping. For all poles except the 14-foot poles, the top of the shaft shall be equipped with a cast aluminum removable pole cap held securely in place by means of set screws. All 14-foot poles shall have a 3" O.D. slipfitter end, without a tenon, for mounting the post-top luminaire.

Pole dimensions shall be as specified on the Standard Drawings. It is the responsibility of the fabricator to verify and attest that the material sizes proposed are structurally adequate and in full compliance with this specification and the pole detail drawing.

The aluminum shoe base shall be a permanent mold casting. The base shall be free of cracks, pits, and blow holes and of sufficient size and strength to withstand full design loads. The base shall telescope the shaft; and one weld shall be on the inside of the base at the end of the shaft while the other weld shall be on the outside at the top of the base. The shoe base and the two (2) welds shall develop the full strength of the pole assembly. The base shall be cast with four (4) slotted

holes to receive the anchor/connecting bolts and tapped holes for attaching the four (4) cast aluminum alloy removable bolt covers provided for each pole. The bolt covers shall attach to the upright portion of the body of the base. The bolt circle diameter is provided in standard the drawings.

If poles are to be placed on existing bases or structures with anchor bolts in place, the Contractor shall furnish poles with a shoe base to fit the anchor bolt spacing.

2802.3 Bracket Arms

The bracket arm assembly shall be a one piece welded assembly consisting of an upper arm and lower arm (brace) securely joined by a vertical strut and a connector or weld at the outboard end of the arm assembly. The upper arm shall be tapered by cold working from round tubing. After tapering, the upper arm shall then be flattened to produce an elliptical cross-section with the major diameter in the horizontal plane, parallel to the wind. The outboard end of the upper arm shall remain round with a two inch (2") slipfitter for mounting the luminaire. The lower arm shall be 2 inch (2”) IPS aluminum pipe. The outboard end of the lower arm (brace) shall be covered by an end cap. The bracket arm shall be capable of being mounted to the pole shaft with aluminum clamp-on style plates. Small holes shall be drilled at the ends of both arms on the bottom side to allow for drainage of condensation.

All poles, except 14-foot poles, shall be attached to a cast aluminum breakaway base sized according to the Standard Drawings. The breakaway base shall conform to the breakaway criteria of *AASHTO Standard Specifications for Structural Supports for Highway Signs, Luminaires, and Traffic Signals*, 1994 edition.

2802.4 Screw-In Anchor Bases

Screw-in anchor bases shall be of the size and type specified in the Standard Drawings, based on the pole mounting height. It is the responsibility of the fabricator to verify and attest that the material sizes proposed are structurally adequate and in full compliance with the Standard Drawings.

2802.5 Flowable Backfill

All flowable backfill shall be mix design Type A as described in Section 2600 of the City of Lee’s Summit Design and Construction Manual.

2802.6 Concrete

All concrete for bases and pads, whether reinforced or non-reinforced, shall be a KCMMB 4k psi, or higher, approved concrete mix. Concrete construction shall be in accordance with ACI 301 Standard Specifications for Structural Concrete.

2802.7 Reinforcing Steel for Concrete Bases

All reinforcing steel shall meet the requirements of steel bars for concrete reinforcement. AASHTO specifications, when referenced, will control the physical properties, chemical properties and handling and storage of the material, except as otherwise specified herein or shown on the Plans.

Unless otherwise specified, reinforcement shall be deformed bars in accordance with AASHTO M 31, AASHTO M 42 or AASHTO M 53. Bars in accordance with AASHTO M 42 and M 53 shall be in straight lengths only. Splicing of bars is not allowed.

Upon request, Contractor shall provide documentation of reinforcing steel that shall include the steel manufacturer's certified mill test report showing complete chemical and physical test results for each heat.

2802.8 Anchor Bolts

Anchor bolts shall be steel with 50,000 PSI minimum yield. Anchor bolts shall be threaded for the length of the bolt that is to be exposed. The anchor bolts shall be hot dipped galvanized on the top ten inches (10") of the threaded end, after threading. All accessories shall be galvanized to ASTM A153 standards. Threads shall be Coarse Thread Series as specified in ANSI B1.1 and may be formed by cutting or rolling.

2802.9 Luminaires

The manufacturer, type, and model of luminaires shall be supplied as shown on the Plans, Standard Drawings, or as specified in the Project Special Provisions.

2802.9.1 Cobra Head Luminaires

Cobra Head style luminaires shall be a power door or drop ballast type and be constructed of a single piece die-cast aluminum upper housing and one-piece or two-piece bottom door, hinged at the back and latched on the street side. The luminaire shall be equipped with an integral slipfitter for 2-inch luminaire arm mounting. The mounting device shall allow the luminaire to be mounted absolutely level and shall have no more than four (4) fasteners serving both the leveling and clamping functions. It shall allow one person to install the luminaire by simultaneously holding it in position and tightening the fasteners, such that the luminaire will be properly level at the first attempt. The luminaire shall be equipped with a 'trigger latch' for easy, one-hand, no-tools opening of the fixture for installation and servicing. A factory installed bird guard shall fit snugly around the mounting device. The luminaire shall provide a moisture proof and dust proof chamber and weather protection for the ballast. A removable power-pad/module with quick-connect electrical hookup for easy installation of the electrical system and easy access to the ballast compartment shall be mounted on the door. Top housing mounting or a bridge assembly configuration will not be accepted.

The lens shall be a single piece of optically clear, flat, heat-resistant, impact resistant glass. The sealed optical assembly shall be fully shielded (emitting no direct uplight). The reflector shall be natural unpainted alzak aluminum and shall be secured to the top housing.

The lamp socket shall be preset at the factory to meet the requirements of the IESNA classification for Type III cutoff light distribution at a minimum.

The luminaire shall not be provided with a photocell receptacle unless otherwise noted on the Plans or Project Special Provisions.

Luminaires shall be pre-wired, requiring only connection of service wires to a terminal board. The ballast shall be a regulator type, high power factor, for high-pressure sodium at a voltage of 120/208/240/277 volts. The ballast shall be capable of reliably operating the lamp with a line voltage varying plus or minus 5 percent from normal. The entire ballast, including condensers, shall be mounted on a power door or drop assembly and be easily removable and replaceable with gloved hands and without tools through the use of quick disconnecting mechanical devices and electrical plugs.

2802.9.2 Post-Top Luminaire

The luminaire housing shall be constructed of cast aluminum and shall have a gray appearance. The ballast shall be a regulator type, high power factor, for high-pressure sodium at a voltage of 120/208/240/277 volts. The ballast components shall be housed in a totally enclosed integral compartment, and the optical section of the unit shall be completely sealed and gasketed. The pressed prismatic refractor shall be one piece polycarbonate plastic. The refractor shall be for IESNA Type III distribution, unless otherwise specified on the plans.

2802.10 Lamps

Luminaires shall be equipped with high-pressure sodium (HPS) vapor lamps. Lamp life shall be rated not less than twenty-four thousand (24,000) hours. Burnout at twenty thousand (20,000) hours shall not exceed twenty percent (20%). Rated initial lumen output shall be as follows:

A. 150 watt lamps shall be rated 16,000 lumens.
B. 250 watt lamps shall be rated 30,000 lumens.
C. 400 watt lamps shall be rated 50,000 lumens.

2802.11 Conduit

The location and type of conduit shall be as shown on the Plans or Standard Drawings. The Contractor may furnish and install polyvinyl chloride (PVC), or high-density polyethylene (HDPE) conduit for the distribution system. Galvanized Rigid Steel (GRS) conduit shall be used where conduit is to be installed externally on a structure. For projects where the surface is largely unpaved, it is the Contractor's option to furnish and install cable-in-duct, instead of separate conduit and cables for the distribution system.

2802.11.1 Polyvinyl Chloride (PVC)

Rigid non-metallic conduit shall be polyvinyl chloride (PVC), Schedule 40 or Schedule 80, and shall conform to NEMA Standard TC-2 and NEMA TC-3. The conduit shall bear an Underwriters' Laboratories (U.L.) label and shall conform to Federal Specification WC-1094A (latest version). The conduit shall be clearly and durably marked at least every 10 feet with the material designation, nominal duct size, and the name and/or trademark of the manufacturer. Fittings for PVC conduit shall be in accordance with U.L. 514. Cement used for the fittings shall be in accordance with the conduit manufacturer's recommendations. Conduit, fittings, and cement shall be supplied by the same manufacturer.

2802.11.2 High Density Polyethylene (HDPE)

Flexible non-metallic conduit shall be high-density polyethylene conduit (HDPE). The conduit shall be smooth walled inside and out, and shall be gray in color. The conduit shall be a plastic duct which is intended for underground use and which can be manufactured and coiled or reeled in continuous transportable lengths and uncoiled for further processing and/or installation without adversely affecting its properties of performance. The conduit shall be manufactured to NEMA Standard TC-7 and ASTM D 3035 SDR11 specifications. The conduit shall be clearly and durably marked at least every 10 feet with the material designation, nominal duct size, and the name and/or trademark of the manufacturer. Fittings for HDPE conduit shall be in accordance with ASTM D 2683. Epoxy used for the fittings shall be in accordance with the conduit manufacturer's recommendations.

An approved factory coupling shall be used for connection of the HDPE conduit to a 90° factory PVC elbow or between two lengths of HDPE conduit. The coupling shall be of high density polyethylene material. The coupling shall provide an airtight and watertight lock connection.

2802.11.3 Galvanized Rigid Steel (GRS)

Galvanized rigid steel conduit shall be shall be in accordance with ANSI C80.1. GRS conduit shall be galvanized on both the inside and the outside surfaces. The weight (mass) of zinc coating shall be no less than 0.5 ounce per square foot of coated surface, as determined in accordance with AASHTO T 65. The interior or exterior surface, or both, may be given a coating of suitable material to facilitate installation of wires and cables and to permit the conduit to be readily distinguished from pipe used for purposes other than electrical. All metal conduit ends shall be provided with a bushing to protect the cable from abrasion. Fittings shall be in accordance with ANSI C80.4. A sufficient number of conduit hangers shall be supplied to attach the GRS conduit to the structure, as recommended by the manufacturer. One (1) No. 6 AWG, bare copper ground wire shall be attached to each end of the GRS conduit with a grounding bushing. The ground wire shall be connected to a ground rod at each end of a GRS conduit run, or extended to an adjacent GRS conduit or ground rod.

2802.11.4 Cable-In-Duct

Cable-In-Duct shall consist of three low voltage, insulated power cables, factory installed in conduit intended for direct burial. The duct shall meet all the specifications for high density polyethylene, as described in Section 2802.11.2. The duct shall be clearly and durably marked at least every 10 feet with the material designation, nominal duct size, and the name and/or trademark of the manufacturer. The cables shall meet all the specifications for distribution cable, as described in Section 2802.13.

2802.12 Pull and Junction Boxes

Pull and junction boxes shall be as shown on the Plans and shall be fiberglass reinforced polymer concrete of a size and shape as indicated on the Standard Drawings. Junction boxes may be either Type 1 or 2, and pull boxes shall be Class 1. Pull and junction box material is to be an aggregate consisting of sand and gravel bound together with a polymer and reinforced with continuous woven glass strands. Pull boxes shall withstand a wheel load of 20,000 pounds and junction boxes shall withstand a wheel load of 15,000 pounds. All pull and junction boxes are to have an open bottom.

Each pull or junction box shall be equipped with a bolt down cover. The threaded hole that receives the cover lock-down bolt shall be open at the bottom to allow the cleanout of sand, dirt and other debris. Lock-down bolts shall be stainless steel with a hex-head. Pull and junction box covers shall be polymer concrete and shall have a minimum wheel load rating of 20,000 pounds and 15,000 pounds respectively. A lift opening or pull slot shall be provided on all covers. Covers shall be embossed with "STREET LIGHTING".

2802.13 Cable

The types and lengths of cables shall be supplied as shown on the Plans, Standard Drawings, or as specified in the Project Special Provisions. All cable shall be stranded annealed soft drawn copper wire, and shall be the AWG size as listed on the Plans. Cable shall be 600-volt and be thermoplastic or thermosetting polyethylene insulated. All cable shall be plainly marked on the outside with the manufacturer's name and identification in accordance with industry practice.

2802.13.1 Distribution Cable

Distribution cables shall be insulated three-conductor cables (3c), type RHH, RHW-2 or USE-2, meeting the requirements of ICEA S-95-658. Average thickness of insulation shall be no less than 60 mils. The conductors should be no larger than No. 4 AWG and no smaller than No. 8 AWG.

2802.13.2 Pole and Bracket Cable
Pole wiring above handhole, inside the pole to luminaire(s) shall be insulated two-conductor No. 10 AWG cables (2c #10), type THHN/THWN. For poles with dual luminaires separate cables will be required for each luminaire, which will extend up from the break-away fused connectors.

2802.14 Break-Away Fused and Non-Fused Connectors
Break-away fused connectors shall be in-line waterproof pre-molded fused slip connector assemblies with rubber insulating boots as shown in the Standard Drawings. Fused connectors shall be used for each hot cable, and non-fused connectors shall be used for the ground. Connectors shall have one or two copper set screw type terminals to accommodate the wire sizes indicated in the Plans. Fuses shall be high interrupting 8-Amp fuses.

2802.15 Splices
Splices shall be made in junction boxes with copper type K split bolt connectors. All splices shall be protected with a waterproof resin splice kit installed in accordance with the manufacturer's recommendations.

2802.15.1 Resin Splice Kits
Resin splice kits shall consist of a waterproof protective plastic case designed for the split bolt connector, filled with a resin insulating compound mixed in accordance with the manufacturer's recommendations.

2802.16 Power Supplies
Power supplies shall consist of all equipment and material necessary for the distribution of secondary electrical power as shown on the Plans. Power supplies shall be underground service type, rated for 100 amperes, 240 volts, capable of operating either one or four-circuits.

All power supply assemblies shall be warranted by the manufacturer to be free from defects in workmanship and material for at least one year from the date of project acceptance. Any components found to be defective during the warranty period shall be replaced free of charge. All warranties provided shall be transferred to the City upon project acceptance.

Insofar as practical, major items of electrical equipment supplied under a single contract or tied contracts shall be of the same type and consist of products of the same manufacturer to secure uniformity and satisfactory service.

2802.16.1 Cabinets
Power supply cabinets shall be of the type and size listed in the Plans or Standard Drawings. Cabinets shall be NEMA 3R construction, dust-tight, watertight, corrosion resistant, and constructed of 0.125-inch minimum non-anodized aluminum alloy and be of clean-cut design and appearance. The cabinet shall include individual meter, panel, contactor, and a service pull "compartment". The meter and panel/contactor compartments shall have piano hinged doors. All hinges, catches and other hardware shall be non-ferrous metal or stainless steel. The meter compartment shall include padlocking provisions, and the panel/contactor outer door shall have a factory installed Corbin lock assembly designed for a standard number 2 key. The panel/contactor compartment shall have an inside panel door. The outer and inside panel doors shall be equipped with an approved doorstop. Cabinets shall have a control panel constructed of the same material as the cabinet. All equipment such as photoelectric cells, contactors, relays, terminal blocks, circuit breakers, and lightning arrestors shall be installed on the panel as shown on the Plans. The panelboard shall have silver plated copper buss and shall accept the required number of 1 inch (1”) plug-in breakers. Panelboard compartment shall contain photoelectric cell, and test switch.

All factory installed wire shall be 600 volt rated copper. All terminals shall be approved for copper or aluminum wire. The cabinet shall have a natural aluminum finish.

2802.16.2 Photoelectric Cells

Photoelectric cells shall be of the solid-state type operating on 240 volts, and shall operate on a line supply of 50 to 60 hertz. The load capacity of the photoelectric cell relays shall be a minimum of 1000 watts. Photoelectric cells shall operate a lighting system through mercury load relays. The photoelectric cell circuitry shall be designed to be normally closed at night. The photoelectric cell shall be configured such that in the event of failure, the lights shall be on. The photoelectric cell shall be mounted inside the power supply cabinet such that all luminaires within the system operate simultaneously and shall illuminate only during hours of darkness or low visibility. Turn-on shall occur at 2.6 footcandles ± 0.5 footcandles. The photoelectric cell shall have an inverse off/on ratio for energy savings. Photoelectric cells shall sense light levels with a non-drifting phototransistor. The photoelectric cell shall have a time delay to avoid turn off due to lightning and transient light. A suitable bracket for mounting the photoelectric cell shall be provided. The photoelectric cell shall be mounted into a three-prong twist lock socket, on the side of the cabinet. Test switches used with photoelectric controls shall be three-position switches as shown on the Plans. Test switches shall be clearly labeled and mounted in the cabinet.

2802.16.3 Contactors, Relays, and Terminal Blocks

Contactors, relays and terminal blocks shall be housed in the cabinet and shall be of the type shown in the Standard Drawings. The components shall be sized for each lighting circuit as shown on the Plans. Contactors shall not be electrically or mechanically held, nor shall they include any fusing.

2802.16.4 Circuit Breakers

All circuit breakers shall be molded-case thermal-magnetic Type B plug- on circuit breakers. The number and trip rating of circuit breakers shall be as shown on the Plans. All breakers shall be designed for panel mounting with cable connections on the line and load sides. Type B circuit breakers shall have a minimum of 10,000 amps alternating current interrupting rating at 240 volts alternating current. Type B circuit breakers shall have a nominal size no greater than one inch (1”) wide by four inches (4”) high by three inches (3”) deep. Terminals shall be configured for the wire sizes as shown on the Plans. If the breaker terminals are not designed for the required wire sizes, suitable terminal adapters, connectors or terminal blocks shall be used to convert the wire sizes.

2802.16.5 Lightning Arrestors

Lightning arrestors shall be rated at 650 volts alternating current.

2802.17 Spare Equipment

If spare equipment is included in the contract, such equipment shall conform to these Specifications. The items shall be delivered new and undamaged at the place and time specified by the City Engineer. All existing equipment in excess of the requirements of this project shall be completely removed from the project site by the Contractor and delivered at the place and time specified by the City Engineer.

2803 CONSTRUCTION REQUIREMENTS

2803.1 Scope

This section governs the construction of all bases and the installation of all luminaires, poles, conduits, cables and other material and equipment as required to complete the street lighting

system as shown on the Plans, the Standard Drawings, and as specified in the Project Special Provisions.

2803.2 Screw-in Anchor Base Installation

The Contractor is responsible for verifying the correct line and grade of all screw-in anchor bases prior to installation. The Contractor shall stake the location of all street lighting poles to be installed. The City Inspector shall inspect the staking prior to any excavation and/or construction. Minor relocation of equipment to avoid conflicts may be allowed with the approval of the City Engineer.

Screw-in anchors shall be of the size and type required for the pole. If rock is encountered, the screw-in anchor may be installed in a pre-drilled hole and backfilled with concrete, in accordance with Section 2802.6, or Type B flowable backfill in accordance with Section 2600 of the City of Lee's Summit, Missouri Design and Construction Manual.

The base shall be screwed straight into the ground and the steel base plate shall be at the proper elevation and properly oriented to receive the shoe base. During installation the anchor shall be plumbed with a level. The base plate shall be flush with the finished grade. Minor leveling adjustments may be made with the use of leveling shims or washers. Shims and washers shall be galvanized or cadmium-plated steel no more than one-quarter inch (0.25") thick. Only one shim or washer will be allowed at any one anchor bolt. The installing torque for screw anchor bases shall be between the maximum and minimum torque ratings shown on the Standard Drawings or per the manufacturer's recommendations.

Conduit bends shall be installed into all screw-in anchors through the slots in the base of the anchors. After conduit bends are installed and capped, the internal cavity of the screw in anchor shall be backfilled with sand or other fine aggregate material, as approved by the City Engineer.

2803.3 Concrete Base Installation

The Contractor is responsible for verifying the correct line and grade of all concrete bases prior to installation. The Contractor shall stake the location of all street lighting poles and power supplies to be installed. The City Inspector shall inspect the staking prior to any excavation and/or construction. Minor relocation of equipment to avoid conflicts may be allowed with the approval of the City Engineer.

All concrete bases shall be of the size and type show in the Standard Drawings, including all reinforcing steel.

Reinforcing steel for concrete bases shall be accurately cut and bent to the dimensions and shapes shown on the Plans. Cutting and bending tolerances for reinforcing steel shall be in accordance with the Concrete Reinforcing Steel Institute's *Manual of Standard Practice*. Flame-cutting of uncoated reinforcing steel may be permitted. Reinforcing steel shall be protected from damage at all times. When placed in the work and before concrete is placed, reinforcing steel shall be free from dirt, oil, paint, grease, loose mill scale, thick rust, any dried mortar and other foreign substances. A thin layer of powdery rust may remain. Reinforcing bars shall be positively secured against displacement. The bars shall be firmly tied at alternate crossings or closer. The steel shall be spot welded or tied in the correct position with proper clearance maintained between the forms and the reinforcement. The Contractor shall construct the unit as shown on the Plans. Measurements to reinforcing steel will be made to the centerline of bar, except where the clear distance from face of concrete is shown on the Plans. Splicing of bars shall not be allowed.

PVC conduits and conduit bends should be set in the forms for concrete bases. Pole and power supply bases shall have separate conduits for exiting/entering cables and a separate one inch (1") conduit for the ground wire. The direction of the exiting conduits and the orientation of the power supply shall be as shown in the Plans. Conduit set in concrete bases shall extend approximately three inches (3") above the base vertically and a minimum of three inches (3") outside the base horizontally underground.

The bottom of all concrete bases shall rest on firm ground. Forms shall be true to line and grade. The top of the base for street light poles, except raised bases, shall be finished to curb or sidewalk grade, or as directed by the City Engineer. Forms shall be rigid and securely braced in place. Conduits and anchor bolts shall be placed in proper position, to proper heights, and held in place by means of a template until the concrete sets. Conduits shall be covered before concrete is poured to prevent concrete from entering the conduits. All portions of the anchor bolts extending above the base shall be threaded. Anchor bolts shall align with the bolt holes on the shoe base. Anchor bolts shall be provided with two (2) hex head nuts, flat washer, and lock washer. One nut shall be installed on each anchor bolt to be embedded in the concrete base, to within 1/8" above flush with the top of the base. Both forms and ground which will contact the concrete shall be thoroughly moistened before placing concrete.

Pole base and power supply bases shall be poured monolithic. Bases shall be consolidated by an internal type vibrator. The vibrator shall operate at frequencies of vibration not less than 5,000 cycles per minute under load. The amplitude of vibration shall be adequate to consolidate concrete properly. The concrete shall be cured with an approved moisture barrier such as wet burlap, polyethylene, etc., for a period of seventy-two (72) hours. Cold weather curing shall be such that the concrete temperature shall be maintained above freezing for the entire curing period. Forms shall not be removed until the concrete is thoroughly set. The exposed portions of the base shall be finished to present a neat appearance. Finishing should be done with the positioning jig in place. If the jig must be removed for finishing, it shall be re-installed immediately after finishing and left in place throughout the cure period. A safety device (traffic cone, Type I barricade, etc.) shall be installed over each pole base immediately after finishing and remain in place until the pole is installed. Prior to installing the pole, the positioning jig shall be removed and loose concrete cleaned from around the anchor bolts and conduits.

Cinders, broken concrete, broken rock or other hard or undesirable material shall not be used for backfilling around the finished base. The backfill material shall be placed in layers not to exceed six inches (6") deep, and each layer shall be thoroughly compacted to the approximate density of the adjacent material before the next layer is placed.

2803.4 Conduit Installation

Conduit shall be installed as shown in the Plans and the Standard Drawings. The size of the conduit used shall be as shown on the Plans. It shall be the privilege of the Contractor, at his own expense, to use larger size conduit if desired, as approved by the City Engineer. Where larger size conduit is used, it shall be for the entire length of the run from outlet to outlet. No reducing couplings will be permitted. No additional payment will be made for larger conduit.

Wherever a conduit passes beneath a curbed street, aluminum conduit markers shall be installed in the curb immediately over the conduit location. Conduit markers shall be furnished by the Contractor as detailed in the Standard Drawings and shall be installed in the top of the curb by drilling the curb and epoxying the conduit marker in place. Conduit markers are subsidiary to the installation of conduit.

The ends of all conduits shall be well-reamed to remove burrs and rough edges. All conduits shall be cleaned and swabbed prior to installation of cable. Field cuts shall be made square and true so that the ends will butt or come together for the full diameter thereof. The end of each conduit run shall be covered to prevent water or debris from entering the conduit while the system is being constructed.

Existing underground conduit to be incorporated into a new system and GRS conduits shall be cleaned with a mandrel and blown out with compressed air.

An approved factory coupling shall be used for connection of the HDPE conduit to a 90° factory PVC elbow or between two lengths of HDPE conduit.

Conduit bends, except factory bends, shall have a radius of not less than six times the inside diameter of the conduit. Where factory bends are not used, conduit bends shall be made without crimping or flattening, using the longest radius practicable and utilizing an appropriate conduit bending tool.

The conduit shall be installed continuous from outlet to outlet or as otherwise shown on the Plans. With respect to HDPE conduit, no couplings or joints will be allowed at intermediate points unless approved by the City Engineer. The conduit may be directional bored to minimize disruption to the existing improvements or may be plowed or trenched. Conduit shall be installed under pavement sections at a depth not less than 24 inches (24”); and where laid in trenches in unpaved areas, conduit shall be laid to a depth of 24 to 36 inches (24” to 36”) below natural ground level or finish grade.

At all outlets, conduit shall enter from the direction of the run. PVC conduit bends shall enter all junction or pull boxes from below the box and shall extend into the box a minimum of 4 inches (4”) as shown on the Plans. GRS conduits may enter a pull or junction box from the side. The side of the box shall be drilled per the manufacturer’s recommendations. The hole shall be no more than one-half inch (½”) larger than the conduit. The gap between the box and conduit shall be filled with sealing compound.

2803.4.1 External Conduit on Structure

GRS conduit shall be used when conduit is to be installed externally on structures. Conduit on structures will include conduit on bridges, retaining walls or other structures, and shall be installed as shown on the Plans or as directed by the City Engineer. The final location of all conduit and junction boxes shall be approved by the City Engineer before installation begins. Conduit shall not be attached to prestressed concrete girders or prestressed, precast concrete deck panels. The conduit shall be secured to the concrete with clamps at no more than 5-foot intervals. Concrete anchors shall be in accordance with federal specification FF-S-325, Group II, Type 4, Class I, and shall be galvanized in accordance with ASTM A 153, B 695-91 Class 50, or constructed of stainless steel. The minimum embedment in concrete shall be 1 3/4 inches. If it is necessary to anchor the conduit to steel bridge members, the attachment method shall not involve drilling, grinding or welding. Attachment method to steel members shall be approved by the City Engineer. Expansion fittings shall be installed at each end of a bridge and each location where the conduit crosses a bridge expansion joint. The expansion fitting shall provide a minimum movement in either direction as shown on the Plans or as specified by the City Engineer. Clamps, concrete anchors, expansion fittings, and any hardware or material required for conduit installation on structures shall be at the Contractor’s expense.

2803.4.2 Trenching

Trenches shall be excavated to a maximum width of six inches (6”) and deep enough to provide the minimum cover for conduits as shown in the Standard Drawings. Trenches leading to screw-in anchor bases shall not be wider than the shaft of the anchor. Conduit shall be allowed to "snake" in the trench, but there shall be no sharp bends and if two or more conduits are placed in a common trench, the conduits shall not cross each other. If the bottom of the trench is in rock or rocky soil, the conduit shall be placed on a six inch (6") protective layer of clean, tamped backfill material. Trenches shall be backfilled as soon as practical after the installation of conduit, but after inspection of the trench by the City Engineer or designee. Backfill material installed within six inches (6”) of the conduit shall be free of rock or other solid material that might cause mechanical damage to conduit. The backfill material shall be placed in layers not to exceed 6 inches (6”) deep, and each layer shall be thoroughly compacted to the approximate density of the adjacent material before the next layer is placed. Red burial tape imprinted with "CAUTION - BURIED CABLE BELOW" shall be installed in all trenches at approximately 1/3 to 1/2 of the depth of the trench. The four to six inches (4” to 6”) of backfill material directly below finished grade shall be topsoil. All disturbed areas shall be restored to the satisfaction of the City Inspector.

2803.4.3 Plowing

Conduit may be installed by plowing in unpaved areas. The equipment used for plowing conduit is designed specifically for that purpose with the power and versatility to easily and accurately bury the various sizes of conduit under all normal soil conditions. This equipment places the conduit without twisting, kinking, or damaging the material in any way. The vibrating unit shall be attached to a tractor unit in such a manner that the tractor does not dampen the vibration. The cable way and guides shall be smooth, free of obstructions and sharp edges and shall not cause bending of the conduit at shorter than the minimum bending radius recommended by the manufacturer, nor cause excessive strain to the conduit. Conduit reels may be mounted on the tractor or conduit unreeled along the proposed route before plowing in such a manner to allow as direct a line as possible to the trench to avoid unnecessary bending of the conduit or rubbing of the conduit against the reel. The plow shall not be backed onto the conduit. If an underground obstruction is encountered, the plow shall be lifted out of the ground and the obstruction removed. Conduit may be installed utilizing the pull plow method if approved by the City Engineer. After installation of conduit by plowing, the disturbed earth shall be leveled and, if necessary, compacted by a device approved by the City Engineer. Ends of conduit shall be capped immediately after cutting to prevent moisture and debris from entering the conduit. Red burial tape imprinted with "CAUTION - BURIED CABLE BELOW" shall be installed in all trenches at approximately 1/3 to 1/2 of the depth of the trench. All disturbed areas shall be restored to the satisfaction of the City Inspector.

2803.4.4 Boring

Pavement shall not be disturbed without the written permission of the City Engineer and then only in the event insurmountable obstructions are encountered. Conduit shall be placed under existing pavement by boring. The Contractor shall complete the boring as to maintain minimum permissible clear distances, both horizontally and vertically, from all underground utilities. Boring pits shall be kept two feet (2’) clear of the edge of any type of pavement wherever possible. Boring alignment shall be perpendicular to the curb line in order to achieve the shortest possible crossing distance. Excessive use of water such that pavement might be undermined or subgrade softened, will not be permitted. The Contractor shall at all times and for the entire length of the boring alignment be able to demonstrate the horizontal and vertical position of the alignment. All disturbed areas shall be restored to the satisfaction of the City Inspector. Boring may be used instead of trenching at all other locations.

2803.5 Pull and Junction Box Installation
Pull and junction boxes shall be installed as shown on the Plans, Standard Drawings, or as directed by the City Engineer.

The top surface of all pull or junction boxes shall be flush with surfaced areas and approximately one inch above earth or sodded areas. All boxes shall have one-half inch (½") clean crushed aggregate or other porous material for a minimum depth of twelve inches (12") below the box for drainage. The excavated opening outside the junction box shall be wide enough to allow compaction of the backfill material. Cinders, broken concrete, broken rock or other hard or undesirable material shall not be used for backfilling. The backfill material shall be placed in layers not to exceed six inches (6") deep, and each layer shall be thoroughly compacted before the next layer is placed. All disturbed areas shall be restored to the satisfaction of the City Inspector.

A pull or junction box placed in an unpaved area shall have a concrete pad around the perimeter as shown on the Plans. Concrete for the pad shall be per Section 2802.6. The concrete shall be reinforced with welded wire fabric. Concrete pads will not be required for boxes installed in concrete. Pull or junction boxes shall not be installed in sidewalk ramps.

Each Class 1 Pull Box shall be equipped with cable hooks as shown on the Plans. Cable hooks shall be galvanized steel or brass with a minimum diameter of 3/8 inch and a minimum length of five inches (5").

Additional pull or junction boxes may be installed when approved by the City Engineer. If it becomes necessary to increase the excavation depth and extend the box, no direct payment will be made.

2803.6 Power Supply Installation
The power supply, including the cabinet, photoelectric cell, contactors, circuit breakers, lightning arrestor, and any other required materials or equipment shall be constructed and installed as shown on the Plans or as directed by the City Engineer. The Contractor shall coordinate his activities with the electrical utility company to insure delivery of power to the power supply when and where required. The cabinet shall be cleaned of wrapping, shipping material, dirt, grease, etc. Scratches, abrasions or other surface damage shall be repaired to like new condition. The photoelectric cell shall be oriented to the North or to the East.

2803.7 Circuit Wiring
Installation of wiring shall be in accordance with the Plans and Specifications and appropriate articles of the NEC.

Distribution cables shall be continuous and unspliced from the control panel to the first light pole. Cable shall be pulled with minimal dragging on the ground or pavement. Frame mounted pulleys or other suitable devices shall be used for pulling cables out of conduits into pull boxes. Powdered soapstone, talc or other approved lubricant shall be used to facilitate pulling cable in conduits. All cable to be installed in one conduit shall be pulled by the Contractor in one operation, and all ends shall be taped to exclude moisture and shall be so kept until the splices are made or terminal appliances attached. Ends of spare conductors shall be taped. Tape shall be Scotch (3M) No. 33+ "Electrical Tape" or approved equivalent. After cables are installed all conduit ends shall be sealed around the cables with a readily workable, soft, sealing compound. The compound shall be workable at 30° F and shall not melt or run at temperatures up to 175° F.

Underground cable splices shall be made in a pull or junction box. Splices in the distribution cable will only be permitted where circuits branch or tee. Tee splices shall be made with split bolt connectors or an approved equivalent. All splices shall be protected with a waterproof resin splice kit installed in accordance with the manufacturer's recommendations. All cables passing through a pull or junction box shall be coiled once around the inside of the box to allow for splicing and connecting wires in the future. Wiring within power supplies and boxes shall be neatly arranged and laced up.

All circuits shall be properly labeled in all power supplies and boxes by means of round brass or aluminum identification tags with a minimum thickness of 0.1 mil attached to the cables with copper wire. The ends of the copper wire should be wrapped with electrical tape. Circuits shall be labeled with the power supply ID number and the circuit number.

2803.8 Cable-In-Duct Installation

All applicable portions of the conduit installation and circuit wiring sections apply to cable-in-duct installation. Cable-in-duct may be installed by boring, trenching, or plowing operations. Cable-in-duct runs shall be continuous without splice between the control panel, pole bases, and junction or pull boxes. Cable-in-duct shall extend far enough to provide the required amount of cable slack at all terminations or connections. For concrete bases, rigid conduit of sufficient size to facilitate the pulling of cable-in-duct shall be cast in the base as shown on the Plans. The cable-in-duct shall be installed through the rigid conduit in the base. The plastic duct of the cable-in-duct is to be terminated six inches (6”) above the bottom of junction or pull boxes and bases, leaving the cables exposed for connection. All terminations of this plastic duct are beveled free from any sharp edges or burrs. The insulation of the electrical conductor may not be damaged when cutting the duct.

2803.9 Street Light Pole Installation

Street light poles and luminaires shall be installed as shown on the Plans and Standard Drawings, and as specified in the Project Special Provisions or as directed by the City Engineer. Street light poles are to be kept dry and out of the weather until time for erection. The manufacturer’s protective paper wrapper may be removed for inspection upon receipt from the manufacturer. Poles and luminaires shall be cleaned of dirt, grease, etc. Scratches, abrasions or other surface damage shall be repaired to like new condition.

Street light poles shall be fastened to screw-in anchor bases or concrete with a break-away base using galvanized hardware, except the 14-foot pole which does not require a break-away base. The pole shall be checked for plumb, minor corrections made using galvanized or cadmium plated steel shim stock, the nuts tightened, and the removable bolt covers installed. Hand holes in the pole and break-away base shall be oriented so that they are 180° from the direction of oncoming traffic. In a median, the hand holes should be oriented 180° from one direction of oncoming traffic, facing either North or East, for all poles installed in medians. The opening in the breakaway base should be located on the same side of the pole as the hand hole.

2803.9.1 Bracket Arm Installation

Bracket arms for luminaires shall project from the street side of the pole and be perpendicular to the roadway. Install a one inch (1”) rubber grommet around the hole at the top of the light pole for the cable entrance. Sufficient lengths of pole and bracket cable shall be run inside the length of the street light pole shaft, out through the grommet at the top of the pole, and through the bracket arm. The bracket arm is to be attached to the pole with clamp-on style supports using stainless steel hardware. Cables shall not be pinched when bracket arms are attached to poles.

For poles with dual luminaires, different color pole and bracket cables shall be run to each luminaire to indicate the directional orientation of each luminaire. When looking at the hand hole, red cables shall be run to the luminaire on the right-hand side of the pole, and black cables shall be run to the luminaire on the left-hand side of the pole.

2803.9.2 Cover Skirt

An aluminum cover skirt must be installed around all four (4) sides of the base plate of screw-in anchor bases if a gap of more than one inch (1”) is visible between the bottom face of the base plate and the finished grade. The cover skirt is to be made of two solid sheets of aluminum, alloy designation 3003-H14, which are field cut and shaped to fit flush against the base plate and extend down to the finished grade. The aluminum sheets should overlap each other, and be fastened together with stainless steel self taping screws.

2803.9.3 Luminaire Installation and Adjustment

Cobra head luminaires shall be installed on the slipfitter at the end of the bracket arm. To give proper illumination on the roadway, the frontal view of the luminaire should be parallel to the grade of the road surface, while in the side view the luminaire should be horizontal. Post-top luminaires not equipped with terminal blocks shall be connected to the pole wiring with approved butt connectors.

2803.9.4 Lamp Installation

The installation date shall be marked on the base of the lamp prior to installing it in the luminaire housing.

2803.10 Electrical Connections

Each distribution cable shall be connected to the corresponding pole and bracket cable in each pole base using a fused or non-fused break-away connector as shown on the Plans.

Two (2) fused connectors should be used for the hot leads, and one (1) non-fused connector should be used for the ground. Each break-away connector should allow two (2) cables to be attached to the terminal on the line side. The load side of the fused connectors should allow one (1) cable to attach to the terminal for single luminaires and two cables (2) for dual luminaires on a single pole. Two (2) pole and bracket cables are to be run from the load side of the fused connectors to each luminaire on the pole. One (1) pole and bracket cable is also to be run from the load side of the non-fused connector to the grounding lug on the street light pole. The connectors shall be installed convenient to the hand hole in the street light pole.

One foot of surplus cable shall be coiled at the line side of each connector and on the load side of each connector. Connectors shall be installed with the fuse or ground slug attached to the load side of the connector. From the load side of the non-fused connector, the ground wire shall be fastened to the factory installed ground lug in the base of the light pole by a 3/8" ring terminal and 3/8" - 16 x 3/4" long hex bolt.

2803.11 Grounding

At each concrete base a ground rod shall be driven in the trench adjacent to the base. This shall also include screw-in anchor bases backfilled with concrete or flowable backfill.

At each power supply base a ground rod shall be driven in the same trench as the 3” conduit for the secondary service connection. The completed ground rod installation and connection to the ground wire shall not be backfilled until it the power supply passes inspection by the City’s

Codes Administration Department. The grounding clamp connection and the listing mark on the rod must be visible for inspection.

The ground rod shall be copper coated to meet NEC requirements, not less than one-half inch (½") in diameter, and ten feet (10') in length. Ground rods shall be driven to a minimum depth of twelve inches (12") below the finished surface. If subsurface conditions exist which prohibit the placement of the ground rod in a vertical position, the rod may be driven at an oblique angle, not to exceed 45-degrees from vertical, or when authorized by the City Engineer, buried in a trench at least thirty inches (30") deep. The driven ground rod shall be connected to the grounding lug by a No. 6 AWG copper wire attached to the rod with a galvanized grounding clamp. The ground wire is to be run through a one inch (1") diameter conduit in the base.

2803.12 System Testing

The Contractor is responsible for testing the completed street lighting system. Prior to acceptance by the City, the Contractor shall notify the City Engineer for an inspection as soon as the system(s) is (are) ready.

After a power supply is energized, the resistance to ground shall be tested. The Contractor shall provide a suitable measuring device capable of measuring ground resistance from 0 to 1,200 ohms for the resistance test. The resistance test shall be performed by the Contractor in the presence of and documented by the City Engineer. The ground rod shall have a resistance to ground of 25 ohms or less. If the resistance is more than 25 ohms, the Contractor shall install additional ground rods which are bonded to the first ground rod, until the required resistance is achieved. No payments will be made for additional ground rods.

2803.12.1 Burn Test

All street lighting system elements shall function properly as a complete system for a minimum period of fifteen (15) days before acceptance by the City. The fifteen (15) day period shall be cyclical and initiated by the City Engineer. Any malfunction observed or recorded shall stop the test period for the entire system as of the time of the malfunction. A period shall start when the malfunction has been repaired to the satisfaction of the City Engineer. After the burn test is completed, the street light system(s) must remain in operation if the street is open to vehicle traffic.

2803.13 Maintenance Information

Before acceptance of the work, the Contractor shall furnish the City Engineer four copies of the manufacturers' written instructions for maintenance and operation of all lighting equipment and wiring diagrams of the installation or system. At a minimum, the manufacturer's instructions shall include documented, organized instructions, wiring and component layout diagrams, and parts lists with part numbers.

2803.14 As-Built Plans

Prior to acceptance of the work, the Contractor shall submit marked-up or corrected plans showing in detail all construction changes, especially the location and depth of conduit. The Designer will produce as-built plans from the Contractor's marked-up plans.

2803.15 Final Clean Up

Before final acceptance, the Contractor shall restore to a condition equal to or better than that existing prior to construction, for all property, both public and private, within, adjacent to and beyond the limits of construction that have been disturbed or damaged while executing the work. This includes, but not limited to, existing curb and gutter, sidewalk, pavement, drainage

structures, irrigation systems, street lighting and traffic signal equipment. All unpaved areas damaged during construction shall be restored to the original condition. Unless otherwise directed, grassy areas which were originally sodded shall be re-sodded. Restoration work shall be at the Contractor's expense. All restoration work shall be acceptable to the Inspector.

2804 MEASUREMENT AND PAYMENT

See Division I – General Requirements for CIP, Section 01120.

SECTION 2900 – TRAFFIC SIGNALS

CITY OF LEES SUMMIT, MISSOURI
STANDARD SPECIFICATIONS

TABLE OF CONTENTS

2901 General 2
2902 Temporary Traffic Signals 3
2903 Span Wire Assemblies 3
2904 Power Supplies 4
2905 Electric Substation, Service and Span Wire Assembly Poles 4
2906 Material 5
2907 Signal Heads 8
2908 Signs 10
2909 Poles and Mast Arms 10
2910 Traffic Signal/Intersection Lighting 13
2911 Traffic Signal Controller Assemblies 13
2912 Detectors 22
2913 Emergency Preemption 27
2914 Pull and Junction Boxes 28
2915 Concrete Bases 29
2916 Conduit Systems 30
2917 Pole Erection 33
2918 Wiring 33
2919 Test Equipment 36
2920 Test Period 36
2921 Maintenance Information 37
2922 Final Clean Up 37
2923 Measurement and Payment 38

2901 General: This work shall consist of furnishing and installing traffic signal equipment and materials as shown on the plans. All work and material shall be in accordance with the latest requirements of the National Electrical Code (NEC), National Electrical Safety Code (NESC), Standards of the American Society of Testing Materials (ASTM), American Standards Associations (ASA), National Electrical Manufacturers Association (NEMA), Manual on Uniform Traffic Control Devices (MUTCD), and local ordinances.

2901.1 These Specifications may be modified or deleted by appropriate items in the Project Special Provisions or by written authorization by the City Engineer.

2901.2 Work incidental to traffic signal installation that is not covered in these Specifications shall be performed in accordance with the City of Lee's Summit specifications and standards. All incidental parts, which are not shown on the Plans or specified in the Specifications and which are necessary to complete the traffic signal installation, shall be supplied and installed by the Contractor to the satisfaction of the City Engineer. No additional payments will be made for incidental work or parts. All systems shall be complete and in operation to the satisfaction of the City Traffic Engineer at the time of acceptance.

2901.3 All appurtenances shall be installed as shown on the Plans, or as specified in the Project Special Provisions. Any deviations must be established by the Contractor and authorized by the City Traffic Engineer.

2901.4 The Contractor shall contact the Public Works Department before any project work begins to notify the City Engineer of the construction schedule and to request project inspections. The Contractor is responsible for obtaining all necessary permits from the City, and is responsible for all associated costs, before any work can begin.

2901.4.1 The Contractor is responsible for obtaining the owner's building permit from the City's Codes Administration Department before electrical service can be delivered to a power supply. The Contractor shall contact the City's Codes Administration Division for an electrical inspection when a power supply is ready for operation. The City Inspector will obtain an address for the power supply, which the Contractor shall use when dealing with the electrical utility company.

2901.4.2 The Contractor is responsible for contacting the electrical utility company in advance to schedule the installation of the power cables to the power supply. The City shall pay the electrical utility company's fees to deliver electrical service. The Contractor shall be billed for all electrical utility service charges until the test period is successfully completed, at which time service can be transferred to the City.

2901.5 Existing traffic signals shall be maintained in effective operation by the Contractor, except for shutdowns approved by the City Traffic Engineer for alterations or final removal. After any modifications have been made or after work is begun on an existing signal installation, the Contractor shall maintain the signals in accordance with Section 2920. The Contractor shall notify the City of Lee's Summit at least two days, excluding weekends and city holidays, prior to operational shutdown of any traffic signal, and or prior to disconnecting existing vehicle or pedestrian detection. All traffic signal equipment that the Contractor uses or installs on the project, whether furnished by the City or the Contractor, either on a temporary or permanent basis, shall, upon installation or upon initial use by the Contractor, be operated and maintained by the Contractor until the project is complete and accepted. Any malfunction of an existing signal installation resulting from the Contractor's operation, regardless of the nature of the work, shall be corrected at the Contractor's expense in accordance with Section 2920. Signal timing will be

provided by the City Traffic Engineer. Programming of the controller will be the responsibility of the City, except when waived by the City Traffic Engineer. If any adjustments are required to the operation of an existing signal installation due to the Contractor's operation, the Contractor shall provide a minimum of two working days notice to the City Traffic Engineer.

2902 Temporary Traffic Signals: Installation of temporary traffic signals shall consist of furnishing and installing poles for span wire signals, span and tether wires, control and power cable, power supply and connection to a power source, the controller, signal heads, detectors, luminaires, and all mounting hardware, unless specified otherwise. Maintenance of the installation and all other equipment and material necessary to provide the temporary installation will be the responsibility of the Contractor. If the temporary traffic signal installation is not shown on the plans, the Contractor shall submit a plan to the City Traffic Engineer for approval prior to the installation of temporary signals. Any existing or City furnished signal equipment to be used in the temporary signal shall be shown on the temporary signal plan. Temporary signals shall have the signal heads covered until placed in operation. A minimum of two signal faces, in accordance with the MUTCD, shall be oriented toward each street approach positioned a minimum of 8 feet apart, center to center, and a minimum of 16 feet above the surface of the traveled way to the bottom of the signal head assembly including backplate. Existing signals shall not be taken out of operation until the temporary signals are ready for operation and approved by the City Traffic Engineer. A flashing operation shall be used during shutdown of the temporary signals.

2902.1 All temporary signal equipment shall be removed by the Contractor after the new installation is in operation, or as directed by the City Traffic Engineer. Contractor furnished equipment that will become the property of the City shall be of new stock and shall meet all applicable specifications. Contractor furnished equipment that will remain the property of the Contractor may be new or used. City owned equipment will remain the property of the City, unless specified otherwise, and shall be disposed of as shown on the plans or as directed by the City Traffic Engineer.

2902.2 The Contractor shall pay all electrical costs incurred by operation of the temporary signals. For temporary signal installations where an existing signal power supply is not available, the Contractor shall make any necessary arrangements to provide power to the temporary signals. Portable generators shall not be used to provide power to temporary signals. No direct payment will be made for power costs. All wire and cable for temporary signals shall be suspended overhead with proper clearance or buried a minimum of 18 inches underground.

2902.3 Temporary signal installations shall be installed to meet the construction schedule. The Contractor shall provide a minimum of two working days notice to the City Traffic Engineer prior to the signal turn-on. The Contractor shall maintain the signals in proper operating condition, in accordance with Section 2920. Any damage to the traffic signal installation from any cause whatsoever shall be repaired by the Contractor at the Contractor's expense.

2903 Span Wire Assemblies: Span wire assemblies shall include 3/8-inch steel messenger wire, 1/4-inch tether wire, guy wire, all bolts, nuts, washers, clamps, cable straps, and other appurtenances shown on the plans or necessary for proper installation. Messenger wire shall be Class A galvanized, high-strength grade, seven-wire strand in accordance with ASTM A 475. Tether wire shall be seven-wire high-strength steel cable. Splicing of messenger and tether wires will not be permitted. Clamps shall be fabricated from low alloy steel. Steel poles for span wire assemblies shall have wire inlets and cable guides with 1-1/2 inch watertight insulator bushings and other features specified in the contract, and shall be in accordance with Section 2909. Wood

poles shall be in accordance with Section 2905. Wood poles and steel poles for span wire assemblies shall be as specified in the contract and as shown on the plans. Luminaire bracket arms, if specified, will be at the Contractor's expense. Conduit, junction boxes, service entrance caps, attachment hardware or other appurtenances on the wood poles or steel poles as shown on the plans will be at the Contractor's expense.

2904 Power Supplies: Power supplies shall conform to the requirements of Section 2800 of the City of Lee's Summit Design and Construction Manual.

2904.1 For temporary traffic signals, the configuration and installation of equipment mounted on substation and service poles shall be in accordance with the requirements of the utility company furnishing electrical power.

2905 Electric Substation, Service and Span Wire Assembly Poles:

2905.1 Electric Substation and Services Poles**:** Electric substation and service poles shall be of the length and class specified in the contract documents, and shall be in accordance with ANSI 05.1. Poles shall be of the species Southern Pine and have either a 0.38 (pounds per cubic foot of wood) minimum retention of Pentachlorophenol preservation or 0.60 (pounds per cubic foot of wood) minimum retention of ACA or CCA preservation treated in accordance with AWPA C4 Specification. Poles may be gained and drilled in the field after treatment. Areas exposed shall be treated in accordance with Section 2905.5 before cross-arms or equipment are mounted.

2905.2 Span Wire Assembly Poles: Span wire assembly poles shall be of the length specified in the contract and shall be in accordance with ANSI 05.1, Class IV, unless otherwise specified. The poles shall be of the species Southern Pine and have either a 0.38 (pounds per cubic foot of wood) minimum retention of Pentachlorophenol preservation or 0.60 (pounds per cubic foot of wood) minimum retention of ACA or CCA preservation treated in accordance with AWPA C4 Specification. All poles shall have a minimum diameter of 6 3/4 inches, measured at the top of the pole.

2905.3 Pole Crossarms: The species, grade and treatment of crossarms to be erected on substation and service poles will be shown on the plans.

2905.4 Timber Preservatives:

2905.4.1 Pentachlorophenol: Pentachlorophenol shall be in accordance with AWPA P8 in a hydrocarbon solvent meeting the requirements of AWPA P9, Type A.

2905.4.2 Ammoniacal Copper Arsenate (ACA) or Chromated Copper Arsenate (CCA): Ammoniacal Copper Arsenate and Chromated Copper Arsenate shall be in accordance with AWPA P5.

2905.4.3 Copper Naphthenate For Repair: Copper Naphthenate shall be prepared with a solvent in accordance with AWPA Standard P9. The preservative concentration shall contain a minimum of 2 percent copper metal.

2905.4.4 Responsibility for Quality: The Contractor shall use preservatives that meet these specifications or the treated material will be subject to rejection, or to approved retreatment with an approved preservative.

2905.4.5 Final Steaming: All substation, service and span wire poles; except material treated with ACA or CCA, shall be cleaned by a final steam bath in accordance with AWPA C2, C4 or C5, as applicable. In lieu of steam cleaning, sign poles may be strip stacked and air-dried for a minimum of 60 days after treatment.

2905.5 Care After Treatment: Care shall be taken in handling pressure-treated material to avoid damage. Cant hooks, peavies, pickaroons and end cant hooks shall not be used on the side surfaces of treated material. All handling of treated round stock with pointed tools shall be confined to the ends. If damaged material is permitted for use by the City Engineer, or framing at site is required, such injuries, cuts or holes shall be liberally field-treated with the preservative of the same type used for the original treatment, or of copper napthenate. A second coat shall not be applied until after the first coat has been absorbed. Holes shall be treated by plugging one end and filling with preservative.

2905.6 Inspection Requirements:

2905.6.1 Inspection: All material shall be inspected for compliance with these specifications in accordance with AWPA Standard M2.

2905.6.1.1 Timber products treated within the State of Missouri or within 100 air miles of the border may be inspected by City personnel.

2905.6.1.2 The inspection of poles shall be performed by the supplier or an approved inspection agency, and the cost for inspection shall be at the Contractor's expense.

2905.6.2 Inspection Agency: An approved inspection agency will be a laboratory, accredited by the American Lumber Standards Committee, P.O. Box 210, Germantown, MD, or an experienced testing laboratory approved by the City Engineer. Inspection agencies not accredited by the American Lumber Standards Committee shall submit for approval a resume to the City of Lee's Summit Public Works Engineering Department. The resume of the agency shall include the agency's history of inspection of timber and treated products, a listing of state highway agencies which have approved the inspection agency and a listing of state agencies for which the inspection agency has performed inspection.

2905.7 Certification: Electric substation, service and span wire assembly poles will not require certified test reports.

2905.8 Acceptance: Acceptance of material will be based on satisfactory supplier's certification or inspection agency certifications, and upon results of any tests deemed necessary by the City Engineer at destination to ascertain compliance with these specifications.

2906 Material: All material, equipment and incidental parts shall be of new stock unless the contract provides for relocation of existing units or use of units furnished by others to be retained by others. New equipment and material shall be similar manufacturer and be the product of reputable manufacturers and shall be in accordance with Caltrans 170 Specifications, ICEA, IMSA, ITE, MUTCD, NEMA, RETMA, NEC and the regulations of the National Board of Fire Underwriters, as applicable, and shall meet the approval of the City Traffic Engineer. The cost of incidental materials not mentioned in the Plans or Specifications shall be considered subsidiary to other items in the contract.

2906.1 Materials for traffic signal equipment, poles, conduit, cable, and other items not specified under section 2906 are covered elsewhere within these Specifications or on the Plans or Project Special Provisions.

2906.2 Stainless Steel Bolts, Nuts and washers. Nuts for Anchor Bolts shall be in accordance with ASTM A 563, Grade C, D or DH or ASTM A 194, Grade 2 or 2H. Stainless Steel Bolts, Screws and Washers shall be in accordance with ASTM A 193, Grades B5, B6, B7 or B16. Stainless Steel Nuts shall be in accordance with ASTM A 194.

2906.3 Bolts, nuts and washers, except stainless steel, shall be galvanized in accordance with AASHTO M 232, Class C or mechanically galvanized in accordance with AASHTO M 298, Class 55. Except for anchor bolts, galvanizing thickness shall not exceed 6 mils. Anchor bolts shall have a minimum yield strength of 55,000 psi and a minimum elongation of 14 percent in 2 inches or 12 percent in 8 inches. For anchor bolts and nuts, and for high strength bolts and nuts, except those in accordance with AASHTO M 164, the Contractor shall furnish to the City Engineer a test report certified to be the last completed set of mechanical tests for each size in each shipment. For high strength bolts and nuts in accordance with AASHTO M 164, the Contractor shall furnish a copy of the manufacturer's inspection test report for each production lot or shipping lot furnished to the City Engineer and shall certify the bolts furnished are in accordance with the requirements specified. Bolts and nuts specified to meet ASTM A 307 shall be accompanied by a manufacturer's statement that the bolts and nuts were manufactured in accordance with ASTM A 307.

2906.4 Concrete: Concrete shall be as specified in the contract. Concrete construction, including but not limited to, material, proportioning, mixing, slump, transporting, placement, finish, curing, and surface seal shall be in accordance with ACI 301 Standard Specifications for Structural Concrete. All reinforcing steel shall meet the requirements of reinforcing steel for concrete structures.

2906.4.1 All material will be subject to the inspection and acceptance by the City Inspector.

2906.5 Reinforcing Steel for Concrete Structures: This work shall consist of furnishing and placing reinforcing steel of the designated shape, size and grade as shown on the Plans. All material shall meet the requirements of steel bars for concrete reinforcement. AASHTO specifications, when referenced, will control the physical properties, chemical properties and handling and storage of the material, except as otherwise specified herein or shown on the Plans.

2906.5.1 Unless otherwise specified, reinforcement shall be deformed bars in accordance with AASHTO M 31, AASHTO M 42 or AASHTO M 53. Bars in accordance with AASHTO M 42 and M 53 shall be in straight lengths only.

2906.5.2 Spiral reinforcement shall be in accordance with Section 2906.5.1, except that the reinforcement may be plain or deformed or shall be cold drawn steel wire in accordance with AASHTO M 32 or deformed steel wire in accordance with AASHTO M 225.

2906.5.3 Welded steel wire fabric shall be in accordance with AASHTO M 55 or AASHTO M 221.

2906.5.4 Epoxy coated reinforcing steel shall be in accordance with AASHTO M 284/M284M-2 except as otherwise specified herein or shown on the Plans. Only steel in accordance with Section 2906.5 shall be used.

2906.5.4.1 Coated bars shall not be spliced except as shown on the Plans.

2906.5.4.2 Organic coatings, other than epoxy, shall not be used.

2906.5.4.3 Patching or repair material shall be compatible with the coating, inert in concrete and in accordance with the epoxy resin manufacturer's recommendations. The material shall be epoxy and be suitable for application at the plant or in the field to uncoated areas and damaged areas of the coating.

2906.5.5 Documentation of uncoated steel shall include the steel manufacturer's certified mill test report showing complete chemical and physical test results for each heat.

2906.5.6 Documentation of coated steel shall include the coating applicator's certification that all material used, the preparation of the bars, coating and curing are in accordance with these Specifications, and that no bar contains more than one holiday per linear foot. The certification shall include or have attached specific results of tests of coating thickness and flexibility of coating.

2906.5.7 Reinforcing steel shall be accurately cut and bent to the dimensions and shapes shown on the Plans. Cutting and bending tolerances for reinforcing steel shall be in accordance with the Concrete Reinforcing Steel Institute's *Manual of Standard Practice*. Flame-cutting of uncoated reinforcing steel will not be permitted.

2906.5.8 Reinforcing steel shall be protected from damage at all times. When placed in the work and before concrete is placed, reinforcing steel shall be free from dirt, oil, paint, grease, loose mill scale, thick rust, any dried mortar and other foreign substances. A thin layer of powdery rust may remain. All reinforcing steel required for superstructure concrete, such as slabs, girders and beams and top slabs of culverts with more than a 4-foot span, shall be held securely in correct position with approved metal or plastic bar supports and ties. Reinforcing bars shall be positively secured against displacement. For bridge decks and top slabs of culverts, bars in the top mat shall be firmly tied with wire at each cross or lap. At other locations, the bars shall be firmly tied at alternate crossings or closer. The steel shall be tied in the correct position with proper clearance maintained between the forms and the reinforcement. The Contractor shall construct the unit as shown on the Plans. Measurements to reinforcing steel will be made to the centerline of bar, except where the clear distance from face of concrete is shown on the Plans.

2906.5.9 Bars shall not be spliced, except as shown on the Plans or as directed by the City Engineer.

2906.5.10 Mechanical bar splice systems, as shown on the Plans, shall be capable of developing 125 percent of the specified yield strength of the bar being spliced and shall be installed in accordance with the manufacturer's recommendations and as modified herein.

2906.5.10.1 The Contractor shall furnish to the City Engineer a manufacturer's certification stating that the mechanical bar splice systems are in accordance with this specification. The certification shall include or have attached specific results of tests showing yield and ultimate tensile load capacities.

2906.5.10.2 The splicing system may attach directly to the bars being coupled or may be of a type that provides reinforcing bars of like size that lap with the bars being joined. A threaded type

splice system will be required where clearance considerations require the splicing device to be placed flush to the face of the construction joint for the initial concrete placement.

2906.5.10.3 Reinforcing bar lengths shown in the bill of reinforcing steel may require modification to accommodate the specific mechanical bar splice system that will be used. The Contractor shall determine the actual reinforcing bar lengths to accommodate the manufacturer's recommendations for installation of the mechanical bar splices.

2906.5.11 High Strength Anchor Bolts, Nuts and Washers: All accessories shall be galvanized to ASTM A-153 standards. The anchor bolts shall be hot dipped galvanized on threaded end after threading. The galvanizing shall include all threads and not less than six inches of the adjacent unthreaded portion of the bolts. Anchor bolts shall be threaded to a length shown on the Plans or in the standard details. Threads shall be Coarse Thread Series as specified in ANSI B1.1 and may be formed by cutting or rolling. Nuts for anchor bolts shall be Heavy Hex leveling nuts and Heavy Hex nuts as specified in ANSI B18.2.2. Nuts shall comply with the proof load or Brinell hardness requirements of ASTM A307. After galvanizing, the thread fit of the bolt-nut combination shall be snug and shall be such that the nuts can be turned on the bolts without the application of excessive torque.

2906.6 Shop Drawings: Before commencing the installation of any material or equipment, the Contractor shall submit four (4) copies of complete shop drawings for manufactured materials and equipment to the City Traffic Engineer for approval. Manufacturers' bulletins, leaflets and other descriptive data that contain cuts, dimensions, specifications and wiring diagrams will be acceptable for standard cataloged equipment. Such bulletins, leaflets and other descriptive data shall be clearly marked to show the item to be used to satisfy a required item in the schedule of materials shown on the Plans, or as specified in the Project Special Provisions. The City Traffic Engineer may require other descriptive data, drawings, and diagrams for non-cataloged equipment or materials. In the event any items of material or equipment contained on the shop drawings fail to comply with the specification requirements, such items may be rejected by the City Traffic Engineer. Orders for material and equipment shall not be placed until written approval is obtained from the City Traffic Engineer. A list of pre-approved equipment and material is available through the Public Works Traffic Engineering Division. Only items on the latest revision of the pre-approved list will be accepted for use. Approval of the items on the equipment and material list will not relieve the Contractor of responsibility for satisfactory performance of the installation.

2907 Signal Heads: Each signal head of one or more signal faces shall be conventional or, if designated on the Plans, optically limiting. The Contractor may furnish aluminum or polycarbonate signal heads. Each vehicle signal head shall be a watertight assembly of one or more signal faces of the sizes shown on the Plans. All brackets and fittings necessary for proper mounting with the type of signal support designated on the Plans shall be furnished. Each signal face shall consist of one or more signal sections, rigidly and securely fastened together, capable of being positively positioned to control the movement of one direction of traffic. Each signal section shall be a self-contained assembly consisting of an optical unit with housing, housing door, and visor. All signal heads on a project shall be the product of one manufacturer and shall be single model number for like items. For signal modification projects, new signal heads shall match existing signal heads with respect to manufacturer and model. The position of signal indications shall be as specified in the Plans and Specifications. Each traffic signal face shall consist of a number of identical signal section housings rigidly fastened together. Signal heads shall not be painted in the field. 5-Section signal heads mounted on mast arms shall be "doghouse" style. 5-Section signal heads mounted on poles shall be inline.

2907.1 Housing, Door and Visor: If existing housings are to be combined with new housings, the new housings shall be adaptable to the existing. All housing, doors and visors shall be made of durable polycarbonate and shall be black in color. Each shall be clean, smooth and free from cracks, and other imperfections. The housing shall be designed as a self-contained unit capable of separate mounting or inclusion in a signal face containing two or more signal sections securely fastened together. Housings shall be equipped with round openings in the top and bottom so that it may be rotated between waterproof supporting brackets and thus be capable of being directed at any angle in the horizontal plane. Housings shall be equipped with positive locking devices to maintain a specific angle of direction when in place. The doors shall be suitably hinged and held securely to the body of the housing by simple stainless steel locking devices. All other door parts shall also be of stainless steel material. Doors provided on 5-section "doghouse" style signal heads shall open in opposite directions such that a clear opening is provided between two adjacent housings. Neoprene gasketing shall be used between the lenses and reflectors to exclude dust and moisture. Signal visors shall not be less than 0.05 inches thick and shall be tunnel type. Pedestrian visors shall not be less than 0.06 inches thick. Signal visors shall be at least 9.5 inches long for 12-inch diameter signals and shall angle slightly downward. Pedestrian visors shall have a 9-inch to 9.75 inch length. All visors shall be designed to fit tightly against the door and shall not permit any perceptible filtration of light between it and the housing door. The optical unit and visor shall be designed as a whole so as to eliminate the return of outside rays entering the unit form above the horizontal.

2907.2 Louvers: Louvers, if specified in the Plans, shall be installed in a tunnel visor with the fins or baffles in a vertical position.

2907.3 Hardware. Fittings shall be secured to the signal housing by a closed threaded nipple and hex nut. Cast nipples shall not be used.

2907.4 Signal Head Mounting: Vertical bracket mounted signal heads, as shown on the Plans, shall be supported by a one-piece mounting bracket watertight assembly made entirely of a durable polycarbonate and be black in color. Each bracket shall be either plumb or level, symmetrically arranged and securely assembled. Each bracket shall have serrations for positioning traffic signals in increments of 5 degrees. Construction shall be such that conductors are concealed within the assembly. Brackets shall be attached to the pole of pedestal by approved stainless steel banding and brackets. Mast arm signal head assemblies shall be rigid mounted utilizing a universally adjustable bracket consisting of both top and bottom brackets with a center vertical extruded aluminum support tube and terminal compartment (box) attached to the mast arm by means of a clamp kit with steel cable. The vertical support tube shall allow wire entry at any point and be equipped with a vinyl insert that conceals the wiring. The vertical support shall not extend more than 3 inches beyond the horizontal bracket. The lower bracket arm shall be hollow for wiring entry into the signal head. Traffic signal heads and pedestrian signal heads shall not share mounting hardware.

2907.5 Backplates: Stainless steel bolts, nuts and flat washers shall be used to fasten the backplate to the head. Bolt lengths shall be selected to not interfere with maintenance operations. Any connection to the top of any signal section shall be watertight. Backplates shall be provided on all signal heads as shown on the Plans. Backplates shall be black in color and constructed of flat pre-cut or preformed thermoplastic. Flat pre-cut thermoplastic backplates shall have a minimum thickness of 0.250 inch. Preformed thermoplastic backplates shall have rolled out edges and a minimum final thickness of 0.10 inch.

2907.6 Indications: All signal indications for new signal installations as well as signal modification projects shall be Light Emitting Diode (LED) displays, LED indications shall be 12-inch diameter, 120-volt LED's in a self-contained enclosure with a 10-year life expectancy. LED indications shall comply with the latest edition of Institute of Transportation Engineers (ITE) specifications for LED vehicle traffic signal modules. Pedestrian indication legends shall conform to the ITE specification for pedestrian traffic control signal indications. Pedestrian WALK and Countdown indications shall be lunar white in color. Pedestrian DON'T WALK hand symbol shall be orange in color.

2907.7 Signal Faces: Vehicle and pedestrian signal faces shall be covered or turned away from approaching traffic until placed in operation. When ready for operation, the signal faces shall be securely fastened in position facing approaching traffic. Vehicle and pedestrian signal faces shall be aimed laterally at the approximate center of the lane or lanes the signal face controls.

2907.8 Optically Limiting Signal Heads: The signal section shall be a self-contained assembly consisting of an optical unit, section housing, housing door, terminal block and necessary gaskets to ensure a weatherproof unit. The optically limiting signal head shall be capable of separate mounting or inclusion in a signal face containing two or more signal sections. If existing housings are to be combined with new housings, the new housings shall be adaptable to the existing. Each signal section shall be installed and directed and the optical limiter masked in accordance with manufacturer's recommendations to provide indications in accordance with the Plans or as directed by the City Traffic Engineer.

2907.9 Painting and Finishing: All aluminum signal head parts, including the housing, housing door, visors, louvers and backplates, except the mounting brackets and other hardware, shall be primed and painted flat black in their entirety. All polycarbonate signal head parts, including the housing, housing door, visors and backplates shall be constructed from ultraviolet stabilized black-impregnated polycarbon resin. The mounting brackets and hardware, except the aluminum pipe brackets and polycarbonate brackets, shall be galvanized steel or unfinished aluminum. Aluminum pipe brackets shall have a spun finish. Painting of the mounting brackets and hardware will not be permitted. All metal parts reused for modification of a signal installation shall be painted in accordance with the requirements for new material. If the painted surface of any equipment is damaged, the surface shall be repaired to the satisfaction of the City Traffic Engineer.

2908 Signs: Signs for signal installations shall be furnished by the Contractor. Signs shall be mounted to the mast arms using strap supports or Astro-Brackets. There shall be a minimum of two supports per street name sign placed no more than 3 feet apart with a maximum of 1 foot from the edge of the sign. Sign installation and all material required for any sign mounting, shall be furnished by the Contractor. All permanent traffic signs and street name signs shall conform to the requirements of the MUTCD and Section 3000 of the City of Lee's Summit Design and Construction Manual. Any signs not detailed on the Plans shall be in accordance with *Standard Highway Signs* by the U.S. Department of Transportation, Federal Highway Administration. Signs shall be mounted as shown on the Plans.

2909 Poles and Mast Arms: Prior to installation, manufacturer and drawing numbers shall be submitted by the Contractor to the City Traffic Engineer for approval in writing. Four copies of applicable pre-approved drawings shall be supplied with the poles. A grounding lug shall be provided for all units. A grounding conductor shall provide grounding continuity for all metallic, non-current carrying poles in one circuit.

2909.1 Steel Pedestal Poles: Steel pedestal poles shall be 4 1/2 –inch outside diameter schedule 40 steel pipe. The base shall be cast iron, free from imperfections, and shall be provided with a suitable plastic, fiberglass or cast door for wiring access. The grounding lug shall be inside the base. The bolt circle and hole diameter shall be as shown on the Plans. After fabrication, poles and bases shall be fully galvanized.

2909.2 Aluminum Pedestal Poles: Aluminum pedestal poles shall be schedule 80 straight tubing of 6063-T6 aluminum alloy in accordance with ASTM B 210, with a 4 1/2-inch outside diameter. The pedestal base casting shall be either permanent mold casting of Alloy 356.0 F, in accordance with ASTM B 108, or sand castings of Alloy 356.0 F, in accordance with ASTM B 26. The base shall be free from imperfections and shall be provided with a suitable door for wiring access. The base and pole shall be joined by a threaded connection. Welded connections will not be permitted. The grounding lug shall be provided inside the base. All hardware shall be non-ferrous metal or stainless steel.

2909.3 Signal Pole and Mast Arm Pre-Approval: Fabricators shall submit six copies of shop drawings and supporting calculations to City of Lee's Summit Public Works Engineering Division. Submittals shall be approved in writing prior to fabrication of the signal poles and mast arms. Shop drawings shall indicate complete design details required for pole and mast arm fabrication, including material grades and thicknesses, welding and orientation of any longitudinal seams. The projected areas and weights of signs and signals used in the design of the pole and mast arms shall be shown on the shop drawings. Design details for all possible pole and mast arm combinations shown on the Plans may be submitted. Shop drawings shall provide pole and mast arm installation and hardware details. All welding procedures shall be prepared by the manufacturer as a written procedure specification and shall be submitted with the shop drawings for approval. Approval of the weld procedures will be required before approval of the shop drawings. Shop drawings shall indicate the specific approved welding procedure to be used for each joint. Shop drawings and supporting stress calculations shall be signed and sealed by a registered professional engineer in the State of Missouri. Manufacturers shall submit all required documentation, in accordance with Section 2909.4.3. Upon written approval, pre-approved drawings may be used on any project where the design conditions of the shop drawings are not exceeded.

2909.4 Steel Poles and Mast Arms: Steel poles and mast arms shall be round, continuously tapered, hollow shafts fabricated as one continuous shaft or as individual segments at least 10 feet long, joined together using electrically welded, intermediate, transverse, full penetration, circumferential joints. Steel poles and mast arms shall be fabricated from basic oxygen or open-hearth steel sheet. The continuous, tapered, hollow shafts or individual segments shall be manufactured from one or two lengths of steel sheet, with one or two continuous, welded, longitudinal seams. The longitudinal seams in the mast arm shall be located outside of the upper half of the cross section of the member. Where transverse, full penetration, circumferential welds are used, the fabricator shall furnish to the City Engineer written certification that 100 percent of all such welds have been radiographed or ultrasonic tested by an independent testing agency using a qualified non-destructive testing technician, as described in Section 6.14.7 of ANSI/AWS D1.1 Structural Welding Code-Steel and equipment calibrated annually. The testing agency shall be approved by the City Engineer prior to fabrication. Pole base and mast arm attachment plates shall be plate steel attached to the larger end of the shafts by continuous welds on the inside and outside of the shaft. After manufacture, the material shall have a minimum yield strength of 48,000 psi.

2909.4.1 A handhole equipped with a suitable metal cover shall be provided in the pole near the base, and 12 inches above the mast arm connection if luminaire mounting is specified. A grounding lug or connector shall be provided inside the pole near the handhole. A removable raintight metal pole cap shall be provided on the top of the pole and on the small end of each mast arm. All handhole covers and metal caps shall be securely attached to the pole or arm with a galvanized steel chain and shall be held in place by screws. The chain shall be attached to the inside of the pole or arm and shall be of sufficient length to allow maintenance access. An aluminum or stainless steel identification tag shall be provided with all poles and mast arms as shown on the Plans. The letters and numbers on the tag shall be embossed or engraved. The pole tag shall be attached to the pole 6 inches above the top of the handhole. The mast arm tag shall be attached 3 inches from the base of the end cap. The base plate shall be equipped with four cast steel or cast iron nut covers in accordance with AASHTO M 103 or M 105, or four aluminum nut covers and shall have four galvanized or stainless steel screws for securing covers to the pole. All poles, shoe bases, base plates and cast steel or cast iron nut covers shall be fully galvanized after fabrication. All anchor bolt nuts shall be completely covered by nut covers. Luminaire bracket arms, when specified, shall be included with the pole and mast arm. The Contractor may furnish poles with the shape, gage and dimensions meeting or exceeding those required by the Plans and Specifications, provided shop drawings are submitted and approved in accordance with Section 2909.3

2909.4.2 Welding and fabrication of the assemblies shall be in accordance with the ANSI/AWS D1.1 Structural Welding Code-Steel. All requirements of the welding code for tubular structures will apply to the fabrication for the pole and mast arm shafts and shall include any welds used to attach these members to plates or other hardware. The manufacturer shall employ qualified personnel to perform all visual and nondestructive testing (NDT) required. In addition to the visual inspections and NDT that may otherwise be required by the welding code, the manufacturer shall perform 100 percent magnetic particle (MT) testing of circumferential fillet welds used to attach the flange plate to the larger end of the mast arm shaft. NDT personnel shall be qualified as set forth in paragraph 6.14.7 of ANSI/AWS D1.1 Structural Welding Code-Steel. Qualifications of NDT personnel shall be submitted to the City Engineer for approval.

2909.4.3 The pole and mast arm manufacturer shall be certified under the AISC certification program, Conventional Steel Building, or higher category. Evidence of current AISC certification will be required prior to the approval of shop drawings, and lapsing of the certification will be cause for the manufacturer's removal from the approved list of suppliers.

2909.4.4 Steel poles, luminaire bracket arms, mast arms, nut covers and plate steel bases shall be hot-dip galvanized inside and out after fabrication to ASTM A-123 standards, visual inspections and NDT testing. Galvanized material shall be handled in such a manner to avoid damage to the surface. Any galvanized material on which the coating has been damaged will be rejected or may, with approval from the City Engineer, be repaired in accordance with Section 2909.4.5.

2909.5 Fabricator's Certification: Prior to erection of the poles and mast arms, the Contractor shall furnish to the City Engineer a fabricator's certification. The certification shall specifically state the fabricated poles and mast arms have been quality control inspected by the fabricator and all material and manufacturing processes used were in full compliance with the specification requirements and the approved shop drawings and weld procedures. Certification shall be accompanied by supporting documentation, including the results of the visual inspections and NDT in accordance with Section 2909.4.2 and copies of the pre-approved drawings required by Section 2909.3.

2910 Traffic Signal/Intersection Lighting: All lighting equipment shall conform to the requirements of Section 2800 of the City of Lee's Summit Design and Construction Manual. All luminaire bracket arms shall be oriented to run parallel with the signal mast arm unless otherwise noted on the Plans.

2911 Traffic Signal Controller Assemblies: The actuated controller and cabinet shall be a NEMA Type Traffic Signal Controller System. Traffic controller assemblies will be defined as the complete assembly of all required equipment and components for control of traffic signal indications. The type of controller assembly required for each location shall be as specified in the Plans. The traffic signal controller, cabinet and related equipment shall be delivered to the City for testing prior to installation. All signal timings will be provided by the City Traffic Engineer. The Contractor shall coordinate material delivery and pick-up with the Public Works Operations Department (969-1870) at least 48 hours prior to transportation. A minimum of 4 weeks shall be permitted for testing between delivery and pick-up. The Contractor assumes all damage liability and should inspect all materials before and after transportation of equipment.

2911.1 NEMA TS1: Each NEMA TS1 controller assembly shall consist of a controller cabinet, signal controller, back panel, conflict monitor, card rack assembly, all required wiring, switches and connectors and all other equipment as defined in these Specifications and as shown on the Plans. Double controller assemblies to control two intersections shall consist of a controller cabinet, two signal controllers, two back panels, two conflict monitors, two card rack assemblies, all required wiring, switches and connectors and all other equipment as defined in these Specifications and as shown on the Plans.

(a) Each controller and associated equipment shall be designed to operate on 120 volts, 60 hertz, single phase, alternating current.

(b) Variations in the voltage of the power supply of ± 10 percent or sustained temperatures inside the cabinet between -20 and 165 F shall not change the total time cycle of pretimed controllers or the length of any interval, portion, period or unit extension of actuated controllers by more than five percent or cause electrical or mechanical damage. Heater elements shall not be used to attain compliance with these requirements.

(c) Vibration shall not affect normal operation of any equipment.

(d) All controllers and other specified auxiliary equipment shall be properly protected with fuses on each applicable unit. Fuses shall be installed in 1/4-twist or screw-in type fuse holders. Pop-out fuse holders will not be permitted.

2911.2 Controller Cabinets: Controller cabinets shall be cast aluminum or 0.125 inch reinforced sheet aluminum alloy and shall be of clean-cut design and appearance. The cabinet shall provide ample space for housing all equipment and components. Controller cabinets housing solid state controllers shall be furnished with unused cabinet space measuring 18 inches wide by 12 inches high by 12 inches deep, unless coordination equipment is specified on the Plans. For pretimed and actuated NEMA controllers, the cabinet shall support a sixteen-position back panel. Double controller cabinets for two controllers shall support two sixteen-position back panels. All double cabinets shall have two doors that are hinged on the outside corners of the cabinet such that the doors open away from each other. Double cabinets shall have a divider between the two halves of the cabinet with an 8-inch opening between the compartments at the bottom of the divider for wiring between the compartments. The cabinet shall contain a rigid mounting table, sliding ways or hinged support of such construction that the controller and auxiliary equipment may be withdrawn from the cabinet without breaking any electrical connections or interrupting normal controller operation. Hinged supports shall be welded to the controller cabinet. Electrical connectors on the controller and auxiliary equipment to all circuits shall be NEMA 1/4 twist or MS type. Components of controller cabinets shall meet the following requirements.

(a) A hinged door or doors shall provide complete access to the interior of the cabinet. Door holds shall secure the door in an open position at least 90 degrees from the closed position and shall be furnished with each cabinet. The doors shall fit against a raintight gasket. Each door shall have a stamped or raised outside designation, "Traffic Control" or other approved identification. Each main cabinet door shall have a No. 2 Corbin cabinet lock and provisions for locking with a padlock. The handles for each door shall swing outward. An auxiliary door, positioned on each main cabinet door, equipped with a raintight gasket, shall allow access to a police panel and shall be equipped with a lock whose key will not unlock the main door. Two keys shall be furnished for each type lock used. The door hinges and pins shall be of corrosion-resistant metal. Pins shall be rolled or solid rod, at least 1/8 inch in diameter, except if continuous hinges are furnished, the pins shall be continuous the full length of the hinges, and shall be no less than 1/16 inch in diameter.

(b) The back panel in all controller cabinets shall be hinged at the bottom to permit the top of the panel to be rotated forward and down to an angle of no less than 45 degrees with all components, including load switches, attached for maintenance purposes. The bottom of the back panel shall be no less than 6 inches above the bottom of the cabinet.

(c) Cabinets housing solid state controllers shall have a thermostatically controlled ventilating fan with exhausting capability in an enclosure of at least 150 cubic feet per minute for cabinets up to 30.5 cubic feet and at least 250 cubic feet per minute for cabinets 30.5 cubic feet and more, installed in the top of the cabinet. Cabinets shall be supplied with a replaceable furnace-type fiberglass filter of at least one square foot area mounted behind louvers in the lower one-fourth of the door.

(d) Each controller cabinet shall be furnished with a clearly labeled switch mounted in the access or police panel to place the signals on flash. Operation of this switch shall not affect the electrical power supply to the controller. This shall be the only control switch accessible from the police panel.

(e) Each cabinet shall be provided with a grounded service outlet and a switch controlled lamp receptacle.

(f) Each cabinet shall contain a separate aluminum power panel containing the following equipment.

(1) Two Type B circuit breakers in accordance with all City of Lee's Summit lighting specifications. One breaker shall interrupt power to the controller and signals. The frame size and trip rating will be shown on the traffic signal plans or designated in the contract. The second Type B circuit breaker shall be an auxiliary breaker that interrupts power to the cabinet lamp and receptacle. The frame size and trip rating shall be 15 amperes.

(2) One mercury contactor controlling power to the signal bus.

(3) One radio frequency line filter.

(4) One line surge protector.

(5) One terminal block for alternating current power input.

(6) One ground bus terminal block.

(7) One isolated neutral bus terminal block.

(g) If specified, a manual operation push button shall be installed in the police panel. The push button shall be wired for manual operation of the signals. The push button shall be water-resistant, designed to protect the user against electrical shock, and shall be supplied with a coiled cord with a nominal 6-foot stretched length. A clearly labeled switch shall also be installed in the police panel to switch between manual or automatic operation of the controller.

(h) A separate grounded service outlet shall be provided in the controller cabinet for supplying power to auxiliary equipment.

2911.3 Flasher Unit: Each controller, through terminal options, shall permit yellow-red or red-red flash operation. Indications shall be flashed at no less than 50 or more than 60 flashes per minute, with approximately 50 percent dwell time. A two-circuit flasher, alternate flash and three flasher field circuits for each of the two flasher circuits will be required. A separate flasher shall provide flashing pedestrian indications when required by the contract. The timing of flashing pedestrian intervals shall be separately adjustable from all other timed intervals. The flasher shall be solid state with ratings of at least 15 amperes per circuit and shall comply with the latest revision of NEMA Standards Publication TS. The flasher units shall have a 150-volt metal oxide varistor (MOV) placed on each output flash terminal. Uniform code flash circuitry will be required for each controller. Flashing operation shall be in accordance with the MUTCD.

2911.4 External Time Switches: External time switches shall be solid state, keyboard entry and shall contain filtering and shielding circuitry to protect the unit's operation against electrical interference. Timing shall be based on the 60-hertz power supply frequency. Each unit shall contain a programmable automatic central daylight time compensation feature and a back-up power source to maintain time and memory functions during loss of alternating current power. Each unit shall provide a weekly program with at least 20 event changes per week.

2911.5 Wiring: The controller cabinet shall be equipped with a 600-volt heavy-duty one piece mechanical screw connector offset tang assembly attached to a barrier terminal strip for terminating field conductors. Each mechanical screw connector shall accommodate up to four No. 14 AWG conductors. The connector shall be mounted horizontally on the inside back of the cabinet, approximately 6 inches from the bottom of the cabinet. All wiring to the terminal strips, except the incoming field circuits, shall be performed by the controller manufacturer. The terminal strips shall accommodate at least:

(a) Two terminals for the power supply.

(b) An unfused terminal for neutral side of power supply line.

(c) One terminal for each signal lamp circuit and one terminal for the common return from each signal face.

(d) If detectors are used:

(1) Two terminals for each detector.

(2) Screw terminal strips mounted vertically on the side of the cabinet approximately 6 inches from the bottom of the cabinet.

(3) All inductive loop detector inputs shall be protected with two 30-volt MOVs with a 30-j rating. An MOV shall be connected between each field terminal and cabinet ground.

(e) Terminals for interconnect cable when the controller is to be hard-wire interconnected shall be fused and provided with a 150-volt MOV with an 80 j rating.

(f) Terminals for closed loop system interconnect cable shall be fused and provided with a 30-volt MOV with a 30 j rating.

All wiring shall be insulated, stranded copper wire and shall be neatly bundled and secured with plastic cable ties. For double controller cabinets, all wiring for each intersection shall be terminated in the same compartment of the cabinet as the signal controller for that intersection. Incoming field circuits shall be routed horizontally from the conduit to the back of the cabinet, then vertically to the terminal block. All terminals shall be labeled and not be visibly obstructed. All field leads shall be identified by means of round aluminum identification tags with a minimum thickness of 0.1 mils attached to the cables with a copper wire to correspond with the Plans. The outgoing signal circuits shall be of the same polarity as the line side of the power supply, and the common return of the signal circuits shall be of the same polarity as the ground side of the power supply. The power supply shall be provided through three single conductor cables. The ground side of the power supply shall be carried throughout the controller in a

continuous circuit, and shall be secured to a ground bus bar in an approved manner. All field conductors shall be terminated in the controller cabinet.

2911.6 Back Panel Wiring: All wiring on the backside of the controller back panel shall be neatly bundled and secured with plastic cable ties. Any multi-conductor cable between the controller or auxiliary equipment and the back panel shall be contained in an expandable braided sleeve. All wiring shall be discrete insulated wires and shall be soldered directly to lugs on the back of terminal blocks and sockets. Printed circuit boards shall not be used. Regardless of the number of phases specified on the Plans, all load switch positions shall be completely wired for use. If pedestrian phases are not specified, twelve-position back panels for actuated NEMA controllers shall be configured for operation of eight phases and four overlaps. If pedestrian phases are specified, 12-position back panels shall be configured for operation of eight phases and four pedestrian phases or a combination of overlaps and pedestrian phases if specified on the Plans. Twelve-position back panels for pretimed controllers shall be configured for operation of 36 circuit outputs from the controller unless otherwise specified on the Plans. A flash transfer relay socket shall be provided for each pair of load switch positions. Flash circuit one shall be wired to positions one, 3, 5, 7, 9 and 11. Flash circuit 2 shall be wired to positions 2, 4, 6, 8, 10 and 12. All flash transfer relay sockets shall be fully wired for operation. All controller harness wiring shall be connected to labeled terminals on the front of the panel.

2911.7 Solid State Controllers: This section describes the general specifications for actuated solid state controllers. If requested by the City Traffic Engineer, the Contractor shall provide a prototype controller for testing and evaluation.

(a) Each controller shall be solid state keyboard entry and the circuit design shall use microprocessor techniques.

(b) Timing shall be accomplished in a digital manner by counting the 60 hertz power supply frequency. Timing circuits, interval and phase switching functions shall be accomplished by solid state circuitry. Removing, changing wires or using any tools to make timing interval adjustments shall not be necessary. The controller shall indicate the right of way conditions of the phase timing interval in effect, detector or actuation on each phase and memory conditions or demand on each phase for vehicles and pedestrians by use of status lights or display panels.

(c) Opening and closing of signal lamp circuits shall be performed by plug-in solid state load switches, rated at no less than 10 amperes and loaded at a maximum of 6.7 amperes, located external to the controller. All load switch jacks shall be completely wired to field output terminal strips. Actuated and pretimed controllers shall have a minimum of twelve load switch jacks. Each load switch shall provide three independent circuits with "on" indicator lamps and shall comply with the latest revision of NEMA Standards Publication TS.

(d) Each controller assembly shall contain a conflict monitor external to the controller circuitry conforming to NEMA Standards Publication TS. The monitor shall cause immediate transfer to flashing operation when conflicting or absent indications occur or when a voltage fault occurs. When the conflict monitor actuates flashing operation, the controller shall freeze or stop timing in the condition causing the actuation until manually reset. A single lamp failure in any signal head shall not cause the monitor to actuate.

(e) Each controller cabinet shall be furnished with the following switches:

(1) Power Interrupt Switch - A switch located inside the main cabinet shall interrupt electrical power to the controller during maintenance on the controller. Operation of this switch shall not affect the flash operation. This switch shall not be accessible via the police panel.

(2) Flash Switch - A switch mounted in the police panel shall place the signal on flash. Operation of this switch shall not affect the electrical power supply to the

controller. When the signals are returned to normal operation the external start shall be activated causing the controller to revert to the programmed initialization phase(s).

(3) Stop Time Switch - A three-position switch mounted inside the main cabinet shall provide the following functions:

(i) Stop Time - Causes the controller to stop time.

(ii) Normal - Allows the controller to cycle all phases, but during conflict monitor flash causes the controller to stop time.

(iii) Run - Allows the controller to cycle all phases and during any flashing operation allows the controller to continue cycling all phases without displaying them on the signal heads.

For double controller cabinets, two sets of switches shall be provided, one set for each controller installed in each compartment.

(f) During flash condition, controller operation shall permit the cycling of all signal phases without an external load being connected to the field terminals.

(g) Solid state controllers shall have electronic filters to prevent interference caused by the opening and closing of circuits in electro-mechanical auxiliary equipment.

(h) The controller shall be of modular design constructed for individual removal and replacement in the controller by multiple prong jacks or outlets without modifying wiring. Hand operable positive locking devices shall be used to hold the modules securely in the controller.

(i) The functional operating circuits and associated components shall be grouped in plug-in printed circuit assemblies. Similar assemblies shall be interchangeable between controllers manufactured by the same company.

(j) The controller shall contain the necessary phase sequence, interval sequence timing, power supply and monitoring equipment required to supervise the operation for the phasing shown on the Plans, including any future controller expansion. If future phases are specified, the controller shall be completely configured to accept the future phases.

(k) Controllers that are interconnected shall have a coordinated/free operation switch to allow the controller to operate in coordination with the system or run free.

(l) High energy transient surge protection shall be provided on all solid state controllers to minimize damage to the controller and auxiliary equipment. This device shall be located on the incoming 120 volts, 60 hertz power service between the controller and signal circuit breaker and the power inputs to the controller and auxiliary equipment. The arrestor shall meet the latest NEMA specifications for surge protection.

(m) All flash operation called from a source external to the controller shall occur through the flash transfer relay.

(n) Any multi-conductor cable shall be contained in an expandable braided sleeve.

(o) Switches or relays that completely interrupt power to the signal heads other than the protective circuit breaker shall not be installed in the cabinet.

(p) All controllers shall be capable of downloading all programming data to a printer via a front panel RS-232 connection. The controller shall be capable of printing directly to a printer or via an external computer. If an external computer is required, the required software shall be provided with the controller.

(q) All controllers shall be provided with internal pre-emption functions and circuitry.

2911.8 Solid State Actuated Controller: Each solid state actuated controller shall meet the latest revision of NEMA Standards Publication TS. Actuated controllers shall meet the following requirements:

(a) Recall by keyboard entry shall be provided for each phase to furnish continuous recall. With the recall function in the "OFF" position, the controller shall operate normally with

the right of way being transferred only upon pedestrian or vehicle actuation or external force-off control.

(b) Controllers shall be furnished with provisions for external maximum control for each signal phase complete with wiring to permit installation of a coordination unit. All wiring to facilitate coordination shall be terminated on terminal strips and complete information stating the function of each terminal shall be shown on the controller-wiring diagram.

(c) All phases shall contain a non-locking memory feature that can be energized or de-energized by keyboard entry.

(d) All phases shall be capable of being activated or inactivated by keyboard entry.

(e) On the cabinet inside door test panel, an external push button switch for each vehicle and pedestrian phase shall be provided. Each switch shall provide call to the phase assigned and ability to extend the phase. This detector input shall be independent of the circuitry between the amplifier and back panel.

(f) A Full D Panel (37 PIN) shall be provided.

(h) Actuated controllers shall be fully configured for operation of a minimum of eight vehicle phases, four pedestrian phases and four overlaps, regardless of the number of phases shown on the Plans.

2911.9 Timing Function: Timing intervals or periods shall be set by means of keyboard entry. Each timing interval shall be adjustable to any value within the following minimum ranges for each phase. Zero may be satisfied by a time increment of up to 100 milliseconds.

Interval	Range (seconds)
Minimum Initial	0-99
Unit Extension or Passage Time	0-9.9
Yellow Clearance	0-9.9
Red Clearance	0-9.9
Maximum I Green	0-99
Maximum II Green	0-99
Walk	0-99
Pedestrian Clearance	0-99
Seconds per Actuation	0-9.9
Maximum Initial	0-99
Time Before Reduction	0-99
Time to Reduce	0-99
Minimum Gap	0-9.9

2911.10 Auxiliary Equipment and Interfaces for Controllers: Interface panels shall be aluminum panels installed in the controller cabinet containing the required terminals and equipment. Interface panels shall be neatly laid out, neatly wired and easily accessible. Each auxiliary unit shall be enclosed in a suitably finished metal case and shall be mounted in the controller cabinet unless otherwise specified. The function of each auxiliary unit shall be indicated by an identification plate on the case. Auxiliary equipment cases shall be ventilated. Temperature, voltage and frequency shall be in accordance with Section 2911.

2911.11 Pre-Emption Interface: The pre-emption interface shall consist of internal preemption functions in the controller, any field wire termination panels, relays, wiring and connectors required for proper operation. The pre-emption interface shall be wired to transfer control of the signals to the pre-emption sequence when actuated and shall provide the color sequence specified.

After release of pre-emption, normal controller operation shall be automatically resumed except that actuated controllers shall be on recall for one complete cycle.

2911.12 Master and Local Coordination Interface: The coordination interface shall consist of internal coordination functions in the controller, and of any field wire termination panels, wiring and connectors required for proper operation. The master coordination interface shall supervise the actuated controller operating the signals in the intersection at which the actuated controller is located. Local coordination interfaces shall be supervised by the master coordination interface and shall in turn supervise the actuated controllers operating the signals at the intersections where the controllers are located. Coordination interfaces shall be connected to one another or to a telephone interconnection unit by a multi-conductor cable. The master coordination interface shall be furnished with internal time-based functions in the controller. The coordination interface shall provide the following:

(a) Fully actuated operation.

(1) Cycle length of the actuated controller may vary with traffic demand, but shall not exceed the cycle length set on the coordination interface.

(2) Vehicle and pedestrian detectors shall remain energized.

(3) During periods of light traffic, the actuated controller shall respond to detector demand on any signal phase.

(4) When there is continuous demand for all signal phases, the coordination interface shall cause termination of each signal phase in accordance with the time intervals set on the coordination interface for each signal phase.

(5) The actuated controller shall not be forced to transfer right of way to a signal phase if there is no demand.

(b) Semi-actuated operation.

(1) Signal phases, controlling the street on which signal progression is desired, shall be placed on maximum recall.

(2) Vehicle and pedestrian detectors shall remain energized.

(3) Transfer of right of way from the coordinated signal phase(s) shall not occur until there is detector actuation for a non-coordinated signal phase and only after the coordination interface has terminated the coordinated signal phase(s).

(4) The right of way interval awarded the coordinated signal phase(s) shall be governed by the time interval set on the coordination interface.

(5) If detector actuations for a non-coordinated signal phase(s) causes the phase(s) to time to maximum, the phase(s) shall be forced off and the coordinated phase(s) awarded right of way.

(6) If demand for the non-coordinated signal phase(s) is not sufficient to extend the phase(s) to maximum, right of way shall transfer to the coordinated phase(s) and remain there until demand for the non-coordinated phase(s) occurs and the coordination interface times the coordinated phase(s) to maximum.

(7) Detector actuation on a non-coordinated signal phase(s) occurring during the coordinated phase(s) right of way interval shall cause a call to be placed and retained for the non-coordinated signal phase(s).

(c) Fixed cycle length operation.

(1) All signal phases shall be placed on maximum recall.

(2) Vehicle and pedestrian detectors shall remain energized.

(3) The coordination interface shall control the time interval that each signal phase is awarded right of way.

(d) Free operation.

(1) When permitted by internal time-based functions, the coordination interface shall provide free operation of associated actuated controllers. During this operation the actuated controller shall operate without supervision by the coordination interface.

(2) Pretimed controllers, in a signal system supervised by a master coordination interface, shall revert to dial 1, reset 1 or internal time based coordination during free operation at the user's option.

2911.12.1 Each coordination interface shall have the following minimum operational characteristics:

(a) Three cycles.
(b) Eight splits.
(c) Eight force off periods per split.
(d) Three offsets per cycle.
(e) Selectable recall by signal plan.

2911.12.2 Each coordination interface shall have all of the following methods of synchronizing to the master sync pulse:

(a) Dwell. The coordinator shall establish a new offset by stopping the cycle timer in the coordinated phase(s) green, until the new offset value is reached.

(b) Dwell with Interrupt. The coordinator shall establish a new offset by stopping the cycle timer in the coordinated phase(s) green. The maximum time the coordinator can dwell shall be adjustable from 1 to 99 seconds.

(c) Shortway. The coordinator shall establish a new offset by the shortest route possible.

2911.12.3 Each master coordination interface shall be furnished with necessary relays and internal functions in the controller to provide the following supervisory functions:

(a) Semi-actuated operation.
(b) Fixed cycle length operation.
(c) Free operation.
(d) Cycle Transfer (cycle 1 to cycle 2, cycle 3 or cycle 4 and vice versa; cycle 2 to cycle 3 or cycle 4 and vice versa; cycle 3 to cycle 4 and vice versa).

2911.12.4 Each controller shall be capable of permitting the manual selection of the following:

(a) Cycle Length 1, 2, 3, 4 or System.
(b) Offset 1, 2, 3, 4 or System.
(c) Semi-actuated operation, fixed cycle length operation or free operation.

2911.13 Remote "ON - OFF" Switch (Pedestrian Interval Sequence): The following type of "On - Off" switches shall be furnished as specified:

(a) Type I. Type I switches shall consist of one manually operated heavy-duty switch in a circuit not exceeding 18 volts. Necessary relays shall be located in the controller cabinet for including or excluding the pedestrian phase in the phasing sequence or switching signals between flashing and sequence operation. This shall be accomplished by energizing or de-energizing the pedestrian signal indications and push-button detectors. The switch shall be enclosed in a weatherproof, cast aluminum housing equipped for pole mounting. The housing shall have a suitable lock, the key of which shall not unlock the controller cabinet. The housing shall be tapped for conduit.

(b) Type II. The Type II switch shall be operationally identical to the Type I, except the switch may be 120 volts and shall be located inside the police panel of the controller cabinet.

2911.14 Detectors: All detectors shall conform to Section 2912.

2911.15 NEMA Card Rack Assemblies: The supporting and connecting rack shall contain space for a minimum of two power supplies and shall have a minimum of eight card positions for two-channel detector units. Upper and lower slide guides shall be provided for the power supply and each detector card. Where detectors are specified, the rack and power supplies shall be included with the detectors, and no direct payment will be made.

(a) The card mounting rack shall be attached to the controller cabinet by a hinge or pivot assembly, which allows the rack to rotate horizontally so as to expose the rack wiring to facilitate maintenance operations. The rack shall be positioned to rotate out freely 90 degrees without conflicting with other wiring, equipment or the controller cabinet. Sufficient wire lengths shall be provided for rotation. The rack shall not block the back panel or other termination panels.

(b) The power supply shall be capable of supplying a minimum of 200 milliamps to each detection channel position. The power supply shall be capable of operating a full rack of time delay detectors regardless of the amount and type of detectors required. Each power supply channel shall power no more than one detector card. Each channel shall be individually fused.

(c) Each card rack detector shall have a regulator for the power input. The regulator shall have the appropriate power and voltage rating for operation of the detector.

(d) Card racks shall mate with a 44-terminal, double row, 0.156-inch contact spacing, Cinch Jones card edge connection 50-44A-30M or equivalent. Input/output connector pin terminations shall be in accordance with NEMA Specification TS. All useable functions shall be fully wired for use.

(e) All circuitry shall be of solid state, temperature compensating components.

(f) Unless shown otherwise on the Plans, each detector in the card rack shall be associated with the appropriate phase as follows:

Channel	Card Position							
	1	2	3	4	5	6	7	8
1	Phase 1	Phase 1 Phase 6	Phase 6	Phase 6	Phase 3	Phase 3 Phase 8	Phase 8	Phase 8
2	Phase 5	Phase 5 Phase 2	Phase 2	Phase 2	Phase 7	Phase 7 Phase 4	Phase 4	Phase 4

(g) Each detector channel shall be clearly labeled with phase and direction.

2911.16 Card Rack Detectors: Card rack detectors shall meet the following requirements:

(a) Card rack-mounted detectors shall incorporate two detection channels.

(b) Each detector channel shall have at least a two-frequency selection capability, at least two levels of operational sensitivity and shall be capable of tuning to a minimum inductance range of 70 to 1000 micro henries.

(c) All controls and indications shall be mounted on the front panel of the sensing unit, with the exception of extension and delay timing controls on card rack mounted detectors.

(d) A manual control shall be provided for each channel to select pulse or full presence operation.

(e) Each detector channel, after installation and initial adjustment, shall automatically tune to various loop configurations ranging in size from 6 x 6 feet minimum to 6 x 100 feet maximum. The maximum lead-in length shall be 750 feet.

(f) Each detector channel shall time out and retune automatically if a continuous vehicle occupation of the loop field for a nominal time of 10 to 30 minutes is sensed.

(g) In the event of power loss to the detector or channel, a continuous call shall be made to the controller.

(h) All circuitry shall be of solid state, digital design and incorporate temperature compensating components, with the exception of the output relay.

(i) If specified, each channel shall have extension and delay timing features, as follows:

(1) Delay timing range from 0 to 30 seconds in 1.0-second increments.

(2) Extension timing range from 0 to 7.5 seconds in a maximum of 0.5-second increments.

(j) The sensing unit shall have a light that will illuminate when a vehicle is within the loop field. Other visual indications of relay closure may be used if approved by the City Traffic Engineer.

(k) Each detector and channel shall be in accordance with NEMA Standard Publication TS.

2911.17 Dual Output Card Rack Detectors: Dual output card rack detectors shall be in accordance with NEMA and shall provide two relay outputs per induction loop detector. One output shall be capable of pulse detection for the purpose of traffic counting, speed and occupancy measurements. The other output shall be capable of presence detection. Each detector output shall be assigned to a separate detector input into the controller.

2911.18 Calling Detector Relay: A calling detector relay shall operate with any detector and allow the detector to place only one actuation when the red indication is being displayed to the associated phase. The relay shall be self-contained.

2911.19 Warranty: All traffic signal controller assemblies, excluding video detection systems, shall be warranted by the manufacturer to be free from defects in workmanship and material for at least one year from the date of project acceptance. Any components found to be defective during the warranty period shall be replaced free of charge. All warranties provided shall be transferred to the City upon project acceptance. Video detection systems shall be warranted in accordance with Section 2912.4.

2912 Detectors:

2912.1 Induction Detector Probes: Detector probes installed under bridge decks shall be protected by completely encapsulating the probe in a conduit system. Probes shall be oriented such that the detection zone is above the bridge deck, and shall be installed in gasketed junction boxes anchored to the bottom of the deck. The junction boxes shall have a minimum size of 6 x 6 x 4 inches and the probes shall be rigidly anchored in the box. The probes shall be no more than 18 inches below the top of the bridge deck. Conduit shall be sized such that the probe and cable can be pulled through the conduit. Any conduit bends shall be such that the probe and cable can be pulled through the bend. External conduit on the structure shall be in accordance with Section 2916.

2912.1.1 The encapsulated induction detector probe shall detect the passage or presence of all vehicles with a standard induction loop detector amplifier. The induction detector probe shall operate in a temperature range from -35 to 165 F with 0 to 100 percent humidity. The operating field intensity range shall be 0.2 to 1.0 oersted with a nominal inductance of 20 micro henries plus 20 micro henries per 100 feet of cable. The nominal direct current resistance shall be 0.5 ohm plus 3.2 ohms per 100 feet of probe cable. Induction detector probes shall be as specified on the Plans and shall meet the following:

(a) The sensing probes shall be cylindrical having maximum dimensions of 7/8-inch diameter by 4 inches long. The sensing probes shall be suitable for installation in a one-inch

diameter bored hole. The interconnecting four-conductor cable and lead-in cable shall be suitable for installation in a 1/4-inch wide pavement sawed slot.

(b) The jacket on the interconnecting cable and the casing on the sensing probe shall be an abrasion resistant polyurethane elastomer. The device shall be impervious to moisture and chemically resistant to all normal motor vehicle petroleum products. Lead-in cables shall be shielded, chemical resistant and completely waterproof.

(c) The combined probe sets, manufacturer specified lead-in cable and detector probe shall detect all vehicles up to a lead-in cable length of 750 feet with up to six probes per set.

(d) The conductor cable from the probes to the detector panel in the controller assembly shall be as specified by the detector manufacturer, shall be continuous and unspliced and shall be a minimum of 50 feet in length. Probes shall be assembled in a set to form a vehicle detector as shown on the Plans. No more than six probes shall be assembled as a set. The cables between probes shall be long enough to provide the spacing shown on the Plans plus 5 feet. If spacing is not shown on the Plans, 15 feet of cable shall be provided between probes. Each set of probes shall have one lead-in cable.

2912.2 Induction Loop Detectors: A slot for the installation of induction loop cable shall be sawed in the pavement as shown on the Plans. Slots shall not be sawed until seven days after placement of Portland cement concrete. Each loop shall have a separate lead-in slot to the conduit. A separate conduit shall be installed between the sawed loop slot and the first pull box for each loop. The conduit opening at the end of the lead-in slot shall be at the bottom of the sawed slot. The slot shall be clean, and free of jagged edges or sharp corners. The cable shall be pushed into the slot without damaging the insulation. After the loop cable is spliced to the lead-in cable, and before the slot is sealed, the resistance of the loop and lead-in cable to ground shall be checked. The resistance test shall be performed by the Contractor in the presence of the City Traffic Engineer, or designee, and documented. After a satisfactory test, showing a resistance no less than 10 mega ohms, the slot shall be sealed. The conduit opening at the end of the lead-in slot and any drilled conduit holes in the pavement shall be sealed with a pliable duct sealant prior to the application of loop sealant. All sawed slots shall then be sealed with an approved detector loop sealant. All detector cable between the loop and detector amplifier shall be twisted at least three turns per foot.

2912.2.1 Induction loop vehicle detectors shall detect a vehicle stopped within the field of the loop or passing over the loop at speeds up to 80 mph. Induction loop detectors shall be card rack mounted. For double controller cabinets, card rack assemblies and detectors shall be installed in the same compartment as each respective associated controller.

2912.3 Microwave and Ultrasonic Detectors: Microwave and ultrasonic detectors shall be mounted at the locations shown on the Plans in accordance with manufacturer's recommendations. All wiring shall be continuous and unspliced from the detector unit to the controller. The Contractor shall make any necessary adjustments for proper operation of the detector.

2912.3.1 The unit shall detect all vehicles moving within the field of detection at speeds from 2 to 80 mph. The unit shall have a minimum detection range from 3 to 200 feet for all vehicles. The pattern spread of the detection field shall be no more than 16 degrees. The unit shall be self-tuning and capable of continuous operation over a temperature range of -35 to 165 F. The unit shall be microprocessor based using Doppler microwave at an operating frequency of 10.525 GHz. The unit shall have FCC certification and shall be tested to the applicable FCC specifications. The unit shall be capable of side-fire mount or overhead mount. The enclosure shall be constructed of aluminum or stainless steel and shall be water resistant. The unit shall be

capable of detecting directional traffic and the direction shall be user selectable. All user operated controls and adjustments shall be clearly marked and easily accessible. The unit shall have a relay detection output to the controller with a minimum 5-amp rating and shall be designed to place a constant call to the controller in the event of any failure. The unit shall have an easily accessible indicator showing activation of detection relay. Required wiring shall be as specified by the manufacturer. Mounting hardware for the type of mounting shown on the Plans and power supply equipment shall be as specified by the manufacturer and shall be provided with the unit.

2912.4 Video Detection Systems: This work shall consist of furnishing, installing and placing into operation a vehicle detection system that detects vehicles by processing video images and providing detection outputs to a traffic signal controller. The system shall include all equipment shown on the Plans and described in these Specifications, and shall include any incidental items necessary for the satisfactory operation and maintenance of the system. The video detection system shall be installed per the manufacturer's recommendations. All cable runs shall be continuous without splice from the cabinet to the camera. If requested by the City Traffic Engineer, a factory certified representative from the supplier shall be available for on-site assistance for a minimum of one day during installation.

2912.4.1 System Requirements: The video detection system shall provide flexible detection zone placement at any location and at any orientation within the combined field of view of the image processors. Preferred presence detector zone configurations shall be a box or lines placed across lanes of traffic or lines placed parallel with lanes of traffic. Detection zones shall be capable of overlapping.

2912.4.1.1 The detection zones shall be created by using a track ball to draw the detection zones on the video image. A graphical user interface shall be built into the automatic control unit (ACU) and displayed on a video monitor or computer. Editing of previously defined detector configurations to fine-tune detection zone placement shall be possible.

2912.4.1.2 When a vehicle is detected by crossing a detection zone, there shall be a visual change on the video display, such as a flashing symbol or a change in color or intensity to verify proper operation of the detection system.

2912.4.1.3 Overall performance of the video detection system shall be comparable to inductive loops. Using camera optics and in the absence of occlusion, the system shall be able to detect vehicle presence with 95 percent accuracy under normal day and night conditions with only slight deterioration in performance under adverse weather conditions, including fog, snow and rain. When visibility exceeds the capabilities of the camera, the system shall default to placing a call on all detectors.

2912.4.1.4 The video detection system shall be programmable via one dial up modem connection at a minimum of 19,200 bytes per second to the camera(s). Still image and real time detection displays to a remote computer using supplied system software through the modem shall be provided.

2912.4.2 System Components: The video detection system will be defined as the complete assembly of all required equipment and components for detection of vehicles. Each system shall consist of the video camera(s), lightning arrester for video cabling, an ACU, a track ball, software and license, if applicable, for system control via a computer, one dial-up modem, 56.6 kilobytes per second maximum connection and V.90 compliant and a monitor. All camera views shall be obtainable without requiring the disconnection and reconnection of cables within the system.

2912.4.2.1 System Software: The system shall include software that detects vehicles in multiple lanes using only the video image. Detection zones shall be defined using a video monitor and a pointing device to place the zones on a video image, which may include a laptop computer. A minimum of 12 detection zones per camera shall be available.

2912.4.2.2 Automatic Control Unit (ACU): The bus connections used to interconnect modules of the ACU shall be gold-plated DIN connectors. Serial communications to a computer shall be through an RS-232/RS-422 serial port. The port shall have the capability to access detection system data as well as the real-time imagery needed to show detector actuations. A subminiature "D" connector on the front of the ACU shall be used for serial communications with a computer running supplied system software.

2912.4.2.2.1 The equipment shall be provided with a NEMA TS1 interface as shown on the Plans. The ACU process unit shall be equipped with a TS1 detector interface for a minimum of 16 detector outputs or 32 detector outputs, if required by specifications. NEMA red/green inputs for each phase shall be available to provide delay/extend functions, either through the detector or the controller. Logic output levels shall be compatible with the TS1. A subminiature "D" connector on the front of the ACU shall be used for interfacing to these outputs.

2912.4.2.2.2 The video detection system shall be provided for either single camera or multiple camera installations as shown on the Plans.

2912.4.2.2.2.1 For single camera installations, the ACU shall have an RS-170 (NTSC) video input to process the camera or any other synchronous video source in real-time. The ACU shall have an RS-170 (NTSC) video output.

2912.4.2.2.2.2 For multiple camera installations, the ACU shall have a minimum of four RS-170 (NTSC) composite video inputs to process the synchronous video cameras or any other synchronous video source in real-time. A fifth video input shall be provided to allow connection of a local surveillance camera or other non-detection video source. The video from the auxiliary input shall not be processed for video detection. The ACU shall have an RS-170 (NTSC) composite video output, which may correspond to any of the video inputs, as selected remotely via RS-232 or locally by front panel switch. Multiple video inputs requiring external cable connections will not be permitted.

2912.4.2.2.3 The ACU or computer shall store a minimum of two separate detection zone configurations. The ACU shall be capable of switching to any of the different detector patterns at the request of the user and shall be a menu selection with a track ball.

2912.4.3 Video Camera and Housing: The video camera shall be mounted according to the Plans. The ACU supplier shall furnish the video camera for traffic detection. The camera shall produce a video image of vehicles under normal roadway lighting conditions regardless of time of day. The video shall produce a clear image for scenes with a luminance from 0.009 to 929 footcandles.

2912.4.3.1 The camera shall provide a minimum resolution of 500 lines horizontal and 350 lines vertical.

2912.4.3.2 The camera shall include an electronic shutter or auto iris control based on average scene luminance and shall be equipped with an auto iris lens.

2912.4.3.3 The camera shall have a variable focal length. The maximum aperture of the lens shall not be smaller than f1.8 and the minimum aperture shall not be larger than f300. The camera shall have a horizontal field of view ranging from a minimum angle of view between 5 degrees and 10 degrees wide to a maximum angle of view 45 degrees or more. The adjustments for focus and focal length shall be made without opening up the camera housing.

2912.4.3.4 The camera shall be contained in an enclosure that is waterproof and dusttight to NEMA-4 specifications. A heater shall be incorporated in the camera to prevent the formation of condensation and to assure proper operation of the lens' iris mechanism. The heater shall not interfere with the operation of the image sensor electronics and shall not cause interference with the video signal. The enclosure shall allow the camera to be rotated in the field during installation.

2912.4.3.5 The housing shall be equipped with a sun shield that prevents sunlight from directly entering the lens. The sun shield shall include a provision for water diversion to prevent water from flowing in the camera field of view.

2912.4.3.6 The total weight of the enclosure, camera, lens, housing, sun shield and mounting bracket shall be less than 10 pounds.

2912.4.4 Cable: Coaxial cable shall be a 75 ohm, precision video cable with 20 AWG solid or stranded bare copper conductor, maximum of 10.1 ohms/m Nom. Direct current resistance, solid polyethylene insulating dielectric, 96 percent minimum tinned copper double-braided shield with a black polyethylene outer covering. The signal attenuation shall not exceed 0.8 decibels per 100 feet at 10 megahertz. Nominal outside diameter shall be a minimum 0.305 inches. The cable shall be in accordance with Belden Type 8281, West Penn P806 or approved equal.

2912.4.4.1 Seventy-five ohm BNC plug connectors shall be used with coaxial cable. The supplier of the video detection system shall approve the coaxial cable, BNC connectors and crimping tool. The manufacturer's instructions shall be followed.

2912.4.4.2 Multi-conductor cable shall be per the manufacturer's recommendations and in accordance with Section 2918.

2912.4.5 Maintenance and Support: The supplier shall maintain an ongoing program of technical support and software updates for the video detection system following expiration of the warranty period. The supplier shall maintain an adequate inventory of parts to support maintenance and repair of the video detection system.

2912.4.6 Warranty of Video Detection System: The video detection system shall be warranted to be free of defects in material and workmanship for a minimum of two years. During the warranty period, technical support from factory certified personnel or factory certified installers shall be available from the supplier. Ongoing software support by the supplier shall include updates for the ACU and computer software and shall be provided at no cost to the City during the warranty period. The update of the ACU software to be National Transportation Communications for ITS Protocol (NTCIP) compliant shall be included.

2912.4.7 Training of Video Detection System: A minimum of one day of training shall be provided in the operation, setup and maintenance of the video detection system.

2912.4.3 Extra Service Outlet: A separate grounded service outlet shall be provided in the controller cabinet for supplying power to the video detection system. Use of the grounded service outlet located on the cabinet door will not be permitted.

2912.4.3 Monitor: The monitor shall be installed to automatically power on when the cabinet door is opened and automatically power off when the cabinet door is closed. A manual on/off switch shall also be provided.

2912.4.3.1 The monitor shall have a 9-inch screen, an NTSC-M system and BNC video in-out connections.

2912.5 Detector Loop Sealant: Loop sealant shall be proportioned, mixed and installed per the manufacturer's specifications and recommendations. After the loop slots are cut into the pavement, the surface shall be thoroughly cleaned, and all loose debris shall be removed. After application of the sealant, the roadway shall be tack-free and capable of being open to the motoring public within four hours without tracking. Loop sealant shall fully encapsulate the loop wires as shown on the Plans. Backer rods shall be placed to ensure one-inch depth coverage of loops. Excessive overfill will not be permitted.

2912.5.1 Loop sealant shall have the following minimum characteristics:

(a) The loop sealant used to fill the saw cuts and other gaps shall be of a type intended for and designed to be used as traffic loop embedding. The sealant shall be designed for installation when the surface temperature of the roadway is between 40 and 120 F and exhibit minimal shrinkage and stringing during and after installation. The curing time of the sealant shall be a maximum of 72 hours. Cured sealant shall retain permanent flexibility to 0 F, be temperature stable and ensure the integrity of the loop detector installation from -40 to 200 F. The loop sealant shall adhere to the roadway pavement and resist the effects of weather, including freeze-thaw cycles, de-icing chemicals, salts, gasoline and motor oils, such that the operation of the detector is not affected.

(b) The three types of allowable loop sealant will be two-part polyester resin, one-part moisture curing polyurethane and hot-melt bituminous.

(c) The loop sealant shall provide a minimum shelf life of nine months. Prior to the installation of any detector loop sealant, the MSDS or an OSHA Form 20 along with the manufacturer's technical data sheet, shall be submitted to the City Traffic Engineer. Any sealant used on loop detectors shall meet the approval of the City Traffic Engineer.

2912.6 Pedestrian Push Buttons: Pedestrian push buttons shall be direct push contact type. Each push button shall be a removable contact assembly mounted in a durable natural aluminum cast finished case, black in color. The housing shall be shaped to fit the curvature of the pole to which it is attached and shall provide a rigid installation. Contacts shall be normally open, entirely insulated from the case and operating button, and have connecting terminals. The operating button shall be recessed and made of brass or other corrosion resistant metal alloy or non-metallic material and shall be sturdy. The operating voltage shall not exceed 24 volts. The entire assembly shall be waterproof, secure against electrical shock to the user, and of such construction as to withstand continuous hard usage. The pedestrian push button shall be mounted directly to the pole with a watertight assembly with no external pipe or mounting hardware and shall be the large button type meeting ADA requirements.

2913 Emergency Preemption: The Contractor shall furnish and install Opticom emergency preemption equipment as shown on the Plans. Opticom equipment shall be mounted inside the controller cabinet, no housing boxes outside of the cabinet will be allowed. The cable shall be run

continuous from the detector to the controller cabinet with no splices. The detector shall be installed as shown on the Plans or as approved by the City Traffic Engineer. The Contractor shall be responsible for the proper alignment of the detector to ensure maximum detection time for the emergency preemption equipment.

2914 Pull and Junction Boxes: Pull and junction boxes shall be installed as shown on the Plans. Pull boxes placed in traveled ways, auxiliary lanes, shoulders and low profile islands shall be concrete. Pull boxes may be cast-in-place concrete, precast concrete, preformed polymer concrete or preformed fiberglass reinforced polymer concrete. Pull box dimensions shall be as shown on the Plans. Each pull box shall be equipped with cable hooks as shown on the Plans. Cable hooks shall be galvanized steel or brass with a minimum diameter of 3/8 inch and a minimum length of 5 inches.

2914.1 Conduit shall enter the pull box in the side of the box and shall extend a minimum of 2 inches and a maximum of 4 inches as shown on the Plans. Conduit shall enter from the direction of the run. If it becomes necessary to increase the excavation depth and extend the pull box, no direct payment will be made. The excavated opening outside the pull box shall be wide enough to allow compaction of the backfill material. Cinders, broken concrete, broken rock or other hard or undesirable material shall not be used for backfilling. The backfill material shall be placed in layers not to exceed 6 inches deep, and each layer shall be thoroughly compacted before the next layer is placed. Where preformed pull boxes are used, the holes for the conduit shall be drilled as recommended by the manufacturer. The holes shall be round and no more than 1/2 inch larger than the conduit.

2914.3 A pull box placed in an unpaved area shall have a concrete pad around the perimeter as shown on the Plans. Concrete pads will not be required for pull boxes installed in concrete. Pull boxes shall not be installed in sidewalk ramps. Concrete for the pad shall be a KCMMB 4k psi, or higher, approved concrete mix. The top surface of all pull boxes shall be flush with surfaced areas and approximately one inch above earth or sodded areas.

2914.4 If preformed pull boxes are specified, the Contractor may use standard concrete pull boxes in lieu of the Class 1 or 2 preformed pull boxes, or the Type A double concrete pull box in lieu of the Class 3 preformed pull boxes. For installations requiring different voltages for lighting and signal applications, the Type B double concrete pull box may be used in lieu of two preformed pull boxes at the Contractor's expense. If the Type B double concrete pull box is specified, no substitutions will be permitted.

2914.5 Class 5 preformed pull boxes shall be in accordance with all requirements in the contract documents. Installation of Class 5 pull boxes shall be as shown on the Plans and in accordance with the manufacturer's recommendations.

2914.6 Pull boxes with covers exceeding 36-inches in length shall be split lid Class 3.

2914.7 Cast-in-place concrete pull boxes shall be constructed using a KCMMB 4k psi, or higher, approved concrete mix. Concrete construction shall be in accordance with ACI 301 Standard Specifications for Structural Concrete. Pull boxes shall be cast in a neat and workmanlike manner. Forms will be required for the inside surfaces of the pull box walls; and if the excavation is irregular, forms will also be required for the outside surfaces of the walls. An outside form shall be installed across all trenches leading into the pull box excavation. The ends of all conduits through the walls shall fit tightly against the form.

2914.8 Precast concrete pull boxes shall be constructed using a KCMMB 3k psi, or higher, approved concrete mix. Concrete construction shall be in accordance with ACI 301 Standard Specifications for Structural Concrete.

2914.9 Preformed pull boxes shall withstand a wheel load of 20,000 pounds. Pull box walls may be either flared or vertical. Pull boxes shall have a collar or ring at the top that will allow for securing the concrete apron. Metal conduit, if used in preformed pull boxes, shall be electrically bonded to one another inside each pull box.

2914.10 Pull Box Covers: Each pull box shall be equipped with a bolt down cover. The threaded hole that receives the cover lock-down bolt shall be open at the bottom to allow the cleanout of sand, dirt and other debris. Lock-down bolts shall be stainless steel or brass with a hex-head. Frames and covers for cast-in-place and precast concrete pull boxes shall be cast iron in accordance with AASHTO M 105, Class 30, and shall be of the dimensions and weights shown on the Plans. Preformed pull box covers shall be polymer concrete and shall have a minimum wheel load rating of 20,000 pounds. A lift opening shall be provided on all covers. Covers for pull boxes to be used for traffic signals, or a combination of traffic signals and street lighting, shall be embossed with "TRAFFIC SIGNALS". Covers for pull boxes to be used for fiber optics shall be embossed with “FIBER OPTICS”.

2914.11 Metal Junction Boxes (Power): Metal Junction boxes shall be flanged and designed for flush mounting if encased in concrete, or designed for surface mounting if external mounting is specified. Metal junction boxes shall be drilled or tapped for all conduit connections. Metal junction boxes shall be installed such that covers are removable. Metal junction boxes shall be stainless steel, watertight NEMA 4 enclosures. Metal junction boxes shall be in accordance with the following minimum sizes unless otherwise specified:

Maximum Entering Conduit Size, Inches	Minimum Box Size, Inches
2	(L)12 x (W)12 x(D) 4
4	(L)16 x (W)12 x (D)6

2914.11.1 PVC and metal conduit shall be joined to metal junction boxes to make a rigid and waterproof connection. If metal conduit is used, an insulated bushing shall be provided at the end of the metal conduit on the inside of the junction box to prevent scuffing of the cable insulation.

2914.11.2 The metal junction box cover shall be made watertight with a suitable gasket and secured with stainless steel or cadmium plated screws or bolts.

2915 Concrete Bases: Excavation for bases shall be made in a neat and workmanlike manner. While concrete is being placed, forms shall be level and sufficiently rigid to prevent warping or deflection. Concrete shall be a KCMMB 4k psi, or higher, approved concrete mix. Conduit and anchor bolts shall be held rigidly in place before and during concrete placement. Tops of all bases shall be finished level and the perimeter edged to a radius of 1/2 inch. Exposed surfaces of bases shall be finished in a workmanlike manner as soon as practical after removing forms. Concrete construction shall be in accordance with ACI 301 Standard Specifications for Structural Concrete.

2915.1 Pole Bases: Concrete bases for poles shall be in accordance with the dimensions shown on the Plans. Metal forms no less than 26 inches high shall be used for all Type A bases. The top 12 inches of Type B bases shall be formed. Reinforcing steel for concrete bases shall be in accordance with Section 2906.5. Anchor bolts for steel poles and mast arms shall be as shown on the fabricator’s approved shop drawings. Conduit shall extend above all pole bases a nominal 4

inches and be covered prior to pouring concrete. All threaded portions of anchor bolts shall be taped during the concrete pour. Any concrete splashed on poles when pouring shall be cleaned off.

2915.2 Controller and Power Supply Bases: Concrete bases for controllers and power supplies shall be constructed as shown on the Plans. Aprons will be considered part of the controller base. A minimum of four anchor bolts shall be used for single controller cabinets and a minimum of six anchor bolts shall be used for double controller cabinets. The size of anchor bolts for controller cabinets shall be as specified by the cabinet manufacturer. A ground rod shall be placed into the ground with a minimum of 8 feet of earth contact as shown on the Plans. Ground rods shall not be in concrete. Conduit shall extend above all controller bases no more than one inch. Bases for double controller cabinets shall have multiple conduits to the first pull box, with a minimum of one positioned in each compartment. All conduit openings in the controller cabinet or controller cabinet base shall be sealed with a pliable duct sealant after wiring is completed. The sealant shall be readily workable, soft, sealing compound. The compound shall be workable at 30 F and shall not melt or run at temperatures up to 175 F.

2916 Conduit Systems: The location and type of conduit shall be as shown on the Plans or Standard Drawings. The Contractor may furnish and install polyvinyl chloride (PVC), or high-density polyethylene (HDPE) conduit for the distribution system. Galvanized Rigid Steel (GRS) conduit shall be used where conduit is to be installed externally on a structure. It shall be the privilege of the Contractor, at his own expense, to use larger size conduit if desired, as approved by the City Traffic Engineer. Where larger size conduit is used, it shall be for the entire length of the run from outlet to outlet. No reducing couplings will be permitted. No additional payment will be made for larger conduit.

2916.1 Polyvinyl Chloride (PVC): Rigid non-metallic conduit shall be polyvinyl chloride (PVC), Schedule 40 or Schedule 80, and shall conform to NEMA Standard TC-2 and NEMA TC-3. The conduit shall bear an Underwriters' Laboratories (U.L.) label and shall conform to Federal Specification WC-1094A (latest version). The conduit shall be clearly and durably marked at least every 10 feet with the material designation, nominal duct size, and the name and/or trademark of the manufacturer. Fittings for PVC conduit shall be in accordance with U.L. 514. Cement used for the fittings shall be in accordance with the conduit manufacturer's recommendations. Conduit, fittings, and cement shall be supplied by the same manufacturer.

2916.2 High Density Polyethylene (HDPE): Flexible non-metallic conduit shall be high-density polyethylene conduit (HDPE). The conduit shall be smooth walled inside and out, and shall be gray in color. The conduit shall be a plastic duct which is intended for underground use and which can be manufactured and coiled or reeled in continuous transportable lengths and uncoiled for further processing and/or installation without adversely affecting its properties of performance. The conduit shall be manufactured to NEMA Standard TC-7 and ASTM D 3035 SDR11 specifications. The conduit shall be clearly and durably marked at least every 10 feet with the material designation, nominal duct size, and the name and/or trademark of the manufacturer. An approved factory coupling shall be used for connection of the HDPE conduit to a 90° factory PVC elbow or between two lengths of HDPE conduit. The coupling shall be of high-density polyethylene. Fittings for HDPE conduit shall be in accordance with ASTM D 2683. Epoxy used for the fittings shall be in accordance with the conduit manufacturer's recommendations.

2916.3 Galvanized Rigid Steel (GRS): Galvanized rigid steel conduit shall be shall be in accordance with ANSI C80.1. GRS conduit shall be galvanized on both the inside and the outside surfaces. The weight (mass) of zinc coating shall be no less than 0.5 ounce per square foot

of coated surface, as determined in accordance with AASHTO T 65. The interior or exterior surface, or both, may be given a coating of suitable material to facilitate installation of wires and cables and to permit the conduit to be readily distinguished from pipe used for purposes other than electrical. All metal conduit ends shall be provided with a bushing to protect the cable from abrasion. Fittings shall be in accordance with ANSI C80.4. A sufficient number of conduit hangers shall be supplied to attach the GRS conduit to the structure, as recommended by the manufacturer. One (1) No. 6 AWG, bare copper ground wire shall be attached to each end of the GRS conduit with a grounding bushing. The ground wire shall be connected to a ground rod at each end of a GRS conduit run, or extended to an adjacent GRS conduit or ground rod.

2916.4 Conduit Installation: Conduit shall be bored under pavement. Wherever a conduit passes beneath a curbed street, aluminum conduit markers shall be installed in the curb immediately over the conduit location. Conduit markers shall be furnished by the Contractor as detailed in the Standard Drawings and shall be installed in the top of the curb by drilling the curb and epoxying the conduit marker in place. Conduit markers are subsidiary to the installation of conduit.

2916.4.1 The ends of all conduits shall be well-reamed to remove burrs and rough edges. All conduits shall be cleaned and swabbed prior to installation of cable. Field cuts shall be made square and true so that the ends will butt or come together for the full diameter thereof. The end of each conduit run shall be covered to prevent water or debris from entering the conduit while the system is being constructed. Existing underground conduit to be incorporated into a new system and GRS conduits shall be cleaned with a mandrel and blown out with compressed air.

2916.4.2 An approved factory coupling shall be used for connection of the HDPE conduit to a 90° factory PVC elbow or between two lengths of HDPE conduit. The coupling shall be of high density polyethylene material. The coupling shall provide an airtight and watertight lock.

2916.4.3 Conduit bends, except factory bends, shall have a radius of not less than six times the inside diameter of the conduit. Where factory bends are not used, conduit bends shall be made without crimping or flattening, using the longest radius practicable and utilizing an appropriate conduit bending tool.

2916.4.4 The conduit shall be installed continuous from outlet to outlet or as otherwise shown on the Plans. With respect to HDPE conduit, no couplings or joints will be allowed at intermediate points unless approved by the City Traffic Engineer. The conduit may be directional bored to minimize disruption to the existing improvements or may be plowed or trenched. Conduit shall be installed under pavement sections at a depth not less than 24 inches (24”); and where laid in trenches in unpaved areas, conduit shall be laid to a depth of 24 to 36 inches (24” to 36”) below natural ground level or finish grade.

2916.4.5 At all outlets, conduit shall enter from the direction of the run. Where conduit enters a pull or junction box the side of the box shall be drilled per the manufacturer’s recommendations. The hole shall be no more than one-half inch (½”) larger than the conduit. The gap between the box and conduit shall be filled with sealing compound.

2916.5 Trenching: Conduit may be installed by trenching in unpaved areas. Trenches shall be excavated to a maximum width of six inches (6”) and deep enough to provide the minimum cover for conduits as shown in the Standard Drawings. Conduit shall be allowed to "snake" in the trench, but there shall be no sharp bends and if two or more conduits are placed in a common trench, the conduits shall not cross each other. If the bottom of the trench is in rock or rocky soil, the conduit shall be placed on a six inch (6") protective layer of clean, tamped backfill material.

Trenches shall be backfilled as soon as practical after the installation of conduit, but after inspection of the trench by the City Engineer or designee. Backfill material installed within six inches (6”) of the conduit shall be free of rock or other solid material that might cause mechanical damage to conduit. The backfill material shall be placed in layers not to exceed 6 inches (6”) deep, and each layer shall be thoroughly compacted to the approximate density of the adjacent material before the next layer is placed. Red burial tape imprinted with "CAUTION - BURIED CABLE BELOW" shall be installed in all trenches at approximately 1/3 to 1/2 of the depth of the trench. The four to six inches (4” to 6”) of backfill material directly below finished grade shall be topsoil. All disturbed areas shall be restored to the satisfaction of the City Inspector.

2916.6 Plowing: Conduit may be installed by plowing in unpaved areas. The equipment used for plowing conduit is designed specifically for that purpose with the power and versatility to easily and accurately bury the various sizes of conduit under all normal soil conditions. This equipment places the conduit without twisting, kinking, or damaging the material in any way. The vibrating unit shall be attached to a tractor unit in such a manner that the tractor does not dampen the vibration. The cable way and guides shall be smooth, free of obstructions and sharp edges and shall not cause bending of the conduit at shorter than the minimum bending radius recommended by the manufacturer, nor cause excessive strain to the conduit. Conduit reels may be mounted on the tractor or conduit unreeled along the proposed route before plowing in such a manner to allow as direct a line as possible to the trench to avoid unnecessary bending of the conduit or rubbing of the conduit against the reel. The plow shall not be backed onto the conduit. If an underground obstruction is encountered, the plow shall be lifted out of the ground and the obstruction removed. Conduit may be installed utilizing the pull plow method if approved by the City Engineer. After installation of conduit by plowing, the disturbed earth shall be leveled and, if necessary, compacted by a device approved by the City Engineer. Ends of conduit shall be capped immediately after cutting to prevent moisture and debris from entering the conduit. Red burial tape imprinted with "CAUTION - BURIED CABLE BELOW" shall be installed in all trenches at approximately 1/3 to 1/2 of the depth of the trench. All disturbed areas shall be restored to the satisfaction of the City Inspector.

2916.7 Boring: Pavement shall not be disturbed without the written permission of the City Engineer and then only in the event insurmountable obstructions are encountered. Conduit shall be placed under existing pavement by boring. The Contractor shall complete the boring as to maintain minimum permissible clear distances, both horizontally and vertically, from all underground utilities. Boring pits shall be kept two feet (2’) clear of the edge of any type of pavement wherever possible. Boring alignment shall be perpendicular to the curb line in order to achieve the shortest possible crossing distance. Excessive use of water such that pavement might be undermined or subgrade softened, will not be permitted. The Contractor shall at all times and for the entire length of the boring alignment be able to demonstrate the horizontal and vertical position of the alignment. All disturbed areas shall be restored to the satisfaction of the City Inspector. Boring may be used instead of trenching at all other locations at the Contractors expense.

2916.8 External Conduit on Structure: GRS conduit shall be used when conduit is to be installed externally on structures. Conduit on structures will include conduit on bridges, retaining walls or other structures, and shall be installed as shown on the Plans or as directed by the City Engineer or designee. The final location of all conduit and junction boxes shall be approved by the City Engineer before installation begins. Conduit shall not be attached to prestressed concrete girders or prestressed, precast concrete deck panels. The conduit shall be secured to the concrete with clamps at no more than 5-foot intervals. Concrete anchors shall be in accordance with federal specification FF-S-325, Group II, Type 4, Class I, and shall be galvanized in accordance

with ASTM A 153, B 695-91 Class 50, or constructed of stainless steel. The minimum embedment in concrete shall be 1 3/4 inches. If it is necessary to anchor the conduit to steel bridge members, the attachment method shall not involve drilling, grinding or welding. Attachment method to steel members shall be approved by the City Engineer. Expansion fittings shall be installed at each end of a bridge and each location where the conduit crosses a bridge expansion joint. The expansion fitting shall provide a minimum movement in either direction as shown on the Plans or as specified by the City Engineer. Clamps, concrete anchors, expansion fittings, and any hardware or material required for conduit installation on structures shall be at the Contractor's expense.

2916.9 Ground Wire Installation: A bare No. 6 AWG stranded copper ground wire shall be installed in each conduit and attached to the ground lug in signal poles, except as otherwise specified in this section. All bare ground wires shall be electrically bonded by means of a clamp or crimp type connection. All bare ground wires in the controller base shall be electrically bonded to the power company ground. Conduit containing only fiber optic cable shall contain a bare or green-jacketed No. 14 AWG stranded copper tracer wire instead of a bare No. 6 AWG copper ground wire. Tracer wire shall not be pulled into the controller cabinet or bases. An additional 6 feet of tracer wire shall be coiled in each pull box through which the fiber optic cable passes. Tracer wire in pull boxes shall be capped, not electrically bonded to any ground wires labeled "TRACER" and tagged in accordance with Sec 2917. Ground wire and tracer wire shall be at the Contractor's expense.

2916.10 Certification: The Contractor shall furnish a manufacturer's certification that the material supplied is in accordance with all requirements. If requested by the City City Traffic Engineer, the Contractor shall also furnish typical test results representative of the material.

2917 Pole Erection: Pole bases shall be securely anchored to concrete bases. Pedestal poles shall be erected vertically without the use of leveling nuts. Metal poles for span wire and cantilever mast arms shall be adjusted by leveling nuts. All poles for span wire and cantilever mast arms shall be raked as directed by the City Traffic Engineer.

2918 Wiring: Installation of wiring shall be in accordance with the Plans and Specifications and appropriate articles of the NEC. Electrical conductors and associated equipment shall be in accordance with applicable requirements of ICEA, IMSA, NEMA, RETMA, NEC, NFPA and regulations of the National Board of Fire Underwriters and shall meet the approval of the City Traffic Engineer. Contractor furnished equipment that will become the property of the City shall be of new stock unless stated otherwise in the Plans.

2918.1 Except as noted, all conductors shall be soft drawn, Class B or C stranded copper wire in accordance with ICEA S-6-402, Part 2. Solid conductors may be used only for grounding where connected to a ground rod.

2918.2 All cable runs, with the exception of street lighting cable, shall be continuous and unspliced from the connections in the terminal block of the signal head to the terminal strip in the controller cabinet, from the signal terminal block to another signal terminal block or as shown on the Plans. When a terminal compartment is provided, all cable runs shall be continuous from the terminal compartment to the terminal strip in the controller cabinet. When parallel connections are required from an overhead signal head on a mast arm to a side-mounted signal head, cable shall be routed from the controller to the terminal compartment of the signal on the mast arm and then parallel-circuited back to the side mounted signal. All other conductor cable combinations to signal heads shall be as shown on the Plans or as directed by the City Traffic Engineer. Where

double controller cabinets are specified, wires shall be sorted between the controllers and first pull box such that field wires enter the associated controller compartment. All cables shall be supported within the pole at the mast arm connection using cable hooks so that the cables do not rest on the mast arm connection.

2918.2.1 Multi-conductor cable for traffic signals shall be No. 14 AWG, rated at 600 volts. The cable shall be in accordance with IMSA Specification No. 19-1.

2918.3 Power cable runs shall be continuous and unspliced from the power disconnect switch located on the power supply to controller cabinet terminals. Power cable shall be encased in conduit of the size shown on the Plans. Energized power cables shall run to circuit breakers. The neutral cable shall be terminated on the ground bus bar in the controller cabinet.

2918.3.1 The voltage rating for high voltage power cable supplying primary electrical power shall be 5 KV for primary voltages less than 5000 volts, and 15 KV for voltages of 5000 volts and greater. The specific type of cable shall be as recommended and approved by the utility company or municipality supplying power.

2918.3.2 Low voltage power cable shall be 600-volt, single conductor cable and thermoplastic or thermosetting polyethylene insulated. All cable shall be plainly marked on the outside with the manufacturer's name and identification in accordance with industry practice. Insulation type shall be THW, RHH, RHW, RHW-2 or USE. Average thickness of insulation shall be no less than specified in the following table, with a minimum thickness of 90 percent thereof.

AWG No.	Thickness, Mils
14-10	45
8-2	60
1-4/0	80
213-500	95
501-1000	110

2918.3.3 Cable-conduit shall consist of one to four low voltage power cables with an insulated sized electrical neutral and a bare safety ground, factory installed in black polyethylene conduit intended for direct burial. The conduit shall be plainly marked on the outside with manufacturer's name and identification in accordance with industry practice and shall be in accordance with ASTM D 3485. Cable-conduit shall be accompanied by the manufacturer's certification stating the conduit is in accordance with the requirements of this specification.

2918.4 Where luminaires are required, they may be connected to a street lighting system or they may be powered from the traffic signal power supply. Lighting cables shall not run through the traffic signal controller. Cables can be run through signal conduits and pull boxes. Lighting cable may be spliced in pull boxes using copper type K split bolt connectors. All splices shall be protected with a waterproof resin splice kit installed in accordance with the manufacturer's recommendations.

2918.4.1 All lighting cables that are to be installed underground must meet the requirements for low voltage power cables. Break-away connectors are not required to be installed in traffic signal poles.

2918.5 Induction loop dimensions shall be as shown on the Plans. All loop conductors shall be wound in the same direction with the start and end clearly marked on the conductors at the junction box or pull box. The City Traffic Engineer or designee will determine the exact location of loops. When construction of a loop is started, it shall be completed the same construction day. Should the Contractor start a loop installation and fail to satisfactorily complete it, the entire loop may be subject to replacement at the discretion of the City Traffic Engineer. Construction of loops shall only be started when the ambient air temperature is 40 degrees F and rising. Wire shall be installed so as to minimize stress at corner locations. Wire shall be kept dry when installing in the saw slot and shall be inserted by use of a blunt, preferably nonmetallic, flat paddle. Each induction loop shall be connected to the detector by a separate lead-in cable. Single-conductor No. 14 AWG cable shown on the Plans is an approximation of cable quantity required to construct the induction loop. If the number of turns shown on the Plans is not in accordance with the manufacturer's recommendation for the sensing units furnished, the Plans will be revised, and the induction loop cable will be field measured and quantities adjusted accordingly. Induction loop detector cable shall be installed in accordance with manufacturer's recommendations. Induction loop detector lead-in cable will be shown on the Plans as two-conductor No. 14 AWG cable. Should the manufacturer recommend a different type of cable, the two-conductor cable shall be revised to the manufacturer's specification, but will be considered completely covered by the contract unit price for loop detector lead-in cable. Cable for loop detectors shall be continuous from the terminal strip in the controller cabinet to a splice with the detector leads in the pull box adjacent to the detector. The conductor splice shall be soldered without an open flame. The soldered splice shall then be capped and inserted into a direct buried splice kit.

2918.5.1 Induction loop detector cable shall be single conductor No. 14 AWG wire, with Type XHHW insulation, marked as such, rated at 600 volts. The cable shall be in accordance with IMSA Specification No. 51-7.

2918.5.2 Lead-in cable used between the loop detector and the controller shall be two-conductor, twisted, shielded No. 14 AWG wire rated at 600 volts. The cable shall be in accordance with IMSA Specification No. 50-2.

2918.6 Where practical, color codes shall be followed according to the following tables for each type of multi-conductor cable:

2 – Conductor (Pedestrian Push Button)	Terminal
Black	Push Button Actuation
White	Neutral

5 – Conductor (Pedestrian Head)	Terminal
Red	Don’t Walk Indication
Orange	N/A
Green (or Brown)	Walk Indication
Black	N/A
White	Neutral

7 – Conductor (3 Section & 5 Section Head)	Terminal
Red	Red Ball Indication
Orange	Yellow Ball Indication
Green (or Brown)	Green Ball Indication
Blue	Green Arrow Indication
Black	Yellow Arrow Indication
White	Neutral
White With Black Trace	Neutral for Arrow Indications

Circuits shall be properly labeled in the controller cabinet and all pull boxes by means of round aluminum identification tags with a minimum thickness of 0.1 mils, attached to the cables with a copper wire. Information stamped on the tags shall identify equipment served by the conductor cable in accordance with designations used on the Plans.

2918.7 Cables shall be pulled through conduit by a cable grip providing a firm hold on exterior coverings. Cable shall be pulled with a minimum of dragging on the ground or pavement. Frame-mounted pulleys or other suitable devices shall be used for pulling cables out of conduit into pull boxes. Lubricants may be used to facilitate pulling cable. Polyester rope will not be permitted to facilitate pulling of cable. Slack in each cable shall be provided by a 6-foot loop coiled in each pull box and a 3-foot loop coiled in each junction box. All signal poles and controllers shall be grounded by bare No. 6 AWG stranded copper wire.

2918.8 Certification. All cables and conductors shall be accompanied by certification from the supplier indicating: (1) the supplier is familiar with the requirements of these Specifications and, (2) cable furnished was from a lot manufactured by (manufacturer's name) whose test results are in accordance with these Specifications.

2919 Test Equipment: During installation of equipment and material, the Contractor shall furnish to the City Traffic Engineer suitable equipment to test all or part of the completed facility to establish compliance with requirements of the contract. Minimum test equipment shall be a voltmeter, ohmmeter and ammeter. For testing induction loop detectors, the Contractor shall also provide a suitable 500-volt, direct current, 0 to 100- mega ohm range, hand-operated, resistance measuring device.

2920 Test Period: After the project is open to normal traffic, the Contractor shall notify the City Traffic Engineer in writing the date the signal or signal system will be ready for testing. Upon concurrence from the City Traffic Engineer, the Contractor shall place the signal or signal system in operation for a 15 consecutive day test period. The signal turn-on shall be performed by the Contractor, City personnel shall be present at the activation. The signal turn-on shall not occur on Fridays, holiday or weekends and shall be completed between the hours of 9:00 a.m. and 2:00 p.m., unless otherwise noted in the Plans or directed by the City Traffic Engineer. At locations without previous traffic signal control, the new traffic signal shall flash for a period of five business days prior to full signal system turn-on. A signal operated independently of other signals or signal systems shall be tested as a single installation. A signal operated as part of a system shall not be tested until all signals in the system are ready to be tested. A system shall be tested as a unit. Any failure or malfunction of equipment during the test period shall be corrected at the Contractor's expense, and the signal or signal system tested for an additional 15 consecutive day period. This procedure shall be repeated until the signal equipment has operated to the City Traffic Engineer's satisfaction for 15 consecutive days. The Contractor shall, in the presence of

the City Traffic Engineer or designee, demonstrate the proper action of the controller's monitor as part of the testing system, if applicable.

2920.1 When the test period is initiated and until the test period is completed, following the turn on of temporary traffic signals or after work is begun on an existing signal installation, the Contractor shall provide at least one service technician to remain in the area and be available for day, night and weekend trouble calls. The Contractor shall furnish the name, address and telephone number where each designated technician can be reached at all times. In the event of a malfunction, the Contractor shall provide adequate traffic control for the intersection until the signals are restored to normal operation. Adequate traffic control shall be as shown on the Plans or as directed by the City Traffic Engineer. If the signal or signal system malfunctions and a designated technician cannot be reached or cannot arrive at the intersection in a reasonable time in the judgment of the City Traffic Engineer, then the City Traffic Engineer may exercise the option to direct City personnel or a third party to correct the malfunction in the presence of the City Traffic Engineer or designee. If this option is invoked, the entire cost of the work performed by City personnel or the third party will be computed and deducted from the payments due the Contractor.

2920.2 Whether or not the City Traffic Engineer elects to correct the signal malfunction, nothing in this specification shall be construed or interpreted to relieve the Contractor of any liability for personal injury or property damage that results either directly or indirectly from a signal malfunction during the test period. The Contractor and surety shall indemnify and save harmless the City, the City’s agents, employees and assigns for any legal liability incurred for such a signal malfunction.

2921 Maintenance Information: Before acceptance of the work, the Contractor shall furnish the City Traffic Engineer with three copies of the manufacturer's instructions for maintenance and operation of all signal equipment including, but not limited to, controllers, conflict monitors, load switches, detectors, software, interconnect and auxiliary equipment. At a minimum, the manufacturer's instructions shall include organized written instructions, wiring diagrams, diagrams showing component layouts and parts lists with part numbers and serial numbers, where applicable. Serial numbers listed by the supplier will be verified with the shipping invoice and on the controller and conflict monitor received for installation. The Contractor shall furnish three copies of wiring diagrams of the installation or system. The cabinet wiring diagrams shall include labeling for all field terminal connections and shall provide an orientation of the terminal layout that conforms to the intersection information specified.

2921.1 Prior to acceptance of the work, the Contractor shall submit marked-up plans showing in detail all construction changes, especially the location and depth of conduit.

2921.2 The Contractor is responsible for making all repairs and replacements, including downed poles, damaged or cut cables, and burnt out indications, to the traffic signal system, regardless of the cause or responsible party, until the entire system is completed, inspected, and accepted as substantially complete by the City.

2922 Final Clean Up: .Before final acceptance, the Contractor shall restore to a condition equal to or better than that existing prior to construction, for all property, both public and private, within, adjacent to and beyond the limits of construction that have been disturbed or damaged while executing the work. This includes, but not limited to, existing curb and gutter, sidewalk, pavement, drainage structures, irrigation systems, street lighting and traffic signal equipment. All unpaved areas damaged during construction shall be restored to the original condition. Unless

otherwise directed, grassy areas which were originally sodded shall be re-sodded. Restoration work shall be at the Contractor's expense. All restoration work shall be acceptable to the City Inspector.

2923 Measurement and Payment: See Division I – General Requirements for CIP, Section 01120.

SECTION 3000 –TRAFFIC CONTROL

CITY OF LEES SUMMIT, MISSOURI
STANDARD SPECIFICATIONS

TABLE OF CONTENTS

3011 SIGNING GENERAL 4
3011.1 Scope 4
3011.2 Codes and Standards 4
3011.3 Modification of Specifications 4
3011.4 Incidental Work and Parts 4
3011.5 Existing Signing 4
3011.6 Permits and Inspections 4
3011.7 Maintenance Work 4

3012 SIGNING MATERIALS AND EQUIPMENT 5
3012.1 Scope 5
3012.2 Sign Blanks 5
3012.3 Sign Sheeting 5
3012.4 Sign Posts 5
3012.4.1 Square Steel Posts 5
3012.4.2 Decorative Posts 5
3012.4.3 U-Steel Posts 5
3012.5 Sign Mounting Hardware 6

3013 SIGNING CONSTRUCTION REQUIREMENTS 6
3013.1 Scope 6
3013.2 Sign Post Installation 6
3013.3 Storage of Signs 6
3013.4 Sign Installation 6
3013.5 Removal and Reinstallation of Existing Signs 7
3013.6 Final Clean Up 7

3014 SIGNING MEASUREMENT AND PAYMENT 7

3021 PAVEMENT MARKING GENERAL 7
3021.1 Scope 7
3021.2 Codes and Standards 7
3021.3 Modification of Specifications 7
3021.4 Incidental Work and Parts 7
3021.5 Integrity of Design and Installation Standards 8
3021.6 Permits and Inspections 8
3021.7 Warranty 8

3021.8 Property Damage 8

3022 PAVEMENT MARKING MATERIALS AND EQUIPMENT 8
3022.1 Scope 8
3022.2 Material Selection 8
3022.3 High-Build Paint 9
3022.4 Pre-Formed Thermoplastic 10
3022.5 Thermoplastic 11
3022.6 Urethane 11
3022.7 Drop-On Glass Beads 13

3023 PAVEMENT MARKING CONSTRUCTION REQUIREMENTS 13
3023.1 Scope 13
3023.2 Surface Preparation 13
3023.3 Weather Limitations 13
3023.4 High-Build Paint Application 13
3023.5 Pre-Formed Thermoplastic Application 14
3023.6 Thermoplastic Application 14
3023.7 Urethane Application 15
3023.8 Pavement Marking Removal 15
3023.9 Deficiencies 15
3023.10 Final Clean Up 16

3024 PAVEMENT MARKING MEASUREMENT AND PAYMENT 16

3031 TEMPORARY TRAFFIC CONTROL GENERAL 16
3031.1 Scope 16
3031.2 Codes and Standards 16
3031.3 Modification of Specifications 16
3031.4 Traffic Control Plans 16
3031.5 Minimum Requirements 17
3031.6 Incidental Work and Parts 17
3031.7 Permits and Inspections 17

3032 TEMPORARY TRAFFIC CONTROL MATERIALS AND EQUIPMENT 17
3032.1 Scope 17
3032.2 Construction Signs 17
3032.3 Channelizers 17
3032.4 Barricades 18
3032.5 Arrow Panels 18
3032.6 Warning lights 18
3032.7 Temporary Pavement Markings 18
3032.8 Portable Changeable Message Boards 18
3032.9 Temporary Concrete Traffic Barrier 18

3033 TEMPORARY TRAFFIC CONTROL CONSTRUCTION REQUIREMENTS 19
3033.1 Scope 19
3033.2 Sign Installation 19

3033.3 Temporary Pavement Marking Installation 19
3033.4 Placement of Channelizers 20
3033.5 Lane Closures 20
3033.6 Flaggers 20
3033.7 Street or Sidewalk Closures 20
3033.8 Detours 21
3033.9 Excavations, Embankments, and Obstructions 21
3033.10 Additional Traffic Control 21
3033.11 Maintenance Work 21
3033.12 Deficiencies 22
3033.13 Final Clean Up 22

3034 TEMPORARY TRAFFIC CONTROL MEASUREMENT AND PAYMENT 22

3011 SIGNING GENERAL

3011.1 Scope

This work shall consist of furnishing of all material, equipment, and labor for the complete installation of permanent signs. Temporary signing shall conform to the temporary traffic control requirements in Section 3031.

3011.2 Codes and Standards

All work and material shall be in accordance with the latest requirements of the Manual on Uniform Traffic Control Devices (MUTCD), Standard Highway Signs (SHS), and all applicable local ordinances.

3011.3 Modification of Specifications

These Specifications may be modified or deleted by appropriate items in the Project Special Provisions or by written authorization by the City Engineer.

3011.4 Incidental Work and Parts

Work incidental to permanent signage that is not covered in these Specifications shall be performed in accordance with the City of Lee's Summit specifications and standards. All incidental parts, which are not shown on the Plans or specified in the Specifications and which are necessary to complete the installation of signage, shall be supplied and installed by the Contractor to the satisfaction of the City Engineer. No additional payments will be made for incidental work or parts.

3011.5 Existing Signing

The Contractor shall maintain all existing signs not shown on the Plans as to be removed. At the onset of the project, the Contractor should verify and document the condition of each sign that is to be re-used. The Contractor shall be responsible for the appropriate care of all existing signs that are to be re-used. Any signs that are damaged, lost or stolen shall be replaced by the Contractor at the Contractor's expense.

All Stop, Yield, or street name signs shall be maintained in a conspicuous location for the driving public. All Stop and Yield signs removed for construction purposes can be temporarily erected in reflectorized drums (no less than 7 feet above the pavement surface) until they can be reinstalled. Any temporary Stop or Yield sign installation to be left in place overnight will require prior approval from the City Inspector.

3011.6 Permits and Inspections

The Contractor shall contact the Public Works Department before any project work begins to notify the City Engineer of the construction schedule and to request project inspections. The Contractor is responsible for obtaining all necessary permits from the City, and is responsible for all associated costs, before any work can begin.

3011.7 Maintenance Work

The Contractor is responsible for making all repairs and replacements, including downed or damaged signs, regardless of the cause or responsible party, until the work is completed, inspected, and accepted by the City.

3012 SIGNING MATERIALS AND EQUIPMENT

3012.1 Scope

This section governs the furnishing of all signs, posts, and other material and equipment supplied by the Contractor, as required to complete the installation of permanent signs as shown on the Plans, the Standard Drawings, and as specified in the Project Special Provisions. All signing material and equipment shall be of new stock unless the contract provides for relocation of existing units or use of units furnished by others. New material and equipment shall be of the best grade, and shall meet the approval of the City Traffic Engineer.

3012.2 Sign Blanks

Sign blanks shall be of aluminum, 6061-T6 alloy. Sign blanks shall be degreased and coated with an alodized finish to ensure that sign sheeting adheres to the surface. Sign blank thickness shall be 0.125 inches for signs with an area greater than nine square feet (9 sq. ft.). Sign blanks for overhead street name signs shall also have a thickness of 0.125 inches. Sign blanks for signs with an area less than or equal to 9 sq. ft. shall be 0.080 inches thick. Sign blanks shall have corner radii and holes punched according the Federal Highway Administration's Standard Highway Signs, or as specified in the Plans.

3012.3 Sign Sheeting

Sign blanks shall be covered with retroreflective, high intensity prismatic sign sheeting, meeting the requirements of ASTM D4956-04 Spec. Type III. Screen-printed signs are no longer acceptable and shall not be used. Signs containing blue, red or green lettering and/or symbols shall be made with acrylic overlay film manufactured by 3M, or approved equal. Signs containing black lettering and/or symbols shall be made of black vinyl. All sign sheeting shall be applied without splices, and shall be free from air bubbles, wrinkles or other blemishes.

3012.4 Sign Posts

The type of sign post shall be supplied as shown on the Plans, Standard Drawings, or as specified in the Project Special Provisions.

3012.4.1 Square Steel Posts

All square steel sign posts shall be 2" x 2", 14 gauge galvanized steel, square tubular posts, with 3/8-inch (3/8") diameter holes at one inch (1") spacing on all sides. Square steel posts shall be galvanized according to ASTM A653. All square steel posts shall be furnished with a 12 gauge, two-piece break-away anchor as shown on the Standard Drawings. All components of the break-away anchor shall be galvanized.

3012.4.2 Decorative Posts

The City Traffic Engineer may authorize the use of decorative sign posts. Decorative sign post shall be 2" x 2", 14 gauge galvanized steel, square tubular posts, with 3/8-inch (3/8") diameter perforated holes at one inch (1") spacing on all sides. The holes on the post shall NOT be punched through. The posts shall be galvanized per AASHTO M-120 specifications. The post should also have a conversion coating, a clear organic polymer topcoat, and be powder coated black. All decorative post shall have a break-away anchor, as specified for square steel posts.

3012.4.3 U-Steel Posts

All U-Steel sign posts shall be steel, U-shaped channel, weighing three pounds per linear foot (3 lb/ft). The posts shall have 3/8-inch (3/8") diameter holes at one inch (1") spacing along the center of the

channel. U-steel posts shall be hot dip galvanized per ASTM A123. U-Steel posts shall have an anchor as shown in the Standard Drawings.

3012.5 Sign Mounting Hardware

All sign mounting hardware shall be stainless steel, with the exception of a 5/16 inch flat plastic washer to be installed against the sign face, as shown on the Standard Drawings. All strap type sign supports, including brackets and seals shall be 3/4” wide Type 201 stainless steel, 0.030” thick.

3013 SIGNING CONSTRUCTION REQUIREMENTS

3013.1 Scope

This section governs the installation of permanent signs as shown on the Plans, the Standard Drawings, and as specified in the Project Special Provisions.

3013.2 Sign Post Installation

The Contractor shall stake the location for all proposed sign posts. The City Inspector shall inspect the staking before installation begins. Minor relocations to avoid conflicts may be allowed by the City Traffic Engineer.

Sign posts shall be located so that the nearest edge of the sign is not less than two feet (2’) laterally from the back of the curb line, or six feet (6’) laterally from the edge of pavement on a non-curbed facility. Street name signs shall be located so that the nearest edge of the sign is not less than one foot (1’) laterally from the back of the curb line, or six feet (6’) from the edge of pavement on a non-curbed facility. The minimum height to the bottom edge of the sign shall be as shown in the Standard Drawings.

The Contractor shall be responsible for determining post lengths to ensure that all signs mounted on a post have the required clearance as shown on the Standard Drawings. Field cutting of posts will be permitted, however torch-cutting steel posts is prohibited.

Sign posts shall be plumbed vertical. The cross-sectional dimensions of the posts and/or the coating shall not be damaged during installation. Any post bent or otherwise damaged to the extent that the post is considered unfit for use shall be removed and replaced with an acceptable post at the Contractor's expense.

3013.3 Storage of Signs

Signs delivered for use on a project or existing signs to be reinstalled shall be stored in a manner meeting the approval of the City Traffic Engineer. Any sign damaged, discolored or defaced during transportation, storage, or installation may be rejected.

3013.4 Sign Installation

Signs shall be mounted directly to the sign post with 5/16” bolt, nut and appropriate washers per the Standard Drawings. A flat plastic washer shall be installed between the sign face and stainless steel mounting hardware.

Signs on traffic signal posts or street light poles shall be mounted with strap or clamp type sign supports, or brackets as shown on the Plans or as approved by the City Traffic Engineer. The requirements for signs mounted on mast arms are described in Section 2900 of the City of Lee’s Summit Design and Construction Manual.

3013.5 Removal and Reinstallation of Existing Signs

Removal, transportation, storage, and reinstallation of existing signs should be as indicated in the Plans, Specifications, or Project Special Provisions. The Contractor is responsible for repair or replacement of any existing signs damaged during the removal and reinstallation operations at the Contractor's expense.

All sign blanks and sign posts that are removed and are not to be reinstalled on the project shall be delivered to the City's Public Works Maintenance Facility, 1971 SE Hamblen Road. The Contractor is responsible for disposal of any items that are damaged or any items not to be salvaged.

New bolts, nuts, washers, and other required appurtenances shall be provided by the Contractor in order to reinstall existing signs. Such items shall be considered subsidiary to sign reinstallation.

3013.6 Final Clean Up

Before final acceptance, the Contractor shall restore to a condition equal to or better than that existing prior to construction all property, both public and private, within, adjacent to and beyond the limits of construction that have been disturbed or damaged while executing the work. This includes, but not limited to, existing curb and gutter, sidewalk, pavement, drainage structures, irrigation systems, street lighting and traffic signal equipment. All unpaved areas damaged during construction shall be restored to the original condition. Unless otherwise directed, grassy areas which were originally sodded shall be re-sodded. Restoration work shall be at the Contractor's expense. All restoration work shall be acceptable to the City Inspector.

3014 SIGNING MEASUREMENT AND PAYMENT

See Division I – General Requirements for CIP, Section 01120.

3021 PAVEMENT MARKING GENERAL

3021.1 Scope

This work shall consist of furnishing of all material, equipment, and labor for the complete installation of permanent pavement markings. Temporary pavement markings shall conform to the temporary traffic control requirements in Section 3031.

3021.2 Codes and Standards

All work and material shall be in accordance with the latest requirements of the Manual on Uniform Traffic Control Devices (MUTCD) and all applicable local ordinances.

3021.3 Modification of Specifications

These Specifications may be modified or deleted by appropriate items in the Project Special Provisions or by written authorization by the City Engineer.

3021.4 Incidental Work and Parts

Work incidental to pavement markings that is not covered in these Specifications shall be performed in accordance with the City of Lee's Summit specifications and standards. All incidental parts, which are not shown on the Plans or specified in the Specifications and which are necessary to complete the installation of pavement marking, shall be supplied and installed by the Contractor to the satisfaction of the City Engineer. No additional payments will be made for incidental work or parts.

3021.5 Integrity of Design and Installation Standards

The Contractor shall make no design modification, material substitution, or revision of any kind without prior approval of the City Traffic Engineer. Materials or installation procedures deemed unsatisfactory by the City Traffic Engineer, with regard to retroreflectivity, bead distribution, paint thickness, overspray, accuracy, line width, consistency, tracking, or failure to comply with approved specifications shall not be used for pavement marking.

3021.6 Permits and Inspections

The Contractor shall contact the Public Works Department before any project work begins to notify the City Engineer of the construction schedule and to request project inspections. The Contractor is responsible for obtaining all necessary permits from the City, and is responsible for all associated costs, before any work can begin.

3021.7 Warranty

The Contractor shall warranty both the labor and the pavement marking materials used for a minimum period of one year from the date of application; the warranty period and time referenced deficiency measures noted below shall be extended for the duration of applicable project bonds. The Contractor shall submit a written warranty on company letterhead, which at a minimum shall require the Contractor to replace any line or symbol with any of the following deficiencies:

- More than 10% of a 1,000 foot length of a longitudinal line is damaged within one year of the date of application,
- More than 10% of an individual symbol is damaged within one year of the date of application, or
- A line or symbol has retroreflectivity values less than 150 millicandelas/sq m/lux for white and 100 millicandelas/sq m/lux for yellow within one year of the date of application.

3021.8 Property Damage

The Contractor shall be responsible for work-related accidents and damages to public or private property caused by pavement marking installation. All property damage shall be reported to the City Engineer. Claims of damage to private property made directly to the City will be forwarded to the Contractor for resolution. Repair of damage to private property shall be completed prior to City acceptance of completed work. An amount equal to the claim for damage sustained to public or private property may be withheld from payment to Contractor until the City Engineer determines that the claim has been satisfactorily resolved.

3022 PAVEMENT MARKING MATERIALS AND EQUIPMENT

3022.1 Scope

This section governs the furnishing of all material and equipment supplied by the Contractor, as required to complete the installation of pavement markings as shown on the Plans, the Standard Drawings, and as specified in the Project Special Provisions.

3022.2 Material Selection

The type of pavement marking material to be used on a specific project depends on the type of marking and surface. If the material to be used is not specified in the Plans or in the Project Special Provisions, the table on the following page shall be used for material selection. Selected material shall be approved by the City Traffic Engineer prior application.

TABLE OF PAVEMENT MARKING MATERIALS

Marking / Surface	Longitudinal Lines	Diagonal Lines	Crosswalk & Stop Lines	Dashed Lines	Symbols
Asphalt	Thermoplastic* or High-Build Paint	Thermoplastic* or High-Build Paint	Pre-Formed Thermoplastic	Pre-Formed Thermoplastic	Pre-Formed Thermoplastic
Concrete	Urethane or High-Build Paint	Urethane or High-Build Paint	Pre-Formed Thermoplastic	Pre-Formed Thermoplastic	Pre-Formed Thermoplastic
Nova-Chip/ Microsurface	Thermoplastic*	Thermoplastic*	Pre-Formed Thermoplastic	Pre-Formed Thermoplastic	Pre-Formed Thermoplastic
Slurry Seal	Thermoplastic* or High-Build Paint	Thermoplastic* or High-Build Paint	Pre-Formed Thermoplastic	Pre-Formed Thermoplastic	Pre-Formed Thermoplastic

* Binder-sealer recommended by the manufacturer will be required on surfaces older than two months.

3022.3 High-Build Paint

High-build paint shall be white or yellow paint that is specifically manufactured for use as pavement markings. The paint shall consist of acrylic resin, lead-free pigments, dryers, water as solvent, and sufficient pigment suspending agents to insure soft settlement during storage.

The paint supplied shall be from freshly prepared stock and shall be formulated and manufactured from first grade materials. The paint shall be a fast-drying, waterbase, acrylic resin type paint capable of withstanding air and roadway temperatures without bleeding, staining, discoloring, or deforming. The dried film shall be capable of maintaining its original dimensions and placement without chipping, spalling, or cracking. In addition, it shall not deteriorate because of contact with sodium chloride, calcium chloride, mild alkalies and acids, or other ice control materials, oil, gasoline, or diesel fuel droppings from vehicles.

The paint must comply with the following requirements:

A. Formulation: The pigment of the Yellow paint shall consist of the following for each 100 gallons of paint:

   i. 30 lbs. of approved Hansa Yellow
   ii. 17 lbs. of Rutile Titanium Dioxide
   iii. Other such extender pigments as necessary to produce a close match to the yellow color requirement.

   White and yellow paint shall be composed of 100% acrylic polymer, which shall be Rohm and Haas HD-21 acrylic resin.

B. Consistency (viscosity): The consistency shall not be less than 75 nor greater than 90 K.U. as determined by ASTM D562.

C. Dry-Opacity: A contrast ratio of not less than 0.96 when the paint is applied with a 0.012 inch film applicator. Dry-opacity will be determined according to method 4121.1, Federal Test Method Standard No. 141c.

D. Dry to No Pick-Up Time: Maximum 5 minutes.
E. Fineness of Grind: The fineness of grind shall be no less than 3 Hegman units when tested according to ASTM D1210.
F. Daylight Reflectance: Daylight Reflectance of the white paint shall not be less than 80% relative to magnesium oxide when tested according to ASTM E1347.
G. Color: Yellow color must meet the following minimum chromaticity coordinates:

CIE Chromaticity Coordinate Limits (Initial)								
Color	1		2		3		4	
	x	y	x	y	x	y	x	y
Yellow	0.475	0.450	0.490	0.433	0.520	0.450	0.495	0.475

Yellow paint must display a nighttime presence of yellow when viewed from automobile headlights.

White paint shall be pure white (free of tint)

H. Bead Embedment: At least 90% of the glass beads must be embedded between 50% and 70%.
I. Retroreflectivity: The following minimum retroreflectivity requirements shall be met when using an acceptable 30-meter retroreflectometer between 2 and 14 days after application:

i. White 250 millicandelas/sq m/lux (min.)
ii. Yellow 175 millicandelas/sq m/lux (min.)

Each batch of paint shall be tested and certified in the factory. Receipt of certification shall be provided to the City. High Build Paint shall be tested in accordance with the requirements of Federal Specification TT-P-1952B.

No paint shall be used that is more than 6 months old.

3022.4 Pre-Formed Thermoplastic

Pre-formed thermoplastic materials shall be suitable for use on either asphalt or concrete pavements. A manufacturer recommended heat source fuses the markings to the asphalt or concrete pavements. Glass beads are pre-mixed into the material furnished, and also must be applied to the surface either before or after fusion to the pavement. Upon cooling, the material produces an adherent reflectorized marking of specified thickness and width, capable of resisting deformation by traffic. Pre-formed thermoplastic materials shall comply with AASHTO M 249 with exception of the relevant differences due to the material being supplied in a pre-formed state, and must meet the following requirements:

A. Material shall have a minimum thickness of 90 or 125 mils as supplied by the manufacturer.
B. Material shall be resistant to deterioration due to exposure to sunlight, water, oil, gasoline, salt, or adverse weather conditions.
C. All pigments must be heavy metal free, including, but not restricted to lead, cadmium, and mercury.
D. After application, the material must exhibit no appreciable deformation or discoloration, remain tack free, and not lift from the pavement under normal traffic conditions within a road temperature range of 20° F to 150º F.

E. Material shall be capable of conforming to pavement contours, breaks, and faults through the action of traffic at normal pavement temperatures.
F. Color: Yellow color must meet the following minimum chromaticity coordinates:

CIE Chromaticity Coordinate Limits (Initial)								
Color	1		2		3		4	
	x	y	x	y	x	y	x	y
Yellow	0.475	0.450	0.490	0.433	0.520	0.450	0.495	0.475

White color shall be pure white (free of tint)

G. Retroreflectivity: The following minimum retroreflectivity requirements shall be met when using an acceptable 30-meter retroreflectometer within 14 days after application:

i. White 300 millicandelas/sq m/lux (min.)
ii. Yellow 225 millicandelas/sq m/lux (min.)

3022.5 Thermoplastic

Thermoplastic pavement marking material shall be applied to asphalt surfaces in a molten state, and which upon cooling to normal pavement temperature, produces an adherent reflectorized stripe capable of resisting deformation. Thermoplastic material shall meet the requirements of AASHTO M249-79. Thermoplastic shall only be applied to surfaces that are less than two months old, unless a binder-sealer recommended by the manufacturer is applied.

3022.6 Urethane

Urethane pavement marking material shall consist of a homogeneous blend of modified urethane resins and pigments designed to provide a simple volumetric mixing ratio of two components (must be two volumes of Part A to one volume of Part B). No volatile solvent or fillers will be allowed.

A. Pigmentation: The pigment content by weight of component A shall be determined by low temperature ashing according to ASTM 0 3723. The pigment content shall not vary more than ± two percent from the pigment content of the original qualified paint.

   White Pigment shall be Titanium Dioxide meeting ASTM D 476 Type II, Rutile.

   Yellow Pigment shall be an Organic Yellow and contain no heavy metals.

B. Upon heating to application temperature, the material shall not exude fumes, which are toxic or injurious to persons or property when handled according to manufacturer specifications. The urethane pavement marking material compositions shall not contain free isocyanate functionality.
C. Daylight Reflectance: The daylight directional reflectance of the cured modified urethane. material (without reflective media) shall be a minimum of 80 percent (white) and 50 percent (yellow) relative to magnesium oxide when tested using a color spectrophotometer with a 45 degrees circumferential /zero degrees geometry, iIluminant C, and two degrees observer angle. The color instrument shall measure the visible spectrum from 380 to720 nm with a wavelength measurement interval and spectral bandpass of 10 nm. In addition, the color of the yellow modified urethane shall visually match Color Number 33538 of Federal Standard 595a with chromaticity limits as follows:

CIE Chromaticity Coordinate Limits (Initial)								
Color	1		2		3		4	
	x	y	x	y	x	y	x	y
Yellow	0.490	0.470	0.475	0.438	0.485	0.425	0.539	0.456

D. Weathering Resistance: The modified urethane, when mixed in the proper ratio and applied at 14 to 16 mils wet film thickness to an aluminum alloy panel (Federal Test Std. No. 141, Method 2013) and allowed to cure for 72 hours at room temperature, shall be subjected to accelerated weathering for 75 hours. The accelerated weathering shall be completed by using the light and water exposure apparatus (fluorescent UV - condensation type) and tested according to ASTM G 53.

The cycle shall consist of four hours UV exposure at 50nC (122 OF) and four hours of condensation at 40°C (104 OF). UVB 313 bulbs shall be used. At the end of the exposure period, the material shall show no substantial change in color or gloss.

E. Drying Time: The modified urethane material, when mixed in the proper ratio and applied at 14 to 16 mils wet film thickness and with the proper saturation of glass spheres, shall exhibit a no-tracking time of three minutes or less when tested according to ASTM D 711.

F. Adhesion: The catalyzed modified urethane pavement marking materials when applied to a 100 x 100 x 50 mm (4 x 4 x 2 in.) concrete block shall have a degree of adhesion which results in a 100 percent concrete failure in the performance of this test

The concrete block shall be brushed on one side and have a minimum strength of 3,500 psi. A 2 in. square film of the mixed modified urethane shall be applied to the brushed surface and allowed to cure for 72 hours at room temperature. A 2 in. square cube shall be affixed to the surface of the modified urethane by means of an epoxy glue. After the glue has cured for 24 hours, the modified urethane specimen shall be placed on a dynamic testing machine in such a fashion so that the specimen block is in a fixed position and the 2 in. cube (glued to the modified urethane surface) is attached to the dynamometer head. Direct upward pressure shall be slowly applied until the modified urethane system fails. The location of the break and the amount of concrete failure shall be recorded.

G. Hardness. The modified urethane marking materials, when tested according to ASTM 0-2240, shall have a Shore D Hardness greater than 75. Films shall be cast on a rigid substrate at 14 to 16 mils in thickness and allowed to cure at room temperature for 72 hours before testing.

H. Abrasion. The abrasion resistance shall be evaluated on a Taber Abrader with a 1,000 gram load and CS-17 wheels. The duration of test shall be 1,000 cycles. The wear index shall be calculated based on ASTM test method 0-4060 and the wear index for the catalyzed material shall not be more than 80. The tests shall be run on cured samples of modified urethane material which have been applied at a film thickness of 14 to 16 mils to code S-16 stainless steel plates. The films shall be allowed to cure at room temperature for at least 72 hours and not more than 96 hours before testing.

I. Tensile. When tested according to ASTM 0-638, the modified urethane pavement marking materials shall have an average tensile strength of not less than 6,000 pounds per square inch. The Type IV Specimens shall be pulled at a rate of X" per minute by a suitable dynamic testing machine. The samples shall be allowed to cure at 75 ºF± 2°F for a minimum of 24 hours and a maximum of 72 hours prior to performing the indicated tests.

J. Compressive Strength. When tested according to ASTM D-695, the catalyzed modified urethane pavement marking materials shall have a compressive strength of not less than 12,000 pounds per square inch. The cast sample shall be conditioned at 75°F± 2°F for a

minimum of 72 hours before performing the indicated tests. The rate of compression of these samples shall be no more than ¼" per minute.

3022.7 Drop-On Glass Beads

Drop-on glass beads shall be specifically manufactured to be compatible with pavement markings, and shall comply with AASHTO M 247, Type I.

3023 PAVEMENT MARKING CONSTRUCTION REQUIREMENTS

3023.1 Scope

This section governs the installation and removal of pavement markings as shown on the Plans, the Standard Drawings, and as specified in the Project Special Provisions.

3023.2 Surface Preparation

The surface on which markings are to be placed shall be clean and dry. The street surface shall be cleaned of debris, sand, or any other deleterious material by sweeping and or use of jets of compressed air immediately preceding the application of markings. New PCC pavements shall be blast-cleaned to remove all curing compounds.

3023.3 Weather Limitations

The pavement surface temperature and air temperature shall be determined before the start of each day of marking operation and at any other time deemed necessary by the City Traffic Engineer. Temperatures shall be obtained with appropriate devices using the manufacturer's recommended procedure.

The pavement markings shall not be applied if the pavement shows any visible signs of moisture or it is anticipated that damage causing moisture, such as rain showers, may occur during the installation and curing periods.

3023.4 High-Build Paint Application

Paint shall be machine applied using spray guns designed and adjusted to apply paint at the required thickness and width. If there is any evidence of gun clogging, splattering or uneven paint distribution, painting operations shall cease until equipment is restored to proper operation. Paint shall be applied from a vehicle that was specifically manufactured for pavement marking applications.

The pavement surface temperature and ambient air temperatures shall be above 50° F during all times when paint is being applied. Paint shall not be applied if the forecast conditions for the eight hours immediately following final application include precipitation. High-build paint shall be applied to a minimum wet thickness of 20 mils. Paint may be heated to a maximum temperature of 150° F before application.

Drop-on glass beads shall be mechanically applied to the wet paint directly behind the paint spray guns. Glass beads shall be applied evenly at a minimum rate of 9 pounds per gallon of paint. Glass beads shall be applied evenly and shall completely cover the painted area. If beads do not embed properly in the paint, all marking operations shall cease until the Contractor can demonstrate that the problem has been corrected.

The glass beads shall appear uniform on the entire marking surface. The cured paint shall properly adhere to the pavement surface. If the marking paint does not provide initial retroreflectivity or if the

marking does not have the required minimum thickness or required color, the Contractor shall re-apply the marking paint to the required thickness, at the Contractor's expense, and shall meet all requirements as previously described.

3023.5 Pre-Formed Thermoplastic Application

To apply pre-formed thermoplastic, use a heating device recommended by the material manufacturer to fuse the pre-formed thermoplastic to the pavement. Apply the pavement markings as recommended by the manufacturer. When recommended by the manufacturer, use solvent or other type of adhesive primer. Remove all existing markings or exposed aggregate before applying pre-formed thermoplastic.

3023.6 Thermoplastic Application

Thermoplastic material shall be applied to the pavement by the extrusion method wherein one side of the shaping die is the pavement and the other three sides are contained by, or a part of, suitable equipment for heating and controlling the flow of material. The equipment used to install hot thermoplastic materials under this Specification shall be constructed to provide mixing and agitation of the materials. Conveying parts of the equipment between the main material reservoir and the shaping die shall be so constructed as to prevent accumulation and clogging. All parts of the equipment that come in contact with the material shall be constructed as to be easily accessible and exposable for cleaning and maintenance. The equipment shall be constructed so that all mixing and conveying parts up to and including the shaping die will maintain the materials at a temperature not less than 375° F. To assure that the thermoplastic does not fall below the minimum temperature, the shaping die shall be heated by means of a gas-fired infrared heater or a heated, oil-jacketed system. The equipment shall be so constructed as to insure continuous uniformity in the dimensions of the stripe. The applicator shall provide a means for cleanly cutting off square stripe ends and shall provide a method of applying "skip" lines. The use of pans, aprons or similar appliances that the die overruns will not be permitted under this Specification. The equipment shall be so constructed as to provide for varying die widths and to produce varying widths of traffic marking.

A special kettle shall be provided for melting and heating the thermoplastic material. The kettle must be equipped with a thermostat so that heating can be done by controlled heat transfer liquid rather than by direct flame, so as to provide positive temperature control and prevent overheating of the material. The heating kettle and applicator shall be so equipped and arranged as to meet the requirements of the National Board of Fire Underwriters, of the National Fire Protection Association, of the state and local authorities.

Glass beads applied to the surface of the completed strip shall be applied by an automatic bead dispenser attached to the striping machine in such a manner that the beads are dispensed almost instantaneously upon the installed line. The glass bead dispenser shall be equipped with an automatic cut-off control synchronized with the cut-off of the thermoplastic material.

The equipment shall be so arranged as to permit preheating of the pavement immediately prior to application of the thermoplastic material if preheating is recommended by the thermoplastic manufacturer. The applicator shall be mobile and maneuverable to the extent that straight lines can be followed and normal curves can be made in a true arc. The applicator shall be capable of containing a minimum of 125 pounds of molten material.

The pavement and ambient air temperatures shall be not less that 55° F, and the thermoplastic material shall be applied in a melted state at a temperature of 375° F to 450° F. The temperature of the thermoplastic in the shaping die shall be maintained at the manufacturer's recommended application temperature, but in no case shall the temperature fall below 375° F.

The finished lines shall have well defined edges and be free of waviness. All lines will have minimal dribbles, runs and overlaps. In the event that thermoplastic long lines must stop and then continue, the restart shall line up to within 0.5 inches of the existing long line and maintain a totally straight line. The minimum thickness of thermoplastic lines shall be not less than 90 mils near the edges, nor less than 125 mils at the center. The drop-on glass beads shall be applied at a rate of one pound per 20 square feet of line.

3023.7 Urethane Application

The urethane pavement marking compounds shall be applied through equipment specifically designed to precisely meter the two components in the ratio of 2:1. This equipment shall produce the required amount of heat at the mixing head and gun tip and maintain those temperatures within the tolerances specified. This equipment shall also have as an integral part of the gun carriage, a high pressure air spray capable of cleaning the pavement immediately prior to the marking application.

The equipment shall be capable of spraying both yellow and white urethane, according to the manufacturer's recommended proportions and be mounted on a truck of sufficient size and stability with an adequate power source to produce lines of uniform dimensions and prevent application failure. The truck shall have at least two urethane tanks each of 110 gallon minimum capacity and shall be equipped with hydraulic systems and agitators. It shall be capable of applying glass beads by the double drop pressurized bead system. The system shall apply both the first drop glass beads and the second drop glass beads at a rate of 10 lb/gal. The equipment shall be equipped with pressure gauges for each proportioning pump. All guns shall be in full view of operators at all times. The equipment shall have a metering device to register the accumulated installed quantities for each gun, each day. Each vehicle shall include at least one operator who shall be a technical expert in equipment operations and urethane application techniques.

The pavement markings shall be applied at a minimum uniform wet thickness of 20 mils in accordance with the manufacturer's installation instructions. At the time of installation the pavement surface temperature and the ambient temperature shall be above 35° F and rising. Urethane shall not be applied if the forecast conditions for the eight hours immediately following final application include precipitation.

3023.8 Pavement Marking Removal

All pavement marking removal shall be per the Plans or as authorized by the City Traffic Engineer. Pavement markings shall be completely removed with minimal damage to the pavement. No more than five percent of the existing marking shall remain. The pavement surface shall not be left scarred with an image that misleads traffic. Any excess damage or scarring of the pavement shall be repaired at the Contractor's expense.

3023.9 Deficiencies

The Contractor shall remove and replace, at the Contractor’s expense, any finished markings that have the following deficiencies:

- Drag marks, gashes, gouges, foreign covering, discolored areas, or areas that have failed to solidify
- Improper adhesion, length or thickness
- Ragged appearance with areas that do not present sharply defined edges
- Lateral deviation in excess of two inches in a length of 200 feet of marking

3023.10 Final Clean Up

Before final acceptance, the Contractor shall restore to a condition equal to or better than that existing prior to construction all property, both public and private, within, adjacent to and beyond the limits of construction that have been disturbed or damaged while executing the work. The Contractor shall be responsible for removing all pavement marking material spilled upon the road surface or adjoining area. All restoration work shall be acceptable to the City Inspector.

3024 PAVEMENT MARKING MEASUREMENT AND PAYMENT

See Division I – General Requirements for CIP, Section 01120.

3031 TEMPORARY TRAFFIC CONTROL GENERAL

3031.1 Scope

The safety and mobility of all right-of-way users, including workers, drivers, and pedestrians throughout the project area is of paramount importance and shall be the responsibility of the Contractor. All work performed, whether in the right-of-way or adjacent to the right-of-way, that impacts vehicular or pedestrian traffic in any way shall be properly signed, marked, barricaded, and otherwise protected. This work shall consist of furnishing of all material, equipment, and labor to provide safe temporary traffic control within or adjacent to the area of work.

3031.2 Codes and Standards

All work and material shall be in accordance with the latest requirements of the Manual on Uniform Traffic Control Devices (MUTCD), Standard Highway Signs (SHS), American Traffic Safety Services Association (ATSSA) Quality Standards for Work Zone Traffic Control Devices, Standards of the American Society of Testing Materials (ASTM), National Cooperative Highway Research Program (NCHRP) Report 350, Americans with Disabilities Act Accessibility Guidelines for Buildings and Facilities (ADAAG), City of Lee's Summit Pavement Marking and Signing specifications and standards, and all applicable local ordinances.

3031.3 Modification of Specifications

These Specifications may be modified or deleted by appropriate items in the Project Special Provisions or by written authorization by the City Engineer.

3031.4 Traffic Control Plans

If a traffic control plan is not part of the Plans the Contractor shall submit a traffic control plan in accordance with the Manual on Uniform Traffic Control Devices (MUTCD) as well as all federal, state, and local regulations and ordinances. Contractor is responsible for obtaining the City Traffic Engineer's approval of said traffic control plan, before implementation.

If the Contractor would prefer to use a traffic control plan that differs from the approved plans, the Contractor may request modifications to the traffic control plan. The Contractor will submit a plan based on the timeframes and requirements of the Contract. Contractor is responsible for obtaining the City Traffic Engineer's approval of said traffic control plan, before implementation.

Based on field conditions or unforeseen circumstances, the Contractor and/or City Traffic Engineer may request modifications to the traffic control plan, whether it is the approved plan or the Contractor's plan.

The Contractor is required to maintain access to all properties served by the streets within the construction site limits.

3031.5 Minimum Requirements

The temporary traffic control requirements shown on the Plans are minimum requirements only and do not attempt to address in depth the variety of situations that may occur once construction has begun. In no way do the requirements shown on the Plans relieve the Contractor of his responsibility for selecting proper traffic control devices and implementation procedures that will assure the safety of motorists, pedestrians, and workers at all times. The Contractor shall be fully responsible for damage or injuries whether or not traffic control devices have been provided.

3031.6 Incidental Work and Parts

Work incidental to temporary traffic control that is not covered in these Specifications shall be performed in accordance with the City of Lee's Summit specifications and standards. All incidental parts, which are not shown on the Plans or specified in the Specifications and which are necessary to provide proper traffic control, shall be supplied and installed by the Contractor to the satisfaction of the City Engineer. No additional payments will be made for incidental work or parts.

3031.7 Permits and Inspections

The Contractor shall contact the Inspector 48 hours prior to installing any traffic control devices. The Contractor is responsible for obtaining all necessary permits from the City, and is responsible for all associated costs, before any work can begin. The City Inspector shall inspect and approve the final location of all traffic control devices.

3032 TEMPORARY TRAFFIC CONTROL MATERIALS AND EQUIPMENT

3032.1 Scope

This section governs the furnishing of all channelizers, construction signing, barricades, and other material and equipment supplied by the Contractor, as required, to implement the temporary traffic control as shown on the Plans, the Standard Drawings, and as specified in the Project Special Provisions. All equipment and material shall be in good condition, and shall meet the approval of the City Traffic Engineer.

3032.2 Construction Signs

All construction signs shall comply with the size, shape, legend, layout, and color requirements of the MUTCD and Standard Highway Signs book. For all signs that will be used at night, the legend, border, and background other than black shall be made from high intensity retro-reflective sheeting.

Supports or posts used for mounting signs or devices shall be designed to yield upon impact to minimize hazards to motorists, and be approved by NCHRP Report 350. Portable sign supports should not be used for durations of more than three (3) days. Sand bags shall not be used as ballast for sign supports for durations of more than seven (7) days. Supports and posts shall not be installed in pavement.

For mobile operations, a sign may be mounted on a work vehicle, a shadow vehicle, or a trailer stationed in advance of the work area or moving along with it.

3032.3 Channelizers

Channelizers, including cones, tubular markers, drums, and trim-lines shall be per the sizes shown on

the Plans or Standard Drawings. Orange shall be the predominant color on the channelizers, with bands of white high intensity retro-reflective sheeting. Trim-line channelizers are the preferred channelizing devices. Channelizers shall have a broadened base and may be constructed of polyethylene or other material to withstand impact without damage to themselves or to vehicles. Cones may not be used at nighttime.

3032.4 Barricades

Barricades shall be per the sizes shown on the Plans or Standard Drawings and in compliance with NCHRP Report 350. Stripes on barricade rails shall be alternating orange and white retro-reflective sheeting sloping downward at an angle of 45 degrees in the direction road users are to pass. Sand bags used as ballast for barricades shall be kept in good condition. Contractor shall be responsible for removing and cleaning up any sand bags that have sand escaping from them.

3032.5 Arrow Panels

Arrow panels are a matrix of lamps capable of flashing or sequential displays, to be used where necessary to divert traffic. Two types of arrow panels are acceptable for use on City streets; Type C and Type D, meeting the requirements listed in the MUTCD.

Type C arrow panels shall be used during nighttime operations. They shall have a minimum width of 96 inches and a minimum height of 48 inches. Type C arrow panels shall be mounted on a portable chassis at a minimum height of seven feet (7') measured from the bottom of the panel to the road surface.

Type D arrow panels can be used during daylight hours, for mobile operations, or for emergencies. They shall have a minimum width of 48 inches and a minimum height of 24 inches. Type D Arrow panels are mounted on work vehicles at a minimum height of seven feet (7') measured from the bottom of the panel to the road surface. Any vehicle displaying an arrow panel shall be equipped with high-intensity rotating beacon, flashing beacon, oscillating beacon, or strobe lights.

3032.6 Warning lights

Type A, B, and C Warning lights shall be portable, battery powered, yellow, enclosed lights. All types of warning lights shall be in accordance with the current edition of "Purchase Specification for Flashing and Steady-Burn Warning Lights", published by the Institute of Transportation Engineers.

3032.7 Temporary Pavement Markings

Temporary pavement markings on finish surface pavement or existing surface pavement shall be removable retro-reflective polymer marking tape. When installed on pavement that will be removed, surfaced, or resurfaced, temporary pavement markings shall be water-borne traffic paint or removable retro-reflective polymer marking tape.

3032.8 Portable Changeable Message Boards

Portable changeable message boards may be provided by the City at the discretion of Public Works. The City Traffic Engineer shall coordinate the use of portable changeable message boards with the City's Public Works Operations Division. The Operations Division shall be notified at least five (5) days before a portable changeable message board is required. All messages displayed on the boards shall be approved by the City Traffic Engineer.

3032.9 Temporary Concrete Traffic Barrier

Temporary concrete traffic barrier shall be per the standards and specifications of the Missouri

Department of Transportation (MoDOT).

3033 TEMPORARY TRAFFIC CONTROL CONSTRUCTION REQUIREMENTS

3033.1 Scope

This section governs the installation and placement of traffic control devices as shown on the Plans, the Standard Drawings, and as specified in the Project Special Provisions. All temporary traffic control shall be in conformance with the MUTCD.

3033.2 Sign Installation

The installation of all construction signage shall be in compliance with the MUTCD and the City of Lee's Summit Standard Drawings for Signing. All existing and temporary construction signs shall be removed or covered when they are not applicable. No sign posts shall be installed in paved surfaces in a manner that could cause damage to the finished surface.

Signs shall be properly maintained for cleanliness, visibility, and correct positioning. Signs that have lost significant legibility shall be promptly replaced.

Signs mounted on portable sign supports or Type 2 barricades must be installed at least one foot above the road surface. Signs mounted on Type 3 barricades should not cover more than 50 percent of the top two rails or 33 percent of the total area of the three rails.

Type B warning lights shall be installed in conjunction with all construction warning signs that will be in place at nighttime, which alert road users about a change in alignment, traffic control, lane closure, or road closure. Warning lights shall be mounted on signs in a manner that, if hit by an errant vehicle, they will not be likely to penetrate the windshield.

3033.3 Temporary Pavement Marking Installation

Temporary pavement markings are required to delineate the travel way for vehicles when the intended traffic pattern differs from the normal traffic pattern for a duration of three calendar days or more. The installation of all temporary pavement markings shall be in compliance with the MUTCD and the City of Lee's Summit Standard Drawings for Pavement Marking.

All travel lanes should be at least 11 feet wide, however a minimum lane with of 10 feet may be allowed if approved by the City Traffic Engineer. A "Narrow Lanes" sign should be installed in advance of any location where the lane width is reduced to less than 11 feet.

Where temporary pavement markings are to be placed on a surface which has existing markings, the incorrect markings shall be removed or obscured to the fullest extent possible without damage to the pavement surface. Any appreciable damage or different appearance from the surrounding surface shall be repaired by the Contractor at his expense, by methods approved by the City Engineer.

On the finish surface of pavement, interim markings are required if the permanent pavement markings cannot be installed within 24 hours. Interim markings on finish surface of pavement shall consist of four inch (4") wide by two feet (2') long stripes on the center line of the street or lane line, at approximately 50 foot spacing. Interim markings shall be the same color and configuration as the permanent pavement markings.

3033.4 Placement of Channelizers

Channelizers shall be used to delineate the travel way for vehicles when the intended traffic pattern differs from the normal traffic pattern on a street. Channelizers shall be spaced as indicated on the Standard Drawings.

Type C warning lights may be mounted on channelizers that delineate the edge of the travel way. If warning lights are installed on channelizers, they shall be mounted in a manner that, if hit by an errant vehicle, they will not be likely to penetrate the windshield.

3033.5 Lane Closures

Lane closures are not permitted on arterial or collector streets before 9:00 A.M. and after 4:00 P.M. Monday thru Friday, nor anytime on Saturday, Sunday or holidays observed by the City unless prior approval is received through the City Traffic Engineer. Emergency repairs will be evaluated on a case-by-case basis. The Contractor shall not store materials or park vehicles within an otherwise moving lane of traffic.

All lane closures for durations longer than 30 minutes shall be signed and delineated with traffic control devices as illustrated in the Standard Drawings. Lane closures for durations of 30 minutes or less are considered to be short duration or mobile operations. Lane closures for short duration or mobile operations, at a minimum, shall require that a vehicle be equipped with high-intensity rotating beacon, flashing beacon, oscillating beacon, or strobe lights. Warning signs, channelizers, and/or arrow panels should also be considered, if possible.

The City Engineer reserves the right to suspend or delay certain operations to adequately provide for the movement of traffic. This may include periods of inclement weather or unusually heavy traffic.

3033.6 Flaggers

Flaggers are required anytime vehicles are directed to cross into an opposing lane of traffic on arterial or collector streets. If proper line-of-sight cannot be provided at intersections, drives, or curves, flaggers will also be required. Flaggers shall be trained by an ATSSA certified program. Flaggers shall be equipped with a STOP/SLOW paddle, and must be properly attired per the requirements of the MUTCD.

3033.7 Street or Sidewalk Closures

All street or sidewalk closures must be approved by the City Traffic Engineer. If a detour route will be provided around the closure, the detour route signing must be inspected and approved before the street or sidewalk can be closed.

When a section of street is completely closed to traffic, Type 3 barricades shall be erected at the points of closure. Barricades must extend completely across a roadway and its shoulders or from curb to curb. Type A warning lights should be installed on each Type 3 barricade used to alert drivers of a closure. Where provisions must be made for access of equipment and authorized vehicles, the Type 3 barricades should be provided with gates or movable sections that can be closed when work is not in progress, or with indirect openings that will discourage public entry. Where access is provided through the Type 3 barricades, the Contractor shall assure closure at the end of each working day.

When a street is closed, but access must still be allowed for local traffic, the Type 3 barricades usually are not erected completely across a roadway. Instead, an arrangement should be devised that will

permit local use but effectively discourage use by through traffic. A sign with the appropriate legend concerning permissible use by local traffic shall be installed.

Whenever possible, a section of sidewalk that is removed should be replaced the same day, or other materials may be used to temporarily fill the area in order to maintain pedestrian traffic.

3033.8 Detours

All detour routes are subject to the approval of the City Traffic Engineer. Where detours are permitted, all necessary detour route signing must be installed a minimum of 48 hours before the detour is in effect to allow for inspection. All detour signing shall utilize high intensity retro-reflective sheeting. While traffic is detoured, construction operations shall be expedited. Periods when detours are allowed will be strictly enforced.

3033.9 Excavations, Embankments, and Obstructions

The Contractor shall be responsible for maintaining all safeguards around excavations, embankments, obstructions, or open trenches on an around-the-clock basis, whether or not work is being actively pursued.

An all-weather surface wedge capable of supporting vehicles should be provided adjacent to an edge drop-off of more than two inches (2”), but less than four inches (4”). Such a wedge should have a slope no greater than 1:1. An all-weather surface wedge capable of supporting vehicles shall be provided adjacent to an edge drop-off of more than four inches (4”). For drop-offs of more than four inches (4”), the maximum slope of the wedge shall be 3:1. Concrete traffic barrier may be used in lieu of wedge; and should be considered if an edge drop-off exceeds twenty-four inches (24”), or for other factors such as the presence of heavy machinery or workers. “Shoulder Drop Off” signs (MUTCD No. W8-9) shall be installed adjacent to any edge drop-off of more than two inches (2”) that is not protected by a wedge or barrier.

If it is necessary to leave a trench excavated in the street open during times when work is not actively being pursued, the Contractor shall provide structurally adequate steel plates to bridge the excavation. All steel plates shall be A36 certified steel, minimum one inch (1”) thick, with lift hooks, securely fastened to the pavement with stakes or pins. Steel plates shall be installed per the requirements of the City of Lee’s Summit specifications and standards.

Orange mesh temporary fencing shall be installed around all excavations outside the street during times when work is not actively being pursued. Fencing shall be at least four feet (4’) in height, bright orange in color, and attached to posts capable of supporting the fencing without significant sagging or bowing. If the excavation or an obstruction extends into a sidewalk or driveway, a Type 2 barricade with a Type A warning light should be placed adjacent to the fencing or obstruction to warn of the hazard.

3033.10 Additional Traffic Control

The City Traffic Engineer may require additional signs, channelizers, barricades, warning lights, flaggers, or other traffic control devices at any time or at any place that, in his opinion, are necessary for proper protection of vehicular or pedestrian traffic and workers.

3033.11 Maintenance Work

The Contractor shall be responsible for maintaining all traffic control devices on an around-the-clock basis, whether or not work is actively being pursued. All traffic control devices shall be maintained in

acceptable condition as defined by the latest ATSSA "Quality Standards for Work Zone Traffic Control Devices." Devices in unacceptable or marginal condition as determined above shall be removed from the job site and replaced with devices in acceptable condition. The Contractor shall be responsible for cleaning all temporary traffic control devices as needed so that they have a neat and clean appearance at all times.

The Contractor shall be responsible for periodic checks of traffic control devices at night to verify that all devices are visible to drivers.

3033.12 Deficiencies

Deficiencies in traffic control shall be corrected immediately. Should the Contractor fail to enforce the traffic control plan or fail to clean, replace, or otherwise maintain the traffic control devices within 24-hours of verbal or written notice from the City Engineer, the City may take one or more of the actions listed on the following page:

A. City or another agency employed by the City may correct deficiencies in signing or warning devices and deduct the cost from the Contractor's pay estimate,
B. Stop the work until deficiencies are corrected,
C. Suspend all pay estimates until deficiencies are corrected, or
D. Place the Contractor in default.

3033.13 Final Clean Up

Before final acceptance, the Contractor shall restore to a condition equal to or better than that existing prior to construction all property, both public and private, within, adjacent to and beyond the limits of construction that have been disturbed or damaged while executing the work. This includes, but not limited to, existing curb and gutter, sidewalk, pavement, drainage structures, irrigation systems, street lighting and traffic signal equipment. All unpaved areas damaged during construction shall be restored to the original condition. Unless otherwise directed, grassy areas which were originally sodded shall be re-sodded. Restoration work shall be at the Contractor's expense. All restoration work shall be acceptable to the City Inspector.

3034 TEMPORARY TRAFFIC CONTROL MEASUREMENT AND PAYMENT

See Division I – General Requirements for CIP, Section 01120.

SECTION 3500 - SANITARY SEWERS

CITY OF LEE'S SUMMIT, MISSOURI
STANDARD SPECIFICATIONS

3501 MATERIALS

A. General: All materials shall conform to the latest revision of the reference standard applying to that particular material.

B. Pipe and Fittings for Sanitary Sewers

1. Allowable Materials: Pipe and fitting materials used in the construction of sanitary sewers shall be:

   a. Ductile Iron (DI) special thickness Class 50
   b. Polyvinyl Chloride (PVC)
   c. High Density Polyethylene (HDPE) (for force mains only)

2. Requirements: The pipe manufacturer shall furnish pipe of materials, joint types, sizes, and strength classes indicated and specified. The Contractor shall furnish maximum pipe lengths normally produced by the manufacturer except for fittings, closures, and appurtenances.

3. Manufacturer's Experience: The Manufacturer shall be experienced in the design, manufacture, and commercial supplying of the specified material.

4. Inspection and Testing: Inspection and testing shall be performed by the Manufacturer's quality control personnel in conformance with applicable standards.

5. Markings: Each pipe or fitting shall have the following information plainly and permanently marked by indenting in the outside surface of the pipe or painted thereon with waterproof paint:

   a. Pipe size and class or designation.
   b. Date manufactured and lot number.
   c. Manufacturer's name or trademark.
   d. For ductile iron pipe, in lieu of the above listed markings, the information may be provided on an adhesive bar code labeling system that complies with AWWA Standards. The adhesive label shall be provided on the outside surface near the bell.

6. Handling: The Manufacturer and Contractor/Developer shall use equipment and methods adequate to protect the pipe and joint elements and to prevent shock contact of adjacent units during moving or storage. Damaged sections that cause reasonable doubt as to their structural strength or water-tightness shall be rejected.

7. On-Site Inspection: All pipe and appurtenances shall be inspected by the Inspector prior to installation, and all damaged pieces, as well as any pieces not complying with

the City of Lee's Summit Standard Specifications, shall be immediately removed and replaced by pipe and appurtenances as may be acceptable to the Inspector at the expense of the Contractor/Developer.

8. Certification: Suppliers shall submit certifications with their material delivery. These certifications shall be given to the Inspector.

C. PVC Sewer Pipe and Fittings

1. Type PSM PVC Sewer Pipe and Fittings (4-inch through 15-inch diameters only): Pipe and fittings shall conform to ASTM D 3034 and F1336, except as otherwise specified herein.

   a. Material: The pipe shall be made of PVC plastic having a cell classification of 12454B or 12364B as defined in ASTM D 1784. The fittings shall be made of PVC plastic having a cell classification of 12454B or 13343B as defined in ASTM D1784.

   b. Design: Pipe shall have an integral wall bell and spigot joint and a minimum wall thickness complying with SDR 26. Fittings shall have a minimum wall thickness complying with SDR 26.

   c. Joints: Joints shall conform to ASTM D 3212. Joints shall be push-on type only with the bell-end grooved to receive a gasket. Elastomeric seals (gasket) shall have a basic polymer of synthetic rubber complying with ASTM F 477. Natural rubber gaskets shall not be accepted.

   d. Fittings:

      i. Fittings defined as wye connections suitable for assembly to 4- or 6-inch building sewers shall be bell-end with a minimum wall thickness complying with SDR 26 and shall be furnished by the pipe manufacturer.

      ii. Fittings shall be clearly marked with their SDR number. The markings shall be applied to the fittings in such a manner that they remain legible after installation and inspection has been completed.

2. PVC Pressure-Rated Pipe (SDR Series): Pipe shall conform to ASTM D 2241 except as otherwise specified herein.

   a. Material: The pipe shall be made of PVC plastic having a cell class of 12454B or 14333B, as defined in ASTM D 1784.

   b. Design: Pipe shall have an integral wall bell and spigot joint. Pipe shall have a minimum wall thickness complying with Table 2 in ASTM D 2241.

   c. Joints: Joints shall conform to ASTM D 3212 for gravity lines and ASTM D 3139 for pressure lines. Joints shall be push-on type only with the bell-end grooved to

receive a gasket. Elastomeric seals (gasket) shall have a basic polymer of synthetic rubber complying with ASTM F 477. Natural rubber gaskets shall not be accepted.

d. Fittings: Fittings shall be DI and shall conform to the requirements of Paragraph 3501.D.

3. PVC Plastic Pipe, Schedule 40: Pipe and fittings shall conform to ASTM D 1785 and ASTM D 2466, respectively, except as otherwise specified herein.

a. Material: The pipe and fittings shall be made of PVC plastic having a cell class of 12454B, as defined in ASTM D 1784.

b. Design: Pipe shall have an integral wall bell and spigot joint. Pipe shall have a minimum wall thickness complying with Table 2 in ASTM D 1785. Fittings shall have a minimum wall thickness complying with Table 1 in ASTM D 2466.

c. Joints: Joints shall conform to ASTM D 3212. Joints shall be push-on type only with the bell-end grooved to receive a gasket. Elastomeric seals (gasket) shall have a basic polymer of synthetic rubber complying with ASTM F 477. Natural rubber gaskets shall not be accepted.

d. Fittings:

i. Fittings shall be bell-end with a minimum wall thickness complying with Schedule 40 and shall be furnished by the pipe manufacturer.

ii. Fittings shall be clearly marked with their schedule number. The markings shall be applied to the fittings in such a manner that they remain legible after installation and inspection has been completed.

D. Ductile Iron Pipe (DIP) and Fittings: Pipe and fittings shall conform to ANSI/AWWA C151/A21.51, ANSI/AWWA C110/A21.10, and ANSI/AWWA C153/A21.53 except as otherwise specified herein.

1. Design: All DIP shall meet the requirements of ANSI/AWWA C150/A21.50 and ANSI/AWWA C151/A21.51. The minimum thickness shall be Special Thickness Class 50.

2. Joints: Mechanical and push-on joints for pipe and fittings shall conform to the requirements of ANSI/AWWA C111/A21.11. Natural rubber gaskets shall not be accepted.

3. Coatings: Pipe and fittings shall be furnished with exterior bituminous coating complying with ANSI/AWWA C151/A21.51.

4. Linings: Pipe and fittings shall have a hydrogen sulfide resistant ceramic quartz filled amine cured novalac epoxy interior lining, 40 mil nominal thickness. Refer to the Water Utilities List of Acceptable Manufacturers and Models.

5. Polyethylene Encasement: All ductile iron pipe and fittings shall be installed with a polyethylene tube encasement having a thickness of 0.008 inches (8 mils) and complying with Section 4.1.1. of ANSI/AWWA C105/A21.5.

E. HDPE Pipe and Fittings: Pipe and fittings shall conform to ANSI/AWWA C901 and ANSI/AWWA C906 except as otherwise specified herein.

1. Material: The pipe and fittings shall be made of polyethylene (PE) plastic having a grade if PE34 with a minimum cell classification of 345464C, as defined in ASTM D 3350.

2. Design: All HDPE pipe and fittings shall meet the requirements of ANSI/AWWA C901 and ANSI/AWWA C906. Pipe shall have a minimum wall thickness complying with DR 11. The pressure class shall be 1.5 times the working pressure plus 100 psi surge allowance.

3. Fittings: HDPE fittings shall comply with ANSI/AWWA C906 and the requirements of ASTM D 2683 for socket-type fittings, ASTM D 3261 for butt heat fusion fittings, and ASTM F 1055 for electrofusion type fittings.

F. Concrete: Concrete shall be a MCIB mix with a design strength of 4500 psi, unless otherwise shown on plans. Mix shall meet MCIB Specifications November 2007 as listed on the Concrete Promotional Group Website www.concretepromotion.com.

G. Granular Bedding Aggregate Material: See Section 2100.

H. Backfill: See Section 2100.

I. Flowable Backfill: Flowable backfill shall consist of Controlled Low Strength Material (CLSM) complying with the requirements of Section 2100, Mix Design Type A.

J. Trench Checks: Trench checks shall consist of flowable backfill as specified in Paragraph 3501.I.

K. Pipe Encasement: Concrete used for pipe encasement shall be a 4500 psi MCIB mix. Reinforcing steel shall be new billet steel complying with the requirements of ASTM A 615, Grade 60.

L. Pipe Collars: Concrete, whether reinforced or non-reinforced, used for pipe collars shall be a 4500 psi MCIB mix. Reinforcing steel, when required, shall be new billet steel complying with the requirements of ASTM A 615, Grade 60.

M. Pipe Anchors: Concrete, whether reinforced or non-reinforced, used for pipe anchors shall be a 4500 psi MCIB mix. Reinforcing steel, when required, shall be new billet steel complying with the requirements of ASTM A 615, Grade 60.

N. Building Sewer Stubs: Building sewer stubs shall be SDR 26 (minimum) PVC.

O. Casing pipe

1. Pipe

   a. The casing pipe shall be made of steel, meeting the requirements of ASTM A 139, grade B, with a minimum yield strength of 35,000 psi.

   b. The minimum wall thicknesses required are shown in the following table:

   c.

Casing Diameter (inch)	Minimum Wall Thickness
10, 12, 14, 16	0.188" (3/16")
18, 20, 22	0.250" (1/4")
24, 26	0.281" (9/32")
28, 30, 32, 34	0.312" (5/16")
36, 38, 40, 48	0.344" (11/32")

2. Pipe Supports:

   a. Casing Spacers: Casing spacer shall be a two-piece shell or band made from T-304 stainless steel of a minimum 14 gauge thickness. The shell/band shall have risers made of 10 gauge T-304 stainless steel and have a PVC liner. The bearing surface (skid or runner) shall be made of an ultra high molecular weight polymer, glass reinforced polyester, or fiberglass reinforced nylon. The shell/band shall be bolted together with T-304 stainless steel bolts. The configuration of the carrier pipe in the casing pipe shall be centered. End seals shall be made by the same manufacturer as the casing spacers and shall use stainless steel bands to hold end seals to pipes.

   b. Wood Skids:

      i. Wood skids shall be made of 4-inch by 4-inch pressure treated lumber, 3 feet long.

      ii. Skids shall be attached to sewer pipe with two stainless steel bands.

      iii. When woods skids are used, sand shall be blown into the annular space between the sewer and casing pipes.

      iv. Skids shall be spaced at 120° intervals around the circumference of the pipe. Two skids shall be used on each end of the pipe joint.

3. Ends of the Casing Pipe: The ends of the casing pipe shall be closed with one of the following (see the Standard Drawings):

   a. Manufactured end seal.
   b. Concrete plug with allowances for water flow.

P. Manholes

1. Precast Sections: Precast concrete manholes shall conform to ASTM C 478 with the following modifications.

    a. Wall thickness not less than one-twelfth of inside diameter, or 4 inches, whichever is greater, shall be used.

    b. Cement, fine aggregate, coarse aggregate and water used in the manufacture of precast manholes shall be as specified in MCIB, Section No. 1 (Materials).

    c. Integral cast bases shall be used unless prior approval is obtained from the City Engineer. The diameter of the base pad shall be 8 inches greater than outside diameter of the manhole.

    d. Pipe penetrations shall be fitted with a flexible pipe-to-manhole connector. Refer to the Water Utilities List of Acceptable Manufacturers and Models.

    e. The minimum distance from the invert of the downstream pipe to the top surface of the base shall be 3 inches.

    f. Riser Rings

        i. Concrete: Precast riser rings shall be 4 inches or 6 inches in thickness. The use of lightweight concrete with fiber reinforcement is recommended. Reinforcing shall conform to ASTM C 478. Tongue and groove joints shall be used.

        ii. HDPE: Injection-molded HDPE adjusting rings as manufactured by Ladtech, Inc.

2. Cast-In-Place-Concrete: Concrete shall comply the requirements of a 4500 psi MCIB mix.

3. Reinforcing Steel: Reinforcing steel shall be new billet steel complying with the requirements of ASTM A 615, Grade 60.

4. Joint Sealant

    a. Between Precast Sections: Joints between precast manhole pipe sections and between the manhole casting frame and precast manhole pipe sections shall be sealed with preformed butyl joint sealants meeting the requirements of ASTM C 990. The minimum bead dimension shall be 1 square inch. The butyl component of the preformed joint sealant shall consist of 60 percent (minimum) butyl rubber. Preformed joint sealants shall remain flexible at temperatures as low as 0° F. Refer to the Water Utilities List of Acceptable Manufacturers and Models.

b. Exterior of Joints: The exterior of all joints including the joint between the manhole casting frame and the precast manhole pipe sections shall be sealed with one of the following:

   i. Press-Seal EZ-Wrap Butyl joint wrap with rubber backing, 6-inch wide, or an approved equal: The butyl component of the tape shall consist of 50 percent (minimum) butyl rubber, shall contain 2 percent or less volatile matter, and shall be 0.030 inches thick. The backing component shall be EPDM rubber. A release paper may be utilized. Refer to the Water Utilities List of Acceptable Manufacturers and Models.

   ii. Heat-shrinkable joint wrap complying with ANSI/AWWA C216: The wrap system shall consist of a two-part material (backing + adhesive) with a closure system and a compatible primer. It shall consist of an irradiated and cross-linked polyolefin sheeting, pre-coated with a layer of anti-corrosion adhesive. The backing shall have a minimum recovery of 22%. The adhesive shall be a mastic-type, specially formulated to become fluid at temperatures achieved during installation and maintain flexibility in cold climates with installation temperatures down to -40°F. Upon cooling the adhesive shall form a tough, elastomeric protective layer. The wrap shall employ a closure seal to allow sealing of the overlap area. The overall thickness of an applied sleeve shall nominally measure 0.100 inches (2.5 mm). Refer to the Water Utilities List of Acceptable Manufacturers and Models.

   iii. The casting shall be sealed to the structure with an external sealing system. The seal shall be a continuous band, made of EPDM (Ethylene Propylene Diene Monomer) rubber with a minimum thickness of 65 mils. Each unit shall have a 2" wide mastic strip on the top and bottom edge rubber band. The mastic shall be non-hardening butyl rubber sealant, with a minimum thickness of ¼", and shall seal to the cone/top of the manhole and over the lip of the casting. Refer to the Water Utilities List of Acceptable Manufacturers and Models. Prior to placement of the mastic against the manhole or casting, the surfaces shall be coated with a primer capable of enhancing the mastic adhesion. The primer coat shall cover the entire surface area where the mastic is intended to adhere. Refer to the Water Utilities List of Acceptable Manufacturers and Models.

5. Non-Shrink Grout: Non-shrink grout shall be in the plastic state and show no expansion after set as tested in accordance with ASTM C 827 and shall develop compressive strength not less than 3,000 pounds per square inch with a trowelable mix within 24 hours per ASTM C 109. The placement time shall be not less than 45 minutes based on initial set per ASTM C 191.

6. Gasket: Pipe openings shall contain flexible gaskets complying with the requirements of ASTM C 923. Refer to the Water Utilities List of Acceptable Manufacturers and Models.

7. Waterproofing: All precast sections shall be waterproofed prior to shipment to the project site. Waterproofing shall be accomplished using one of the following coatings:

    a. When a sewage force main terminates in a manhole, the internal surface of the first two receiving manholes shall be lightly sandblasted and coated with a total dry film thickness of not less than 8.0 mils of Tnemec Series 69 Hi-Build Epoxiline II or approved equal.

    b. Exterior manhole surfaces shall be coated with one of the following materials:

        i. A total dry film thickness of not less than 14.0 mils of bituminous coating.

        ii. A total dry film thickness of not less than 4.0 mils of Tnemec Series 66 Hi-Build Epoxiline or approved equal.

8. Manhole Steps: Steel core plastic coated steps shall meet the following minimum requirements:

    a. The standard plastic coated step shall be as referenced in the Water Utilities List of Acceptable Manufacturers and Models.

    b. The plastic coating shall be a copolymer polypropylene complying with ASTM D 4101 with a classification of PP0344B33534Z02 or better.

    c. The steel core shall be a minimum of ½ inch in diameter and shall conform to ASTM A 615, grade 60.

9. Manhole Castings

    a. Material for all iron castings shall comply with the requirements of "Drainage Structure Castings," AASHTO M306, Section 3, except if cast iron is used, it shall be ASTM A48/AASHTO M105, Class 30B or better.

    b. Workmanship and Finish: Manhole castings shall comply with the requirements of AASHTO M306, Paragraphs 4.1 and 5.1. All castings shall be manufactured true to pattern and component parts shall fit together in a satisfactory manner.

    c. Seating and Bearing Surfaces: All horizontal-bearing surfaces shall be machined. Castings shall conform to the requirements of AASHTO M306, Paragraph 4.3.

    d. Rating: Castings shall be heavy duty and capable of handling loads of at least 40,000 pounds. Proof-load testing shall conform to the requirements of AASHTO M306, Section 7. Proof-load testing is not required for the adapters (Lee's Summit ID Nos. LS106A-D, LS107A-D).

e. Markings:

i. Imported castings shall meet the country-of-origin markings as required in Title 19, Code of Federal Regulations, Part 134 (19 CFR 134).

Lettering for country-of-origin marking shall not exceed 1 ½ inches.

ii. Castings shall conform to the requirements of AASHTO M306, Section 11. Julian heat date shall be cast, not stamped, into the castings.

f. Dimensional Tolerances: The dimensions of all castings shall be within the permissible variations specified in AASHTO M306, Paragraph 4.2, except 4.2.4 shall be replaced with the following: No casting shall weigh less than 95 percent of the specified weight shown on the Standard Drawings.

g. Frames and Covers: Frames and covers shall meet the following minimum requirements:

i. Critical dimensions and Lee's Summit part numbers shown in the Standard Drawings.

ii. All manhole frames (except the slab bolt-down manhole frame) shall be designed and delivered with a full mud ring. Partial projections shall not be accepted.

iii. All covers shall have two concealed pickholes that meets the manufacturer's requirements.

iv. All covers shall have the "City of Lee's Summit" and "Sewer" cast into the piece in 1 ½-inch and 3-inch letters, respectively.

v. Castings shall be fully interchangeable in the field with the equivalent Clay & Bailey models indicated in Paragraph 3501.P.9.h.vi.below.

vi. All parts shall have a Lee's Summit part number cast into the piece in 1-inch letters. Location of the part number shall be such that when the part is installed, part number shall be readily visible without excavation of adjacent material. Part numbers shall be as shown below:

Part No.	Description
LS101A	Standard 24" Manhole Frame (Clay & Bailey 2007MR) - Matching cover is LS101B
LS101B	Standard 24" Manhole Cover (Clay & Bailey 2007) - Matching frame is LS101A
LS102A	Bolt-down Manhole Frame (Clay & Bailey 2014OR) - Matching cover is LS102B
LS102B	Bolt-down Manhole Frame Cover (Clay & Bailey 2014OR)

	- Matching frame is LS102A
LS103A	Slab Manhole Frame (Clay & Bailey 2002) - Matching cover is LS103B
LS103B	Slab Manhole Cover (Clay & Bailey 2007) - Matching frame is LS103A
LS104A	Slab Bolt-down Manhole Frame (Clay & Bailey KCMO R4) - Matching cover is LS104B
LS104B	Slab Bolt-down Manhole Cover (Clay & Bailey KCMO R4) - Matching frame is LS104A

vii. Covers marked with other cities' names and/or logos shall not be accepted.

viii. Covers located in the street right-of-way or adjacent utility easement shall be hot-dipped asphalt coated.

ix. Refer to the Water Utilities List of Acceptable Manufacturers and Models.

10. Epoxy Manhole Liner: Epoxy manhole liners shall be installed inside the first two receiving manholes downstream of force main sanitary sewer system and shall meet the following minimum requirements:

a. Epoxy Manhole Liner for Manholes: The epoxy manhole liner shall be chemical resistant (below a pH of 2.0), VOC compliant, moisture tolerant, 100% solids, two (2) component epoxy system with the following properties:

Flexural Strength [ASTM D-790]:	>10,000 psi
Compressive Strength [ASTM D-695]:	>10,000 psi
Tensile Strength [ASTM D-638]:	>7,000 psi
Adhesion:	Concrete Substrate Failure

b. Refer to the Water Utilities List of Acceptable Manufacturers and Models.

Q. Utility Markers:

1. Utility marker tape shall be minimum 2 inches wide, 4-mil thick green plastic tape with the word "SEWER" lettered in permanent black graphics.

2. In addition to utility marker tape, PVC and HDPE force main shall have a tracer wire installed along the top of the pipe. The wire shall be insulated, no smaller than 12 gauge, and for underground applications.

3. Splices in wiring shall be made with epoxy/silicon splice connector.

4. Tracer wire shall be installed along the top of service laterals. The wire shall have HDPE insulation, be no smaller than 12 gauge, and intended for underground applications. The tracer wire shall be green in color. Tracer wires shall terminate at

the ground surface inside a tracer box. Tracer box lids shall be green in color. Tracer wire shall be grounded to a minimum one pound magnesium anode at the sewer line.

3502 CONSTRUCTION AND INSTALLATION

A. General

1. Notification

   a. Disruption of Sanitary Sewer Service:

      i. When a disruption of sanitary sewer service will occur, the Contractor shall notify Water Utilities Operations at least 48 hours in advance to make the necessary arrangements.

      ii. It shall be the Contractor's responsibility to place door hangers on the affected premises at least 24 hours in advance of the disruption. The door hanger shall indicate the date and time of the disruption and its anticipated length.

   b. The Contractor's work shall be scheduled in a manner to accommodate the schedules of the City and the affected customers.

2. Protection of Existing Water Mains, Sewers, Structures, or Utilities

   a. Where new lines approach, cross, connect to, or run parallel to existing water or sewer mains, the Contractor shall be held completely responsible for protecting, preserving, and otherwise maintaining existing line during construction of new line. Any damage inflicted to water and sanitary sewer mains or structures must be promptly reported to Water Utilities Operations and arrangement made for the repair. Any damage inflicted to storm sewer lines or structures must be reported promptly to the Public Works Operations Division and arrangement made for repair. Any damage inflicted to any other utility must be reported promptly to the respective utility and arrangement made for the repair.

   b. Where new construction interferes with operation of existing mains, Contractor shall provide bypass lines or other temporary connections are required to maintain continuous service.

   c. The Contractor shall protect all existing structures, utilities, and work of any kind against damage or interruption of service that may result from the operations of the Contractor. Damage or interruption of service resulting from failure to do so shall be repaired or restored promptly at the expense of the Contractor.

   d. The Contractor shall give reasonable notice to utility companies and to other owners of property when such property is liable to damage or injury could result

from the execution of the Work, so that the owners of such utility or property may take precautionary measures.

e. The Contractor shall be responsible to adjust to finish grade any existing utility/appurtenances (i.e. valves, meter wells, sanitary sewer manhole, storm junction box etc.) that is affected by construction.

3. Handling and Storage

a. Handle pipe materials and fittings in a manner to assure installation in sound and undamaged condition. Use slings, lifting bags, hooks, and other devices designed to protect pipe, joint elements, and coatings. In handling plastic pipe of 10 feet long or greater, a double sling will be required.

b. Ship, move, and store with provisions to prevent movement or shock contact with adjacent units.

c. Pipe shall be handled in a manner that minimizes the damage to the coating. Damaged coating shall be repaired in a manner complying with the pipe manufacturer's recommendations.

4. Inspection of Materials: All pipe, fittings, and accessories shall be examined by the Inspector prior to installation for soundness and specification compliance. Rejected materials shall be marked and removed from the project site, and replaced with approved materials.

5. Alignment: Pipe shall be laid to the lines and grades as shown on the approved Engineering Plans.

6. Cleaning: All pipe, fittings, and accessories shall be kept clean of foreign matter while being handled or stored. During installation, foreign matter shall not enter the pipe or appurtenances. At the end of each working day, a temporary plug shall be installed at the termination of the pipeline.

B. Sanitary Sewer Installation

1. Installation Standards: All pipes shall be installed in accordance with the following standards:

a. DIP - ANSI/AWWA C 600.

b. PVC Pipe - ASTM D 2321.

c. HDPE Pipe - Plastics Pipe Institute, "Underground Installation of Polyethylene Pipe".

2. Installation

a. Governmental Requirements: Sanitary sewer main installation shall comply with applicable local, State, and Federal requirements.

b. Trench Dewatering: See Section 2100.

c. Drainage Course Crossings: See Section 2100.

d. Trench Widths

i. Minimum Widths: Trench widths and pipe clearances shall be not less than those shown in the following table.

MINIMUM TRENCH WIDTHS AND PIPE CLEARANCES (in)			
Nominal Pipe Diameter	**Trench Width[1]**	**Pipe Side Clearance[2] (Soil/Rock)**	**Pipe Bottom Clearance (Soil/Rock)**
6	22	6/6	6/6
8	22	6/6	6/6
10	24	6/6	6/6
12	27	6/6	6/6
15	30	6/6	6/6
18	34	6/6	6/6
21	39	7/9	6/9
24	43	7/9	6/9
27	48	8/9	6/9
30	54	8/9	6/9

[1] Measured below a horizontal plane 6 inches above the top of the pipeline.
[2] Measured from the outside face of pipe barrel to inside face of trench.

ii. Maximum Widths

(a) Maximum trench widths shall not exceed the manufacturer's recommendations.

(b) The allowable maximum trench widths hereinafter specified apply only to that portion of the trench below the horizontal plane parallel to and 6 inches above the top of the pipe.

(c) The allowable maximum widths may be exceeded at manholes, bore pits, tees, and in unstable earth material. Where the maximum trench width is exceeded, the Contractor shall provide appropriate embedment as indicated by the Design Engineer and the City Engineer.

iii. Trench Slope: See Section 2100.

iv. Trench Shields: See Section 2100.

e. Compacted Fill: See Section 2100.

f. Pipe Embedment: All pipe shall be bedded in bedding material with a minimum thickness beneath the pipe as specified in Paragraph 3502.B.2.d. See Section 2100.

g. Bedding Installation: See Section 2100.

3. Backfill: See Section 2100.

4. Utility Marker Tape: Install utility marker tape above the centerline of each sewer line. Bury marker tape 18 to 24 inches below finished grade, along the full length of the sewer line. When tracer wire is required, the tracer wire shall be installed along the top of the pipe so that the wire is in relatively continuous contact with the pipe and shall be for underground applications. The wire shall be accessible at every manhole, vault or tracer box. Marker tape and tracer wire shall be inspected by the public works inspector prior to backfill. All tracer wires shall be tested before acceptance. Any tracer wire broken during installation shall be repaired by the Contractor.

5. Wyes and Building Sewer Stubs: Wyes and building sewer stubs shall be installed as shown on the Engineering Plans or specified herein.

   a. Building sewer stubs shall be adequately plugged to prevent foreign matter from entering the pipe during construction.

   b. Wyes shall be installed at a maximum of 45 degrees and not less than 30 degrees with pipe spring-line, for pipe sizes 8- through 16-inch diameters. Wyes shall not be installed in pipe sizes equal to or greater than 18 inches in diameter.

   c. When the building sewer stub grade exceeds 20 percent, pipeline anchors shall be installed as required under Paragraph 6501.E.7 with the first anchor not more than 12 or less than 5 feet upstream of the wye.

   d. All building sewer stubs shall be constructed bell to spigot.

   e. For new construction, where a wye has been provided for a private building sewer, a second wye shall not be provided (cut-in by the builder).

   f. The Contractor shall maintain an accurate record for submittal to the Design Engineer of location, size, and direction of each wye and insertable fitting and the elevation, location, size, and length of each building sewer stub. Locations shall use the pipeline stationing as shown on the Engineering Plans.

6. Gravity Sewers: All gravity sewers shall be installed to the alignment, elevation, slope, and with pipe embedment as specified and/or shown on the Engineering Plans.

7. Pipe Encasement, Collars, Anchors, and Trench Checks

a. Concrete construction shall comply with ACI 301, Specifications for Structural Concrete.

b. Total or partial encasement of pipe in concrete shall be used where the required safe supporting strength of the pipe cannot be obtained by other bedding methods. Concrete encasement shall also be provided at locations to protect public water supplies or where there exists the possibility that standard bedding may be eroded by currents of water under and around the pipe.

c. Concrete encasement shall be constructed at locations indicated and in accordance with details as shown on the Engineering Plans and in the Standard Drawings. Start and terminate encasement at a pipe joint. Adequately support and block the pipe to maintain position and prevent flotation. Form to dimensions indicated or construct full width of a trench.

   i. Longitudinal reinforcement shall be continuous.

   ii. Concrete encasement shall be protected and cured so as to prevent excessive evaporation of moisture or freezing. Backfilling will not be considered as a suitable method of curing the encasement.

   iii. Backfill trench only after concrete encasement has obtained a minimum of 2000 psi. All backfilling shall be done in accordance with Section 2100.

d. Collars shall be constructed at locations indicated on and in accordance with details shown on the Engineering Plans and in the Standard Drawings.

e. Anchors shall be constructed at locations indicated on and in accordance with details shown on the Engineering Plans and in the Standard Drawings.

f. Trench Checks: Trench checks shall be constructed at locations indicated on and in accordance with details shown on the Engineering Plans and in the standard drawings. They shall consist of flowable backfill and extend 12 inches below the bottom of the pipe. Length shall be a minimum of 12 inches and width shall be the width of the trench. The height of the trench check shall extend to 12 inches above the top of the pipe.

8. Pipe Laying: All pipe shall be installed in accordance with the pipe manufacturer's recommendations, except as modified herein.

   a. Pipe laying shall not proceed if the trench width as measured at the top of pipe exceeds the maximum allowable trench width. If this occurs, the Contractor shall submit to the Design Engineer for approval a better bedding for the pipe or pipe of sufficient strength to provide safe supporting strength.

   b. All pipe and fittings shall be stored and handled with care to prevent damage thereto. Do not use hooks to transport or handle pipe or fittings. Do not drop pipe or fittings.

c. Pipe and fittings rejected by the Inspector shall be marked and removed from the project site. All pipe and fittings shall be examined for soundness and specification compliance prior to placement in the trench and rejected pipe or fittings shall not be incorporated into the pipeline. Check the class or pipe strength to be sure proper pipe is installed.

d. Clean joint contact surfaces prior to jointing. Use lubricants, primers, or adhesives as recommended by the pipe or joint manufacturer. Keep lubricants and applicators clean.

e. Pipe laying shall begin at the lowest point. The Contractor will not be allowed to lay any pipe if manholes are not on the project site. The pipe laying upstream of a manhole shall not proceed until the base of the manhole has been placed and leveled.

f. Unless otherwise required, lay all pipe straight between manholes. Excavate bell holes for each pipe joint. When jointed, the pipe shall form a true and smooth pipeline.

g. The alignment of all pipelines between adjacent manholes shall be true to line and grade. The pipeline from manhole to manhole shall reflect the full bore of the pipe. The pipe shall be truly centered into the abutting pipe.

h. The grade lines shown on the profile drawings extend from the centerline of the top manhole to the centerline of the bottom manhole. The pipes and appurtenances shall be truly laid to line and grade throughout, all junctions and other pieces required shall be properly excavated for and laid as shown on the Engineering Plans, and the following tolerances from true horizontal alignment and vertical grade shall be maintained:

Horizontal Alignment:	$\pm$12 inches
Vertical Grade:	$\pm$ 0.1 feet

Pipe installed but not meeting these tolerances shall be ordered removed and replaced at the Contractor's expense.

i. The sewer trench shall be excavated to sufficient depth to allow embedment to be placed in the bottom of all trenches. At the pipe joints, the trench shall be excavated to an additional depth so that the bell will not rest on the bottom of the trench, and all the weight of the pipe shall be evenly distributed along the entire length of the barrel of the pipe.

j. The sewer must be made watertight at all points; any leaks or other defects discovered at any time before the final acceptance of the Work shall be immediately repaired or that portion of the sewer shall be rebuilt if necessary.

k. In all cases, full length sticks of pipe shall be used, except in making closures.

l. Clean interior of all pipe, fittings, and joints prior to installation. To exclude entrance of foreign matter during discontinuance of installation, close open ends of pipe with snug fitting closures. Take reasonable precautions to not let water fill the open trench, and include provisions to prevent pipe flotation. Remove water, sand, mud, and other undesirable backfill materials from trench before removal of end cap.

m. In forming joints, each length of pipe shall be carefully aligned in such manner as to form an accurate concentric joint, thus providing a uniform circular pipe opening. Each length of pipe shall thrust into the bell and shall be securely held in position until the next length of pipe has been placed. Insofar as possible, commence laying of downstream end of line and install pipe with spigot or tongue end downstream.

n. The pipeline trench excavation shall be dewatered sufficiently to allow pipe joints to be made under dry conditions. No joints shall be made under water.

o. Joints:

   i. Joints shall in general be made in accordance with the manufacturer's recommendations and as specified herein. All joints to be welded or fused shall be performed by a technician certified by the manufacturer.

   ii. Clean and lubricate all joint and gasket surfaces with lubricant recommended by pipe manufacturer.

   iii. Care shall be exercised by the Contractor to insure against damage to joint material in storage, handling, or placing operations.

   iv. No damaged joint material shall be permitted to be used, and the same shall be removed from the job site.

   v. All pipe joints shall be completed by insuring that the ends of the pipe to be joined are in contact and completely shoved into "home" position.

p. Pipe shall be cut in a neat workmanlike manner without damage to pipe. Cutting of pipe with a torch is not permitted. Smooth cut by power grinding to remove burrs and sharp edges. Repair the lining as required and approved by the Inspector.

q. All pipelines shall be plugged at the end of each day's progress. Plugs or other positive methods of sealing shall be utilized at all times to protect any existing system from entrance of storm water or other foreign matter.

r. When a sanitary sewer line crosses an existing pipeline (water lines and storm), and the clearance is less than 18 inches, concrete encasement shall be required in a manner approved by the City’s on-site representative.

9. Temporary Plugs

a. Provide and install plugs as manufactured by pipe supplier or as fabricated by Contractor if approved. Plugs shall be watertight against hydraulic heads up to 20 feet. Secure plugs in place in a manner that facilitates removal when required to connect pipe.

b. Plugs shall be installed as specified or where shown on Engineering Plans. Also the open end of the sewer shall be plugged at the end of the work day with a suitable mechanical plug to prevent entry of foreign material until work is resumed.

10. Removal of Water: The Contractor shall provide dewatering as specified in Section 2100. Damaged pipe or structures of any kind resulting from insufficient dewatering facilities or similar lack of proper conduct of the work shall be replaced by the Contractor at their own expense. No structure or pipes shall be laid in water, and no water shall be allowed to run into or over any concrete work or pipe, or into or through any pipe.

11. Sewer Main Connections to Existing Pipelines and Structures

a. General: Connect pipe to existing structures and pipelines where indicated.

b. Tying a Sewer Main to an Existing Manhole: Prepare structure by making an opening with manufacturer's recommended clearance all around fitting to be inserted. The concrete structure shall be core drilled, and a flexible pipe-to-manhole connector/gasket shall be installed in such a manner that a watertight condition will result. Refer to the Water Utilities list of Acceptable Manufacturers and Models for flexible pipe-to-manhole connectors/gaskets.

c. Adding a Manhole onto an Existing Sewer Main:

i. The Contractor shall cut the existing sewer main, set a pre-cast base onto a 6-inch thick (minimum) crushed rock bedding layer, and insert sewer pipe through the manhole to connect the existing ends of the sewer main. The ends may be connected to the existing sewer through the use of rigid couplings if a bell(s) is (are) not available. The inverts may be formed using non-calcium chloride high-early strength concrete.

ii. Any portion of the existing sewer damaged by the Contractor shall be repaired or replaced. Any damaged vitrified clay pipe shall be replaced with PVC pipe, as a minimum, or DIP if required by its location.

iii. Bypass pumping shall be required and shall be coordinated with Public Works Inspections.

d. Pipe Connecting to a Structure: Pipe connecting to a structure shall be supported with bedding aggregate as specified in Section 2100.

12. Connection of Pipes of Dissimilar Materials:

a. General: The connection of pipes of different materials shall be made using approved transition couplings, and shall provide a permanent and watertight connection that will withstand the hydrostatic test pressure.

b. Pipe Diameters less than 15 Inches: Connections between different pipe materials less than 15 inches in diameter shall be made using a Fernco Strong Back coupling or approved equal unless otherwise specified on the Engineering Plans. Refer to the Water Utilities List of Acceptable Manufacturers and Models.

c. Pipe Diameters Greater than or Equal to 15 Inches: Connections between different pipe materials greater than or equal to 15 inches in diameter shall be made using a Fernco Strong Back coupling. The coupling shall be encased in MCIB/KCMMB 4000 psi concrete mix to a level 6 inches above the top of the pipe material unless otherwise specified on the Engineering Plans.

13. Abandonment of Sewer Mains and Building Sewer Stubs

a. Building Sewer Stubs shall be abandoned when buildings are demolished and there are no re-development plans to reuse the existing sewer stubs.

b. Prior to abandonment of a sewer main, the Contractor shall verify that no existing services will be affected. Building sewer stubs shall be properly abandoned prior to abandoning the sewer main.

c. If a sewer main is indicated for abandonment, it shall be abandoned by removal and backfill if required or by plugging each end of the line segment with a 1-foot thick plug of non-shrink grout sealed with a Portland cement grout.

d. If the building sewer stub to be abandoned is connected to a VCP sewer main with a wye, a short piece of pipe is left in the end of the wye, the pipe is plugged with an expandable plug, and the plug is encased with concrete. If the building sewer stub to be abandoned is connected to a VCP sewer main via a break-in connection, the building sewer stub is removed from the main and the hole is plugged with a stainless steel full-circle repair clamp.

e. If the building sewer stub to be abandoned is connected to a PVC sewer main with an in-line wye or tee, the building sewer stub is removed, and a PVC plug is installed on the end of the wye/tee. If the building sewer stub to be abandoned is connected to a PVC sewer main via a saddle connection, the building sewer stub is removed from the main, and the hole is plugged with a stainless steel full-circle repair clamp.

14. Protection of Water Supplies

a. There shall be no physical connection between a public or private potable water supply system and a sewer, or an appurtenance thereto, that would permit the passage of any wastewater or polluted water into the potable water supply.

b. Sewer mains, i.e., house connections, building sewers, truck lines, interceptors, force mains, etc., shall not be constructed within a 100-foot radius of a public water supply well. Greater separation may be required where soil and drainage conditions indicate the need for greater protection. Sewer mains constructed of DIP may be constructed within 10 feet of a private water supply well. Sewer mains constructed of other materials must be at least 50 feet from a private water supply well.

c. For sewer mains paralleling or crossing water mains, see Paragraph 6501.E.1.c.

d. Water and sewer mains shall not be placed in the same trench or excavation.

C. Acceptance Tests for Completed Sewers

1. General

a. The Contractor shall furnish all labor, equipment, water, materials, and reports for the required acceptance tests. All pipelines, including building sewer stubs, shall undergo and pass all required tests to determine soundness and workmanship. Pipelines that do not comply with the City of Lee's Summit Standard Specifications shall be repaired and/or replaced and shall be retested until the pipeline meets said specifications.

b. No testing shall be performed before backfill and compaction operations have been completed unless otherwise approved by the Inspector. In general, testing for sanitary sewers shall begin at least 30 days after completion of the sanitary sewer.

c. After backfilling has been completed, the Contractor shall conduct all testing in the presence of the Inspector.

d. Each reach of sewer shall meet the requirements of the acceptance tests. All defects shall be repaired to the satisfaction of the Inspector.

e. The Contractor shall clean and flush with clear water the pipe of excess mortar, joint sealant, and other dirt and debris prior to inspection.

2. Sewer Pipe Alignment and Grade Testing: Alignment, grade and visible defects shall be checked as follows:

a. Sewer Pipe Deflection Testing: Flexible pipelines (i.e., PVC pipe) shall be tested for deflection by pulling a mandrel through the entire length thereof.

i. The mandrel (go/no-go) device shall be cylindrical in shape and constructed with nine evenly-spaced arms or prongs. Mandrels with fewer arms will be rejected as not sufficiently accurate. The dimensions of the mandrel shall be as listed in the table below. The mandrel diameter dimension shall carry a tolerance of ±0.01 inch. Allowances for pipe wall thickness tolerances or ovality (from heat, shipping, poor production, etc.) shall not be deducted

from the mandrel diameter dimension but shall be counted in as part of the 5 percent or lesser deflection allowance. Contact length shall be measured between points of contact on the mandrel arm. The length shall not be less than as shown in the table below.

Nominal Diameter (in)	**Mandrel Length (in)**	**Mandrel Diameter (in)[1]**	
		SDR 26[2]	**SDR 21[3]**
8	8	7.37	7.41
10	9	9.21	9.21
12	10	10.96	10.96
15	12	13.42	N/A
18	15	N/A	15.47
21	16	N/A	N/A
24	18	N/A	20.63
27	27	N/A	N/A

[1] Mandrel diameter = [avg. outside diameter - 2*(min. wall thickness)]*0.95

[2] Calculated using values from ASTM D3034.

[3] Calculated using values from ASTM D2241.

ii. The Inspector shall be responsible for approving the mandrel. In the event the Contractor provides the mandrel, he/she shall provide proving rings to verify this. No mandrel testing will be witnessed or approved by the Inspector without completion of the aforementioned verification of the mandrel size for the Work.

iii. The mandrel shall be hand-pulled by the Contractor through all sections of PVC sewer mains. Any sections of sewer not passing the mandrel test shall be uncovered, and the Contractor shall re-round or replace the sewer to the satisfaction of the Inspector. These repaired sections shall be retested.

iv. Sections of DIP sewer main shall be visually checked for deflection, i.e., not deflection tested with the mandrel due to the potential for damaging the cement mortar lining.

b. Television Inspection: Sewer mains installed as part of the Work are subject to inspection by closed circuit television prior to 1) issuing a Certificate of Substantial Completion and 2) the end of the correction period. Television inspection will be done by the City at the City's expense. Any deficiencies noted shall be repaired at the expense of the Contractor.

3. Exfiltration-Infiltration Testing

a. General

i. Air pressure or hydrostatic tests shall be conducted on sewers before acceptance by the City. The exfiltration-infiltration shall not exceed 50 gallons per day per inch of nominal diameter per mile of sewer main for any section of the Work.

ii. Immediately prior to conducting a test, the groundwater level shall be determined by augering a vertical hole adjacent to the pipe and measuring the distance to the water level. Exfiltration head and air test pressures shall be adjusted for groundwater elevations over the top of the pipe.

b. Sewer Pipe Exfiltration Testing: Exfiltration tests shall be performed by the Contractor using one or a combination of the methods as set forth below. The required air pressure and/or exfiltration testing shall be successfully performed on carrier conduits prior to sealing of the ends of the casing conduits. PVC gravity sewer pipe shall be air tested.

i. Air Testing for PVC and DIP Gravity Sewer Mains

(a) The Contractor may perform air tests for all pipe sizes.

(b) Furnish all facilities required including necessary piping connection, test pumping equipment, pressure gauges, bulkheads, regulators to avoid over pressurization, and all miscellaneous items required.

(c) Each section of gravity pipeline between manholes and/or structures shall be tested after backfilling as outlined below and in accordance with ASTM F 1417. The time-pressure drop method specified in 8.2.2 of ASTM F 1417 shall be used.

(d) If the groundwater level is 2 feet or more above the top of the upstream end or if the test pressure required for the test is more than 9 psig, air testing should not be used.

(e) The pipe plug for introducing air to the sewer main shall be equipped with two taps. One tap will be used to introduce air into the line being tested through suitable valves and fittings, so that the input air may be regulated. The second tap will be fitted with valves and fittings to accept a pressure test gauge indicating internal pressure in the sewer pipe. Additional valves and fitting will be incorporated on the tap used to check internal pressure so that a second test gauge may be attached to the internal pressure tap. The pressure test gauge will also be used to indicate loss of air pressure due to leaks in the sewer main.

(f) The pressure test gauge shall meet the following minimum specifications:

Size (diameter)	4-1/2 inches
Pressure Range	0-15 psi
Figure Intervals	1 psi increments

Minor Subdivisions	0.05 psi
Pressure Tube	Bourdon Tube or diaphragm
Accuracy	+/-0.25% of maximum scale reading
Dial	White coated aluminum with black lettering, 270° arc and mirror edge
Pipe Connection	Low male ½-inch N.P.T.

Calibration data not more than one year old shall be supplied with all pressure test gauges. Certification of pressure test gauges will be required from the gauge manufacturer. This certification and calibration data shall be given to the Inspector prior to the performance of any air tests conducted for the Work.

(g) Plug ends of line and cap or plug all connections to withstand internal pressure. Due to safety considerations, the Contractor must take care to brace both the end of the pipe and plug before introducing test pressure into the system. The Contractor can then connect the air control equipment to the air hose and begin to pressurize the system. During the pressurization process, the Contractor shall monitor the air pressure of the system so that internal pressure does not exceed 5.0 pounds per square inch gauge (psig). After reaching 4.0 psig, throttle the air supply to maintain between 4.0 and 3.5 psig for at least 2 minutes in order to allow equilibrium between air temperature and pipe walls. During this time, check all plugs to detect any leakage. If plugs are found to leak, bleed off air, tighten plugs, and again begin supplying air. After temperature has stabilized, the pressure is allowed to decrease to 3.5 psig. At 3.5 psig, begin timing to determine the time required for pressure to drop to 2.5 psig. If the pressure begins to slowly drop from 3.5 psig and if the total time, in seconds, for the air pressure to decrease from 3.5 psig to 2.5 psig is greater than that shown in the table below, the pipe shall be presumed free of defects.

Pipe Size (in)	**Minimum Time (min:s)**	**Length for Minimum Time (ft)**	**Time for Longer Length (s) L = Total Length**
8	7:34	298	1.520 L
10	9:26	239	2.374 L
12	11:20	199	3.418 L
15	14:10	159	5.342 L
18	17:00	133	7.692 L
21	19:50	114	10.470 L
24	22:40	99	13.674 L
27	25:30	88	17.306 L
30	28:20	80	21.366 L

If air test fails to meet above requirements, repeat the test as necessary after all leaks and defects have been repaired and backfilled.

ii. Hydrostatic Tests for Gravity Systems:

(a) Test section shall be filled with water not less than 12 hours prior to testing. Refill the test section of pipe prior to performing the test.

(b) Perform at depths of water as measured above center line of pipe of not less than 4 feet or more than 10 feet (consideration shall be given for a water table above said centerline). Maintain the test as necessary to locate all leaks but not less than two hours.

(c) The Design Engineer shall determine the maximum allowable exfiltration rate for a given test section and then field verify that the maximum exfiltration rate has not been exceeded for that section. The maximum allowable exfiltration rate shall be approved by the City Engineer prior to testing.

c. Sewer Pipe Infiltration Testing: Where sewers are laid within the groundwater table, infiltration testing shall be conducted. Where the Inspector discovers evidence of infiltration, the Design Engineer and the City Engineer shall be contacted. The Contractor shall install weirs or other suitable flow rate measuring devices adequate to determine to the satisfaction of the City Engineer that the specified infiltration limit is not exceeded for that reach of gravity sewer. Where the specified infiltration limit is exceeded, the Contractor shall repair or replace the defective reach of the pipeline. Following repair of the pipeline, the Contractor shall re-measure infiltration flow rates and make additional repairs until an acceptable infiltration flow rate is achieved.

D. Manhole Installation:

1. Bases

a. Integral cast bases shall be reinforced in accordance with ASTM C 478. Precast integral cast bases shall be installed on a maximum of 6 inches of bedding aggregate. Depths exceeding this amount shall be filled with MCIB/KCMMB 4000 psi concrete mix.

b. If integral cast bases cannot be used, cast-in-place concrete bases shall be used with the approval of the City Engineer. Cast-in-place bases shall be MCIB/KCMMB 4000 psi concrete mix and have a minimum thickness of 12 inches. The bottom wall sections shall be embedded in the base section a minimum of 4 inches. The bottom precast wall section shall not be set upon a previously poured base. Wood shall not be used for supporting or leveling the wall section prior to pouring the base.

2. Inside Dimensions: The minimum horizontal clear distance in the barrel of the manholes shall not be less than 4 feet.

3. Precast

a. Delivery: Precast concrete components shall not be delivered to the job until representative concrete control cylinders have attained at least 80 percent of the specified minimum design strength.

b. Inspection: Precast concrete shall be inspected when delivered. Rejection of defective or cracked precast concrete components shall be in accordance with ASTM C 478.

c. Construction: Precast sections shall be cleaned of all dirt, grass, and other deleterious matter. Seal wall and cone joints with a minimum of two beads of preformed butyl joint sealant. Seal the joints between the top of the cone, adjustment or riser rings and the manhole frame with a double bead of preformed butyl joint sealant. Sections shall be placed so that steps are aligned but without rotation or damage to sealant integrity. Lift holes in excess of 2 inches in depth shall be patched with non-shrink grout.

4. Cast-in-Place:

a. Wall Thickness: Wall thickness shall conform to the dimensions as shown on the Engineering Plans.

b. Construction: Reinforcement steel shall be placed as shown on the Engineering Plans. Tie-holes shall be patched with non-shrink grout. Wall sleeves, where required, shall be installed as shown on the Engineering Plans. Water stops shall be installed at the wall and slab connection and shall be of the size, thickness, and material shown on the Engineering Plans.

c. Waterproofing: Interior protective coatings, where required, shall conform to the material specifications. Application shall conform to the manufacturer's recommendation.

5. Sealants. A double bead of preformed butyl joint sealer shall be applied to all joints. For the minimum bead dimension, see Paragraph 3501.O.4. The vertical spacing between manhole sections shall not exceed 1/4 inch. Joint sealants shall not be applied on damp or dirty surfaces.

6. Joint Wraps: The exterior of all joints, including the frame and cover assembly, shall be sealed with a 6-inch wide butyl joint wrap with rubber backing. Refer to the Water Utilities List of Acceptable Manufacturers and Models. The tape shall be overlapped at least twice its width. The tape shall not be stretched during application. Primer and/or adhesive, as recommended by the tape supplier, shall be employed for adverse, critical, or other applications.

7. Epoxy Manhole Liner: Installation of epoxy manhole liner shall consist of: cleaning the entire manhole interior surface, preparation of the manhole interior surface, frame seal, grade adjustment, cone/wall joint, pipe seals, bench and invert as required, and lining the manhole interior surface with a two component, 100% solids epoxy coating system which provides a durable, high strength, monolithic lining, at an average

thickness of 125 mils with a minimum thickness of 120 mils. The first two manholes downstream of a force main entering the system shall be lined along with any other manholes identified on the Engineering Plans.

8. Gaskets. When gaskets are used, two gasket clamps shall be utilized at each pipe-to-gasket connection with the take-up screws for the gasket clamps being positioned a minimum of 90° apart.

9. Steps: Steps shall be aligned vertically below the casting and spaced at 16-inch centers. The top step shall be not more than 1 foot below the top of the cone. The lowest step shall be not more than 1 foot above the invert bench. Field drilled step holes are not permitted in precast concrete manholes unless approved by the Inspector.

10. Castings:

    a. Castings shall be installed with the mud ring inserted inside the manhole opening and resting on a minimum of two rows of preformed butyl joint sealant.

    b. Bolt-down castings shall be held in place as shown on the Engineering Plans.

    c. Bolt-down castings shall be bolted to the manhole, not to the adjusting ring.

11. Top Slabs: Thickness shall conform to the dimensions and reinforcement steel shall be placed as shown on the Engineering Plans.

12. Inverts: Inverts shall be at least MCIB/KCMMB 4000 psi concrete mix and steel-troweled to produce a dense, smooth finish. The invert channel shall be "U" shaped in cross section and extend upward three-fourths of the inside pipe diameter. Smooth transitions shall be formed for pipes of different sizes, elevation, and bends. The invert bench shall be sloped to drain. In no case shall the inverts extend into the pipe. Manholes with precast inverts shall not be used, except as allowed in Paragraph 6501.H.10.a.

13. Top Elevation: The finish top elevation of manhole castings shall conform to the following unless otherwise shown on the Engineering Plans or directed by the Inspector.

    a. In paved or future paved areas, the top of the casting shall conform to the slope of the pavement and be 1/8 inch below the finished pavement elevation.

    b. In non-pavement areas, the top of the casting shall be at the elevation shown on the Engineering Plans or as directed by the Inspector.

14. Manhole Adjustment: All new manholes will be provided with an adjustment ring(s) underneath the casting as shown on Engineering Plans. A maximum of two 6-inch or three 4-inch riser rings shall be installed on top of the cone section. Minimize the number of riser rings used. The joints shall be sealed with a double bead of preformed butyl joint sealant. If the top of an existing manhole is required to be raised to an

elevation that will exceed 12 inches, or lowered more than the adjustment rings will allow, all vertical adjustments shall be made to the barrel of the manhole.

15. Manhole Backfilling: Manhole backfilling shall be governed by Section 2100. Any damage to the exterior manhole waterproofing shall be coated with 14.0 mils of bituminous coating prior to backfilling.

E. Acceptance Testing for Completed Manholes

1. General: All manholes and other structures installed or otherwise disturbed during construction shall be tested for infiltration-exfiltration by the method described herein. Infiltration-exfiltration testing shall be performed in the presence of the Inspector. The Contractor shall notify the Inspector 2 working days prior to beginning manhole testing. All visible leaks shall be repaired by the Contractor prior to testing and during the correction period.

2. Infiltration-Exfiltration Testing:

   a. For new manholes, lift holes penetrating the manhole wall in excess of 2 inches in depth shall be plugged with an approved non-shrink grout prior to testing. All pipes entering the manhole shall be plugged at least 8 inches into the sewer pipe. The plug shall be inflated at a location beyond the manhole/pipe. The plug and pipe shall be braced securely to prevent either item from being drawn into the manhole.

   b. Test Method: The vacuum test apparatus shall be placed inside or on top of the casting and the seal inflated according to manufacturer's directions as appropriate. A vacuum of 10 inches of mercury shall be drawn, and then the vacuum pump shall be shut off. With valves closed and hoses removed, the time shall be measured for the vacuum to drop to 9 inches of mercury. The manhole shall be acceptable if the time for the vacuum to drop from 10 inches to 9 inches is as follows:

Manhole Depth	**Time (min)**
10 feet or less	2.0
10.1 to 15.0 feet	2.5
15.1 to 25 feet	3.0
25.1 feet or greater	3.5

   c. Resealing, repairs, and retesting shall be allowed at the discretion of the Inspector.

   d. If the manhole fails the initial test, necessary repairs shall be made with a water reactive elastomeric chemical grout, such as 3M Scotch Seal Chemical Grout 5600, or a water reactive polymer solution, such as Avanti AV-202, or equivalent. Resealing and retesting shall be performed until the manhole passes the test.

3503 ACCEPTABLE MANUFACTURERS AND MODELS

A. General: A list of acceptable manufacturers and models for various materials will be maintained by the City Engineer and updated on a regular basis. An approved list of materials can be found on the City's web site www.cityofls.net. Go to Development, then Development Regulations, then Design and Construction Manual.

SECTION 3900 - WATER MAINS

CITY OF LEE'S SUMMIT, MISSOURI
STANDARD SPECIFICATIONS

3901 MATERIALS

A. General: All materials shall comply with the latest revision of the reference standard applying to that particular material. All pipes, fittings and appurtenances containing more than 0.25 percent lead calculated by weighted average shall not be used except materials in brass service saddles and fire hydrants.

B. Pipe and Fittings for Water Mains

1. Allowable Materials: Pipe and fitting materials used in the construction of water mains shall be:
   a. Ductile Iron (DI), special thickness Class 50
   b. Polyvinyl chloride (PVC), AWWA C900 and AWWA C905.
   c. Fusible Polyvinyl chloride (PVC), Fusible AWWA C900 and AWWA C905
2. Requirements: The pipe manufacturer shall furnish pipe of materials, joint types, sizes, and strength classes indicated and specified. The Contractor shall furnish maximum pipe lengths normally produced by the manufacturer except for fittings, closures, and specials.
3. Manufacturer's Experience: The Manufacturer shall be experienced in the design, manufacture, and commercial supplying of the specified material.
4. Inspection and Testing: Inspection and testing shall be performed by the Manufacturer's quality control personnel in a manner complying with applicable standards.
5. Markings: Each pipe or fitting shall have the following information plainly and permanently marked by indenting in the outside surface of the pipe or painted thereon with waterproof paint:
   a. Pipe size and class or designation.
   b. Date manufactured and lot number.
   c. Manufacturer's name or trademark.
   d. For ductile iron pipe, in lieu of the above listed markings, the information may be provided on an adhesive bar code labeling system that complies with AWWA Standards. The adhesive label shall be provided on the outside surface near the bell.
6. Handling: The Manufacturer and Contractor/Developer shall use equipment and methods adequate to protect the pipe and joint elements and to prevent shock contact of adjacent units during moving or storage. Damaged sections that cause reasonable doubt as to their structural strength or water-tightness will be rejected.

7. On-Site Inspection: All pipe and appurtenances will be inspected by the Inspector prior to installation, and all damaged pieces as well as any pieces not complying with the City of Lee's Summit Standard Specifications shall be immediately removed and replaced by pipe and appurtenances as may be acceptable to the Inspector at the expense of the Contractor/Developer.

8. Certification: Suppliers shall submit certifications with their material delivery. These certifications shall be given to the Inspector.

C. Ductile Iron Pipe and Fittings

1. Design: All DI pipe (DIP) shall comply with ANSI/AWWA C150/A21.50 and ANSI/AWWA C151/A21.51. The minimum thickness shall be Special Thickness Class 50.

2. Fittings:

   a. All DI fittings shall comply with ANSI/AWWA C110/A21.10 or ANSI/AWWA C153/A21.53 and shall have a pressure rating of 350 psi.

   b. All DI fittings shall have the pressure rating and the letters "DI" or "DUCTILE" distinctly cast into the outside surface.

3. Joints: Mechanical and push-on joints for pipe and fittings shall comply with ANSI/AWWA C111/A21.11. Natural rubber gaskets shall not be accepted.

4. Restrained Joint Pipe and Fittings:

   a. Restrained joint pipe and fittings shall be per the pipe manufacturer's recommendation. American Flex-Ring, US Pipe TR Flex, Griffen Snap-Lok, Griffen Bolt-Lok and McWane TR Flex are considered restrained joints.

   b. Retainer glands (e.g., Megalug, Uni-Flange, etc.), and gripper gaskets (e.g., Field-Lok, Fast-Grip, etc.) are not considered a permanent restraint and must be used in conjunction with straddle or thrust blocks.

5. Coatings:

   a. Pipe shall be furnished with a standard thickness exterior bituminous coating complying with ANSI/AWWA C151/A21.51.

   b. The interior and exterior of fittings shall be furnished with a fusion-bonded epoxy coating complying with ANSI/AWWA C116/A21.16.

6. Linings: Pipe shall have a standard thickness cement mortar interior lining complying with ANSI/AWWA C104/A21.4. A seal coat shall be provided over the cement mortar lining.

a. The seal coat may be subjected to an adherence test using 3M Tartan Duct Tape 3939. Pipe will be rejected if the seal coat is removed down to the cement mortar lining by the duct tape.

7. Polyethylene Encasement: All DIP and DI fittings shall be installed with a polyethylene tube encasement having a thickness of 0.012 inches (12 mils) and complying with Section 4.1.1. of ANSI/AWWA C105/A21.5. The polyethylene encasement shall be clear in color.

   a. The ends of the polyethylene encasement and joints shall be thoroughly sealed with adhesive tape. Where polyethylene wrapped pipe or fittings being installed connect to a pipe that is not wrapped (including existing pipe), extend the wrap a minimum of 3 feet onto the previously uncovered pipe. This includes service lines which may be wrapped in polyethylene or dielectric tape.

   b. Adhesive tape shall be a general purpose adhesive tape 2-inches wide, plastic backed, and capable of bonding securely to metal surfaces and/or polyethylene material. Tape shall be Polyken No. 900, Scotch Tape No. 50, Tapecoat CT or approved equal. Duct tape will not be allowed.

8. Bolts: Bolts shall comply with ANSI/AWWA C111/A21.11. All bolts shall be coated with FluoroKote #1 or approved equal. After field installation, all bolts shall be coated with an aerosol applied rubberized coating. The material shall be rapid dry and specifically designed for corrosion protection. 3M Rubberized Underseal Undercoating 08883 or any equivalent rubberized-bitumen based spray-on undercoating may be used.

D. Polyvinyl Chloride Pipe and Fittings

1. Design: All PVC pipe shall comply with either ANSI/AWWA C900 or ANSI/AWWA C905. The minimum pressure class shall be Pressure Class 235.

2. Fittings: Where fittings are required, they shall be ductile iron and comply with Paragraph 3901.C.2.

3. Joints: Joints for pipe and fittings shall comply with either ANSI/AWWA C900 or ANSI/AWWA C905.

4. Restrained Joint Pipe and Fittings:

   a. Restrained joint pipe and fittings shall be per the pipe manufacturer's recommendation. Fused and Certa-Lok are considered restrained joints.

   b. Retainer glands (e.g., Megalug, Uni-Flange, etc.), and gripper gaskets (e.g., Field-Lok, Fast-Grip, etc.) are not considered a permanent restraint and must be used in conjunction with straddle or thrust blocks.

5. Polyethylene Encasement: See Section 3901.C.7 for polyethylene encasement of DI fittings.

E. Concrete: Concrete shall be a MCIB mix with a design strength of 4500 psi, unless otherwise shown on plans. Mix shall meet MCIB Specifications November 2007 as listed on the Concrete Promotional Group Website www.concretepromotion.com.

F. Granular Bedding Aggregate Material: See Section 2100.

G. Backfill: See Section 2100.

H. Flowable Backfill: Flowable backfill shall consist of Controlled Low Strength Material (CLSM) complying with the requirements in Section 2100, Mix Design Type A.

I. Trench Checks: Trench checks shall consist of flowable backfill as specified in Paragraph 3901.H.

J. Utility Markers:

1. Utility marker tape shall be minimum 2 inches wide, 4-mil thick blue plastic tape with the word "WATER" lettered in permanent black graphics.

2. In addition to utility marker tape, a PVC water main shall have a tracer wire installed along the top of the pipe. The wire shall be insulated, no smaller than 12 gauge, and for underground applications. It shall be detectable using either the inductive or conductive modes using a pipe and cable locator.

3. Splices in wiring shall be made with epoxy/silicon splice connector.

K. Thrust and Straddle Blocks: Concrete used for thrust and straddle blocks shall be a 4500 psi MCIB mix.

L. Pipe Encasement: Concrete used for pipe encasement shall be a 4500 psi MCIB mix.

M. Valves

1. General:

a. All valves shall be certified as suitable for contact with drinking water by an accredited certification organization complying with ANSI/NSF Standard 61, Drinking Water Systems Components–Health Effects.

b. All valves shall have a 2-inch square nut operator.

c. Direction to open shall be counterclockwise and be marked as such.

d. Valves on the existing water system or valves that separate newly constructed mains from the existing water system shall be operated by City staff. The Water Utilities Supervisor shall be notified prior to operating any valves.

2. Butterfly Valves

   a. Design: All butterfly valves shall comply with ANSI/AWWA C504 for Class 150B service, as modified herein.

   b. Body: Valve bodies shall be constructed of cast iron ASTM A 126, Class B and comply with AWWA C504 in terms of laying lengths and minimum body shell thickness. Valve ends shall be mechanical joint or flanged as shown on the Drawings and shall comply with AWWA C504.

   c. Disc: Valve discs shall be made from cast iron ASTM A 126, Class B or ASTM A 48, Class 40 for 24-inch and smaller valves. For valves larger than 30 inches, the valve discs shall be built from DI complying with ASTM A 536. Disc shall be furnished with Type 316 stainless steel seating edge to mate with the rubber seat on the body. Discs for valves 20 inches and smaller shall be of an on-center design.

   d. Seat: The valve seat shall be Buna-N rubber located on the valve body. Resilient seats on the valve disc are not acceptable. For 20-inch and smaller valves, the valves shall have bonded seats that meet test procedures outlined in ASTM D 429, Method B. For valves 24 inches and larger, the seat shall be retained in the valve body by mechanical means without use of metal retainers or other devices located in the flow stream.

   e. Shaft: Valve shaft shall be 18-8 Type 304 stainless steel complying with ASTM A 276. Shaft seals shall be standard self-adjusting split V packing. Shaft seals shall be of a design allowing replacement without removing the valve shaft.

   f. Bearings: Valve bearings shall be sleeve-type that are corrosion resistant and self-lubricating.

   g. Actuator: Valve actuators shall be fully grease-packed and have stops in the open/close position. The actuator housing shall be cast or ductile iron. Valve actuator shall be attached to the body with a minimum of three bolts. The actuator shall have a mechanical stop that will withstand an input torque of 450 foot pounds against the stops without damage. The traveling nut shall engage alignment grooves in the housing. The actuator shall have a built-in packing leak bypass to eliminate possible packing leakage into the actuator housing. Actuators for valves 16 inches and larger shall be the link lever type to provide characterized closure and prevent line shock when closing.

   h. Coatings: All internal and external surfaces shall be covered with a polyamide cured epoxy coating applied over a sand blasted “new white metal surface” per SSPC-SP10 to a minimum of 6 mils in compliance with AWWA C550.

   i. Testing: Each valve shall be factory tested per AWWA C504. If the Drawings call for valves that have been subjected to and passed a one-time pressure test of 192.5 psi prior to delivery (for those areas of the City where the line pressure exceeds 100 psi), those valves shall be clearly marked to that effect. The manufacturer shall provide for

testing certification, which shall be given to the Inspector upon delivery of the valves to the site.

j. Bolts: Bolts shall comply with ANSI/AWWA C111/A21.11. All bolts shall be coated with FluoroKote #1 or approved equal. After field installation, all bolts shall be coated with an aerosol applied rubberized coating. The material shall be rapid dry and specifically designed for corrosion protection. 3M Rubberized Underseal Undercoating 08883 or any equivalent rubberized-bitumen based spray-on undercoating may be used.

k. Refer to the Water Utilities List of Acceptable Manufacturers and Models.

3. Gate Valves

a. Design: All gate valves shall comply with ANSI/AWWA C509 or AWWA C515 for resilient-seated gate valves, as modified herein. Gate valves shall be designed for underground direct burial service. The minimum design working water pressure shall be 200 psig. All internal parts shall be accessible without removing the body from the water main.

b. Body: Valve bodies shall be constructed of cast iron (ASTM A 126, Class B) or DI (ASTM A 536) complying with AWWA C509 or AWWA C515 in terms of minimum body shell thickness. Valve ends shall be mechanical joint or flanged as shown on the Drawings and shall comply with AWWA C509 or AWWA C515.

c. Gate/Wedge: The valve gate or wedge shall be fully encapsulated with rubber to create a resilient seat.

d. Stem: Valve stem shall be non-rising and made of bronze complying with ASTM B 138 or manganese bronze complying with ASTM B 584. Stem seals shall be the O-ring type, not flat gaskets.

e. Coatings: Coating shall be non-toxic and impart no taste to water. All internal and external surfaces shall be covered with a fusion bonded epoxy coating complying with AWWA C550. Although the AWWA standard only refers to interior coatings, the external epoxy coating shall be applied in a manner similar to that used for application of the interior coating. Coating shall be applied prior to assembly such that all exposed external areas—including end connection bolt holes, body-to-bonnet bolt holes, etc.—shall be coated with epoxy.

f. Bolts: Bolts shall comply with ANSI/AWWA C111/A21.11. All bolts shall be coated with FluoroKote #1 or approved equal. After field installation, all bolts shall be coated with an aerosol applied rubberized coating. The material shall be rapid dry and specifically designed for corrosion protection. 3M Rubberized Underseal Undercoating 08883 or any equivalent rubberized-bitumen based spray-on undercoating may be used.

g. Testing: Each valve shall be factory tested per AWWA C509 or AWWA C515.

h. Refer to the Water Utilities List of Acceptable Manufacturers and Models.

4. Air Release Valves

a. Design: These valves shall be combination air valves, performing the functions of both an air release and an air/vacuum valve. All air release valves shall comply with ANSI/AWWA C512.

b. Body: Valve bodies shall be constructed of cast iron complying with ASTM A 126, Class B and shall have a working pressure rating of at least 150 psi.

c. Connections: Inlets and outlets shall be full size, national standard pipe tapered (NPT) equal to the nominal valve size. The valve shall have two additional NPT connections for the connection of gauges, testing, and draining.

d. Seat: Resilient seat shall be Buna-N.

e. Orifice Button: The valve shall have an adjustable threaded orifice button.

f. Internal Parts: Floats, guide shafts, and bushings shall be constructed of Type 304 stainless steel. Non-metallic floats, linkage, or bushings are not acceptable. Floats shall be unconditionally guaranteed against failure, including pressure surges.

g. Coating: The exterior of the valve shall be coated with a universal alkyd primer.

h. Refer to the Water Utilities List of Acceptable Manufacturers and Models.

5. Tapping Valves:

a. Tapping valves shall have the same characteristics as gate valves specified in Paragraph 3901.M.3. of the City of Lee's Summit Standard Specifications. Tapping valve ends shall comply with Section 4.4.1.4.4 of ANSI/AWWA C509.

b. A flange x mechanical joint (MJ) gate valve with all characteristics specified in Paragraph 3901.M.3. of the City of Lee's Summit Standard Specifications may be used in lieu of a standard tapping valve if the tapping machine to be used does not have a full-size cutter.

N. Tapping Sleeves

1. Iron body tapping sleeves shall have the following characteristics:

a. Design: Tapping sleeves shall comply with MSS SP-111, as modified herein. The minimum working pressure rating shall be 150 psig.

b. Tapping sleeves shall be cast iron complying with ASTM A 126, Class B or DI complying with ASTM A 536 and shall be compatible with the tapping valve.

c. Coating shall comply with AWWA C550.

d. Cast iron tapping sleeves shall have MJ connection x flange end. The flange end shall include a recess to provide positive alignment of the tapping valve. Recess dimensions are per MSS SP-60.

e. Bolts: Bolts shall comply with ANSI/AWWA C111/A21.11.

f. Refer to the Water Utilities List of Acceptable Manufacturers and Models.

2. Stainless steel tapping sleeves shall have the following characteristics:

a. Design: The minimum working pressure rating shall be 150 psig. The height from the flange surface to the pipe centerline shall comply with MSS SP-111. Recess dimensions are per MSS SP-60.

b. Top Shell: The top shell shall be 18-8 Type 304 stainless steel, minimum 12 gauge thickness.

c. Bottom Shell: The bottom shell shall be 18-8 Type 304 stainless steel, minimum 14 gauge thickness.

d. Flange: The flange shall be 18-8 Type 304 stainless steel and shall have a ¾-inch NPT test port.

e. Gasket: The tapping sleeve shall have a full circumferential gasket made of synthetic rubber.

f. Refer to the Water Utilities List of Acceptable Manufacturers and Models.

O. Valve Boxes

1. Valve Box Covers: All valve box covers, whether in pavement or grassed areas, shall meet the following requirements:

a. Cast iron castings shall conform to the requirements of "Gray Iron Castings," ASTM A48/AASHTO M105, Class 30B.

b. Dimension Tolerances:

i. The dimensions of all castings shall be ± 1/8 inch of the dimensions shown in the Standard Drawings.

ii. No casting shall weigh less than 95 percent of the specified weight shown in the Standard Drawings.

c. Workmanship and Finish:

i. Castings shall be free of casting defects such as porosity, rough surfaces and shrinkage.

ii. Surfaces shall be free of fused on sand and shall be smooth.

iii. Runners, risers, fins and other cast-on pieces shall be removed.

d. Interchangeability: Castings shall be interchangeable with the City's existing valve box lids. These are assumed to be Clay & Bailey Model 2195.

e. Markings:

i. Imported castings shall meet the country-of-origin markings as required in accordance with Title 19, Code of Federal Regulations, Part 134 (19 CFR 134).

ii. The word "WATER" shall appear on the cover as shown on the standard details.

2. Valve Boxes:

a. In Pavement: Valve boxes to be located in pavement (roadways, driveways, sidewalks or shoulders) shall have a screw-type ferrous metal body. Refer to the Water Utilities List of Acceptable Manufacturers and Models.

b. In Non-paved Areas: Valve boxes to be located in non-paved areas may be made of ferrous metal, schedule 40 PVC, or of C900 PVC pipe. Valve box shall be cut to finish grade after final site grading is complete. Buried valve boxes shall be uncovered and extended by the Contractor/Developer prior to final acceptance of the Work by the City.

3. All valves with the operating nut greater than 3 feet below finished grade or road surface shall be provided with extension stems to bring the operating nut to within 3 feet of the finished grade. Stem guides shall be provided to keep the valve stem extensions concentric with the valve box.

4. All ferrous metal parts shall be painted with an asphalt varnish.

P. Backflow Prevention Devices

1. The current MDNR Approved Backflow Prevention Assemblies list shall be used to select the BFPD.

2. Vaults:

a. Vaults shall be made of at least MCIB/KCMMB 4000 psi concrete mix. Other materials may be used if approved by the City Engineer.

b. Steps meeting the requirements for manhole steps (see Paragraph 3500.P.8. of the City of Lee's Summit Standard Specifications) shall be cast into the vault wall in-line with the top opening.

c. Minimum clearance dimensions shall be as shown in the Standard Drawings.

3. Irrigation Box: Backflow prevention devices shall be installed horizontally.

Q. Fire Hydrants

1. All fire hydrants shall be the traffic model, break-away type, and comply with the current AWWA C502.

2. Hydrants shall have a minimum design working pressure of 150 psig and test pressure of 300 psig.

3. Hydrants shall have two 2½-inch nozzles and one 4½-inch pumper nozzle with national standard fire hose coupling screw thread. Nozzle caps shall be the "nut type" having the same dimensions as the operating nut. Such caps shall be securely chained to the base of the hydrant.

4. The size of the hydrant main opening shall be 5¼ inches.

5. Operating nut shall be 5-sided measuring 1½" from point to flat and include the weather shield.

6. Hydrant shall be furnished with a 6-inch isolation gate valve in accordance with Paragraph 3901.M.3 of the City of Lee's Summit Standard Specifications.

7. Direction to open shall be counterclockwise and be marked as such.

8. Hydrants shall come with an oil reservoir or grease zerk.

9. Hydrants shall be factory painted (baked on enamel) according to the following schedule:

Ownership	Color
City	Optic yellow
Private	Optic yellow with silver bonnet
Private–Yard fire hydrant (i.e., attached to the fire suppression system)	Red

10. Extension Kits

    a. Extension kits shall be supplied by the hydrant manufacturer.

    b. All extensions shall be factory painted (baked on enamel) and shall match the color of the barrel section as called for in Paragraph 3901.Q.9. above.

11. Hydrants shall be furnished with temporary black plastic caps or shall be covered with black plastic bags until the hydrants are available for service.

12. Refer to the Water Utilities List of Acceptable Manufacturers and Models.

R. Service Lines from the Water Main to the Water Meter: Service lines 2 inches in diameter and smaller shall be made of Type K soft copper, complying with ASTM B 88. Service lines greater than 2 inches in diameter shall be DIP or PVC pipe and shall comply with Paragraphs 3901.C. or 3901.D, respectively, of the City of Lee's Summit Standard Specifications, subject to restrictions based on the City's currently-adopted Fire Code.

S. Casing Pipe

1. Pipe

a. The casing pipe shall be made of steel complying with ASTM A 139, grade B, with a minimum yield strength of 35,000 psi.

b. The minimum wall thicknesses required are shown in the following table:

Casing Diameter (inch)	Minimum Wall Thickness
10, 12, 14, 16	0.188" (3/16")
18, 20, 22	0.250" (1/4")
24, 26	0.281" (9/32")
28, 30, 32, 34	0.312" (5/16")
36, 38, 40, 48	0.344" (11/32")

2. Spacers: Casing spacer shall be a two-piece shell or band made from T-304 stainless steel of a minimum 14 gauge thickness. The shell/band shall have risers made of 10 gauge T-304 stainless steel and have a PVC liner. The bearing surface (skid or runner) shall be made of an ultra high molecular weight polymer, glass reinforced polyester, or fiberglass reinforced nylon. The shell/band shall be bolted together with T-304 stainless steel bolts. The configuration of the carrier pipe in the casing pipe shall be centered. End seals shall be made by the same manufacturer as the casing spacers and shall use stainless steel bands to hold end seals to pipes.

3. Ends of the Casing Pipe: The ends of the casing pipe shall be closed with one of the following (see the Standard Drawings):

a. Manufactured end seal.
b. Concrete plug with allowances for water flow.

3902 CONSTRUCTION AND INSTALLATION

A. General

1. Notification

a. Disruption of Water Service:

i. When a disruption of water service will occur, the Contractor shall notify Water Utilities Operations at least 48 hours in advance to make the necessary arrangements.

ii. It shall be the Contractor's responsibility to place door hangers on the affected premises at least 24 hours in advance of the disruption. The door hanger shall indicate the date and time of the disruption and its anticipated length.

iii. Once the work begins, the work shall be continuous (24 hours per day) until completed.

b. The Contractor's work shall be scheduled in a manner to accommodate the schedules of the City and the affected customers.

i. In the event closing of valves to make a connection will affect a customer who cannot be without service, as approved by the City Engineer, the Contractor shall make provisions to provide temporary service to that customer.

ii. In the event closing of valves to make a connection will affect a customer who can temporarily be without service, the maximum amount of time the customer may be without service, without Contractor furnished provisions for temporary service, shall be 8 hours.

2. Protection of Existing Water Mains, Sewers, Structures, or Utilities

a. Where new lines approach, cross, connect to, or run parallel to existing water or sewer mains, the Contractor shall be held completely responsible for protecting, preserving, and otherwise maintaining existing line during construction of new line. Any damage inflicted to water and sanitary sewer mains or structures must be promptly reported to Water Utilities Operations and arrangement made for the repair. Any damage inflicted to storm sewer lines or structures must be reported promptly to the Public Works Operations Division and arrangement made for repair. Any damage inflicted to any other utility must be reported promptly to the respective utility and arrangement made for the repair.

b. The Contractor shall protect all existing structures, utilities, and work of any kind against damage or interruption of service that may result from the operations of the Contractor. Damage or interruption of service resulting from failure to do so shall be repaired or restored promptly at the expense of the Contractor.

c. The Contractor shall give reasonable notice to utility companies and to other owners of property when such property is liable to damage or injury could result from the execution of the Work, so that the owners of such utility or property may take precautionary measures.

d. The Contractor shall be responsible to adjust to finish grade any existing utility/appurtenances (i.e. valves, meter wells, sanitary sewer manhole, storm junction box etc.) that is affected by construction.

3. Handling and Storage

a. Handle pipe materials and fittings in a manner to assure installation in sound and undamaged condition. Use slings, lifting bags, hooks, and other devices designed to protect pipe, joint elements, and coatings. In handling plastic pipe of 10 feet or more long, a double sling will be required.

b. Ship, move, and store with provisions to prevent movement or shock contact with adjacent units.

c. Pipe shall be handled in a manner that minimizes the damage to the coating. Damaged coating shall be repaired in a manner complying with the pipe manufacturer's recommendations.

4. Inspection of Materials: All pipe, fittings, and accessories shall be examined by the Inspector prior to installation for soundness and specification compliance. Rejected materials shall be marked and removed from the project site, and replaced with approved materials.

5. Alignment: Pipe shall be laid to the lines and grades as shown on the approved Engineering Plans.

6. Cleaning: All pipe, fittings, and accessories shall be kept clean of foreign matter while being handled or stored. During installation, foreign matter shall not enter the pipe or appurtenances. At the end of each working day, a temporary plug shall be installed at the termination of the pipeline.

B. Water Main Installation

1. Installation Standards: All pipes shall be installed in a manner complying with the following standards:

   a. DIP - ANSI/AWWA C600.
   b. PVC Pipe - ANSI/AWWA C605.

2. Installation

   a. Governmental Requirements: Water main installation shall comply with applicable local, State, and Federal requirements.

   b. Trench Dewatering: See Section 2100.

   c. Drainage Course Crossings: See Section 2100.

   d. Trench Widths

      i. Minimum Widths: Trench widths pipe clearances shall be not less than those shown in the following table.

TRENCH WIDTHS AND PIPE CLEARANCES (in)			
		Minimum	Minimum

Nominal Pipe Diameter	Suggested Trench Width[1]	Pipe Side Clearance[2] (Soil/Rock)	Pipe Bottom Clearance (Soil/Rock)
6	30	6/6	6/6
8	32	6/6	6/6
10	34	6/6	6/6
12	36	6/6	6/6
16	40	6/6	6/6
18	42	6/6	6/6
20	44	7/9	6/9
24	48	7/9	6/9
30	54	8/9	6/9

[1] Measured at the top of the pipeline.

[2] Measured from the outside face of pipe barrel to inside face of trench.

ii. Maximum Widths: Maximum trench widths shall be governed by existing soils, trench type, bedding, and laying conditions. Maximum widths shall not exceed the manufacturer's recommendations.

iii. Trench Slope: See Section 2100.

iv. Trench Shields: See Section 2100.

e. Compacted Fill: See Section 2100.

f. Pipe Embedment: DIP and PVC pipe shall be bedded in bedding material with a minimum thickness beneath the pipe as specified in Paragraph 3902.B.2.d. Also see Section 2100.

g. Bedding Installation: See Section 2100.

3. Backfill: See Section 2100.

4. Utility Marker Tape and Tracer Wire: Install utility marker tape above the centerline of each water main. Bury marker tape 18 to 24 inches below finished grade, along the full length of the water main. When tracer wire is required, tracer wire shall be installed along the top of the pipe so that the wire is in relatively continuous contact with the pipe. The wire shall be accessible at every valve box. Marker tape and tracer wire shall be inspected by the public works inspector prior to backfill. All tracer wires shall be tested before acceptance. Any tracer wire broken during installation shall be repaired by the Contractor.

5. Domestic Service Connections

a. The City will install a corporation connection at the main for individual, commercial, industrial, and residential service lines that are 2 inches in diameter and less. The Contractor/Developer shall notify Water Utilities Operations 48 hours in advance of requiring a service connection.

b. Taps: Refer to the Water Utilities List of Acceptable Manufacturers and Models.

   i. A saddle shall be required when PVC pipe is tapped

   ii. A direct tap with a tapping machine is required for DIP.

c. For service lines larger than 2 inches in diameter, a tee shall be cut in with appropriate valving or a tapping sleeve and valve shall be installed. The Contractor/Developer shall notify Water Utilities Operations and the Inspector 48 hours prior to starting this work.

d. Excavation for service connections shall be provided by the Contractor/Developer as illustrated in the Standard Drawings. The excavation shall be prepared prior to the time scheduled with Water Utilities Operations for the tap.

e. Installation of meters greater than 2-inch diameter will be specifically approved by the City Engineer.

f. Excavation shall be adequately protected in accordance with Section 2103 of Lee's Summit Special Provisions. Backfilling shall take place as soon as practicable.

6. Thrust Restraint

   a. All plugs, caps, dead ends, tees, bends and hydrants shall be provided with thrust blocks as shown in the Standard Drawings.

   b. Concrete construction shall comply with ACI 301, Specifications for Structural Concrete.

   c. Concrete shall extend from fitting to undisturbed soil and shall be installed so that all joints are accessible.

   d. Concrete shall be placed and cured for 24 hours prior to energizing the water main.

   e. If adequate soil support cannot be obtained, a mechanical restraining assembly shall be installed as approved by the City Engineer.

7. Pipe Encasement, Straddle Blocks, and Trench Checks

   a. Total or partial encasement of pipe in concrete shall be used where the required safe supporting strength of the pipe cannot be obtained by other bedding methods. Concrete encasement shall also be provided at locations where there exists the possibility that standard bedding may be eroded by currents of water under and

around the pipe. Concrete construction shall comply with ACI 301, Specifications for Structural Concrete.

b. Concrete encasement shall be constructed at locations indicated and complying with details as shown on the Engineering Plans and in the Standard Drawings. Start and terminate encasement at a pipe joint. Adequately support and block the pipe to maintain position and prevent flotation. Form to dimensions indicated or construct full width of the trench.

   i. Longitudinal reinforcement shall be continuous.

   ii. Concrete encasement shall be protected and cured so as to prevent excessive evaporation of moisture or freezing. Backfilling will not be considered as a suitable method of curing the encasement.

   iii. Backfill trench only after concrete encasement has obtained a minimum of 2000 psi. All backfilling shall be done in accordance with Section 2100.

c. Straddle blocks shall be constructed at locations indicated on and comply with details shown on the Engineering Plans and in the Standard Drawings.

d. Trench Checks: Trench checks shall be located as shown on the plans. They shall consist of flowable backfill and extend 12 inches below the bottom of the pipe. Length shall be a minimum of 12 inches and width shall be the width of the trench. The height of the trench check shall extend to 12 inches above the top of the pipe.

8. Pipe Laying: All pipe installation shall comply with the pipe manufacturer's recommendations, except as modified herein.

   a. Pipe laying shall not proceed if the trench width as measured at the top of pipe exceeds the maximum allowable trench width. If this occurs, the Contractor shall submit to the Design Engineer and the City Engineer, for approval, a better bedding design for the pipe or pipe of sufficient strength to provide safe supporting strength.

   b. All pipe and fittings shall be stored and handled with care to prevent damage thereto. Do not use hooks to transport or handle pipe or fittings. Do not drop pipe or fittings.

   c. Pipe and fittings rejected by the Inspector shall be marked and removed from the project site. All pipe and fittings shall be examined for soundness and specification compliance prior to placement in the trench and rejected pipe or fittings shall not be incorporated into the pipeline. Check the class or pipe strength to be sure proper pipe is installed.

   d. Clean joint contact surfaces prior to jointing. Use lubricants, primers, or adhesives as recommended by the pipe or joint manufacturer. Keep lubricants and applicators clean.

e. Excavate bell holes for each pipe joint. When jointed, the pipe shall form a true and smooth pipeline.

f. The alignment of all pipelines shall be true to line and grade. The pipe shall be truly centered into the abutting pipe.

g. On transmission mains, the pipes and appurtenances shall be truly laid to line and grade throughout, all junctions and other pieces required shall be properly excavated for and laid as shown on the Drawings, and the following tolerances from true horizontal alignment and vertical grade shall be maintained:

Horizontal Alignment:	±12 inches
Vertical Grade:	± 0.1 feet

Pipe installed but not meeting these tolerances shall be ordered removed and replaced at the Contractor's expense.

h. The trench shall be excavated to sufficient depth to allow embedment to be placed in the bottom of all trenches. At the pipe joints, the trench shall be excavated to an additional depth so that the bell will not rest on the bottom of the trench, and all the weight of the pipe shall be evenly distributed along the entire length of the barrel of the pipe.

i. The water main must be made watertight at all points; any leaks or other defects discovered at any time before the final acceptance of the Work shall be immediately repaired or that portion of the water main shall be rebuilt if necessary.

j. In all cases, full length sticks of pipe shall be used, except in making closures.

k. Clean interior of all pipe, fittings, and joints prior to installation. To exclude entrance of foreign matter during discontinuance of installation, close open ends of pipe with snug fitting closures. Take reasonable precautions to not let water fill the open trench, and include provisions to prevent pipe flotation. Remove water, sand, mud, and other undesirable backfill materials from trench before removal of end cap.

l. In forming joints, each length of pipe shall be carefully aligned in such manner as to form an accurate concentric joint, thus providing a uniform circular pipe opening. Each length of pipe shall thrust into the bell and shall be securely held in position until the next length of pipe has been placed.

m. The pipeline trench excavation shall be dewatered sufficiently to allow pipe joints to be made under dry conditions. No joints shall be made under water.

n. Joints:

   i. Joints shall in general be made complying with the manufacturer's recommendations and as specified herein.

ii. Clean and lubricate all joint and gasket surfaces with lubricant recommended by pipe manufacturer.

iii. Care shall be exercised by the Contractor to insure against damage to joint material in storage, handling, or placing operations.

iv. No damaged joint material shall be permitted to be used and the same shall be removed from the job site.

v. All pipe joints shall be completed by insuring that the ends of the pipe to be joined are in contact and completely shoved into "home" position.

o. Pipe shall be cut in a neat workmanlike manner without damage to pipe. Cutting of pipe with a torch is not permitted. Smooth cut by power grinding to remove burrs and sharp edges. Repair the lining as required and approved by the Inspector.

p. All pipelines shall be plugged at the end of each day's progress. Plugs or other positive methods of sealing shall be utilized at all times to protect any existing system from entrance of stormwater or other foreign matter.

q. When a water main crosses an existing pipeline (sanitary sewer, storm sewer, service laterals or force mains) and the clearance is less than 18 inches, concrete encasement shall be required in a manner approved by the City's on-site representative.

9. Valves, Fittings, and Hydrants:

a. Valves, fittings, and hydrants shall be set and jointed to a new pipe in the manner specified for cleaning, laying, and jointing pipe.

b. Valves, fittings, hydrants, and pipe shall be supported in such a manner that there is no deflection in the valve or fitting-to-pipe joint. Larger valves and fittings may require additional support so that the pipe does not have to support the weight of the valve or fitting. In no case shall hollow pipe be used as a support mechanism.

c. Valve boxes and lids shall be installed over each valve. The valve box shall be supported in a manner to remain centered and plumb over the operating nut of the valve. The valve box shaft shall not transmit shock or stress to the valve. Valve box covers shall be installed flush with the finish grade, or as directed by the Inspector.

d. Hydrants:

i. Hydrants shall be installed as shown in the Standard Drawings.

ii. Hydrants shall be installed so that the steamer nozzle is 18 inches above final grade, and the bottom of the break-away coupling is 2 to 6 inches above final grade, as recommended by the hydrant's manufacturer.

iii. Hydrants shall stand plumb.

iv. The weep holes of the hydrant shall be kept clear and free to drain.

v. Refer to AWWA Manual M17 for additional installation guidelines.

10. Removal of Water: The Contractor shall provide dewatering as specified in Section 2103. Damaged pipe or structures of any kind resulting from insufficient dewatering facilities or similar lack of proper conduct of the work shall be replaced by the Contractor at their own expense. No structure or pipes shall be laid in water, and no water shall be allowed to run into or over any concrete work or pipe, or into or through any pipe.

11. Water Main Connections to Existing Main

    a. The Contractor/Developer shall furnish and install all of the fittings necessary for connections between new water mains and existing water mains. The use of tapping sleeves and valves is to be minimized and shall only be allowed where required on approved engineering drawings. The installation of tapping sleeves and valves shall be done while an Inspector is present.

        i. All tapping sleeves will be required to meet the following air test:

            - < 12-inch, hold 45 psi for 1 minute
            - ≥ 12-inch, hold 60 psi for 1 minute

        ii. Tapping into existing mains shall be done with no interruption of existing services unless otherwise approved by the City Engineer 48 hours prior to disruption of service.

    b. Valves on the existing water system or valves that separate newly constructed mains from the existing water system shall be operated by City staff. The Water Utilities Supervisor shall be notified prior to operating any valves.

    c. Special care should be taken when making a connection to an existing main. No foreign material or contaminants will be permitted to enter the water system.

    d. Thrust blocks shall be provided at the new connection to provide thrust restraint as shown in the Standard Drawings

12. Abandonment of Water Mains

    a. No existing water mains shall be abandoned prior to contacting Water Utilities Operations at least 48 hours in advance.

    b. Prior to abandonment of a water main, the Contractor shall verify that no existing services will be affected.

c. If a water main is indicated for abandonment, it shall be abandoned by removal and backfill if required or by plugging each end of the line segment. To plug each end of the line segment, a section of pipe at least 10 feet long shall be cut out of the existing line. The water shall be drained out to the fullest extent practicable, and the ends shall be sealed with a 1-foot thick plug of non-shrink grout sealed with a Portland cement grout.

d. Location of cut line and plugs shall be shown on the record drawings.

e. Hydrants (complete) shall be removed and returned to Water Utilities Operations.

13. Abandonment of Service Lines

a. Water Service Lines shall be abandoned when buildings are demolished and there are no re-development plans to reuse the existing tap.

b. For 2-inch and smaller water service lines that are connected to a water main with a service saddle (that is to remain in service), the water service line shall be abandoned by removing the corporation valve and replacing it with a plug.

c. For 2-inch and smaller water service lines that are connected to a water main without a service saddle (that is to remain in service), the water service line shall be abandoned by removing the corporation valve plugging the main using a stainless steel repair clamp.

d. For greater than 2-inch water service lines that are connected to a water main (that is to remain in service), the water service line shall be abandoned by removing the valve and installing a blind flange, severing the water service line within 2 feet of the valve, plugging the service line with concrete, removing the valve box, backfilling the hole left after removing the valve box, and repairing the surface. The valve box shall be returned to the Water Utilities Operations.

14. Protection of Water Supplies

a. There shall be no physical connection between a public or private potable water supply system and a sewer, or an appurtenance thereto, that would permit the passage of any wastewater or polluted water into the potable water supply.

b. For water mains paralleling or crossing sewer mains, see Paragraph 6901.D.1.c.

c. Water and sewer mains shall not be placed in the same trench or excavation.

15. Connection of Pipes of Dissimilar Materials: The connection of pipes of different materials shall be made using approved transition couplings, and shall provide a permanent and watertight connection that will withstand the hydrostatic test pressure.

C. Disinfection

1. General

    a. Precautions, methods, procedures and materials for disinfection shall comply with the current AWWA C651.

    b. Precaution shall be taken to protect the interior of pipes, fittings, and valves against contamination. Pipe shall be handled in such a manner to prevent the entrance of foreign material or water.

    c. All water mains shall be disinfected and tested. Not more than 4,000 feet of water main shall be installed without disinfecting and testing.

    d. The Contractor/Developer shall notify the Inspector at least 48 hours prior to commencing disinfection.

    e. Existing water distribution system valves shall be operated by City staff.

    f. Samples shall be taken at locations selected by the Inspector but not less than 1 sample shall be collected for every 1,200 feet of pipe, plus 1 sample from each dead end line, and at least 1 set from each branch. If trench water has entered the main, samples shall be collected every 200 feet.

    g. If the continuous feed method of chlorination is selected, bacteriological samples shall not be taken until the water mains have passed hydrostatic and leakage tests.

2. Filling: After installation, the entire main shall be completely filled with water to eliminate air and be flushed to remove any material that may have entered the main. Flushing velocities shall not be less than 3.0 feet per second.

    a. If the continuous feed method of chlorination is selected, the filling and flushing shall be done prior to chlorination.

    b. If the tablet method of chlorination is selected, the filling shall be done very slowly (i.e., less than 1 ft/s) and in the presence of the Inspector. The water main shall be flushed after it has been chlorinated.

3. Chlorination: Chlorination shall comply with the procedures given in AWWA C651, as modified below.

    a. The tablet method may only be used under the following conditions:

        i. The water main to be chlorinated is 12 inches in diameter or less,
        ii. Calcium hypochlorite granules are used (i.e., not tablets), and
        iii. The pipes and appurtenances are kept clean and dry during construction.

    b. The tablet method shall not be used if nonpotable water or foreign materials have entered the mains or if the water temperature is below 5°C (41°F).

    c. The slug method may only be used with prior permission from the City Engineer.

d. Cutting into or Repairing Existing Water Mains:

   i. Disinfection procedures when cutting into or repairing existing water mains shall comply with AWWA C651.

   ii. This procedure shall only be used if the length of pipe to be disinfected is less than 150 feet, unless otherwise approved by the City Engineer.

e. A basic flow chart for the chlorination process is given in Figure 3901-1 and is further described below.

   i. Chlorinate water main and measure chlorine at the ends of the water main and ends of all branches. A minimum of 25 milligrams per liter (mg/l) free chlorine should be detected at each location, or additional chlorination is required until that level is reached.

   ii. When acceptable chlorine levels are detected at all points, the Contractor/Developer shall operate all valves and hydrants within the newly-constructed section (except for the valve tying the new construction to the City's distribution system) in order to disinfect appurtenances.

   iii. The chlorinated water shall be retained in the water main for at least 24 hours.

   iv. If the required minimum residual of 10 mg/l chlorine is not present in all portions of the water main after 24 hours, rechlorinate the water main.

   v. If the required minimum residual of 10 mg/l chlorine is present in all portions of the water main, flush the water main until chlorine measurements show the water leaving the test main are no higher than that prevailing in the system.

   vi. Disposal of Heavily-Chlorinated Water: The heavily-chlorinated flush water shall be discharged to a sanitary sewer, or the flush water shall be dechlorinated in a manner complying with AWWA C651, Appendix C. If the flush water is to be discharged to the sanitary sewer, the Contractor/Developer will be charged for the disposal of the quantity of water disposed.

   vii. Samples shall be taken of water that has stood in the main for at least 16 hours after final flushing has been completed and shall be tested by a state-certified laboratory, as approved by the City, for bacteriological quality complying with "Standard Methods for the Examination of Water and Wastewater." The samples shall meet the MDNR standard.

   viii. Samples for bacteriological testing shall be taken through a corporation stop and copper tubing.

   ix. The first set of bacteriological samples will be taken under the direction of the Inspector, who will take this and all subsequent samples to the laboratory.

x. The laboratory shall be one certified by MDNR for microbiological analyses.

xi. If the results are acceptable from the first samples (taken on Day 3), a second set of samples will be taken under the direction of the Inspector.

xii. If the results for the second set of samples (taken on Day 4) are acceptable, the laboratory shall provide a hard copy of the lab results to the Inspector.

xiii. If the results are not acceptable from the first set of samples, (taken on Day 3) the Contractor shall follow the procedure shown in the flow chart in Figure 3901-1 to flush and/or rechlorinate the water main until acceptable test results are achieved.

xiv. If the results are not acceptable from the second set of samples, the Contractor shall follow the procedure shown in the flow chart in Figure 3901-1 to re-chlorinate the water main (beginning at Day 1) until acceptable results are achieved.

D. Hydrostatic and Leakage Testing

1. Hydrostatic pressure and leakage testing shall be performed by the Contractor/Developer in the presence of the Inspector and shall comply with current AWWA C600 and C605 procedures for DI and PVC pipe, respectively. The Contractor/Developer shall supply all pipe, tools, and equipment necessary to operate the test.

2. The hydrostatic pressure during testing shall be:

   a. At least 125 percent of normal operating pressure at the highest elevation of the test section.

   b. At least 150 percent of normal operating pressure at the lowest elevation of the test section.

   c. At least 150 psi throughout the test section.

3. The leakage test shall be conducted concurrently with the pressure test. A DIP pipeline is acceptable if the leakage does not exceed the allowable limits as determined by the following formula:

$$L = SD\,(P)^{1/2}/148{,}000$$

where

L = testing allowance (makeup water), gallons per hour
S = length of pipe tested, feet
D = nominal diameter of pipe, inches
P = average test pressure during hydrostatic test, psig

4. A PVC pipeline is acceptable if the leakage does not exceed the allowable limits as determined by the following formula:

   $$L = ND\,(P)^{1/2}/7{,}400$$

   where

   L = allowable leakage, gallons per hour
   N = number of joints in the length of pipe tested
   D = nominal diameter of pipe, inches
   P = average test pressure during leakage test, psi

5. Water mains that fail to meet the test standards shall be repaired and retested, at the expense of the Contractor/Developer, as necessary, until the test requirements are met. Not more than 4,000 feet of main shall be installed without testing.

6. Fire lines shall be hydrostatically tested at not less than 200 psi for 2 hours.

3903 ACCEPTABLE MANUFACTURERS AND MODELS

A. General: A list of acceptable manufacturers and models for various materials will be maintained by the City Engineer and updated on a regular basis. An approved list of materials can be found on the City's web site www.cityofls.net. Go to Development, then Development Regulations, then Design and Construction Manual.

Figure 3901-1. Chlorination Flow Chart

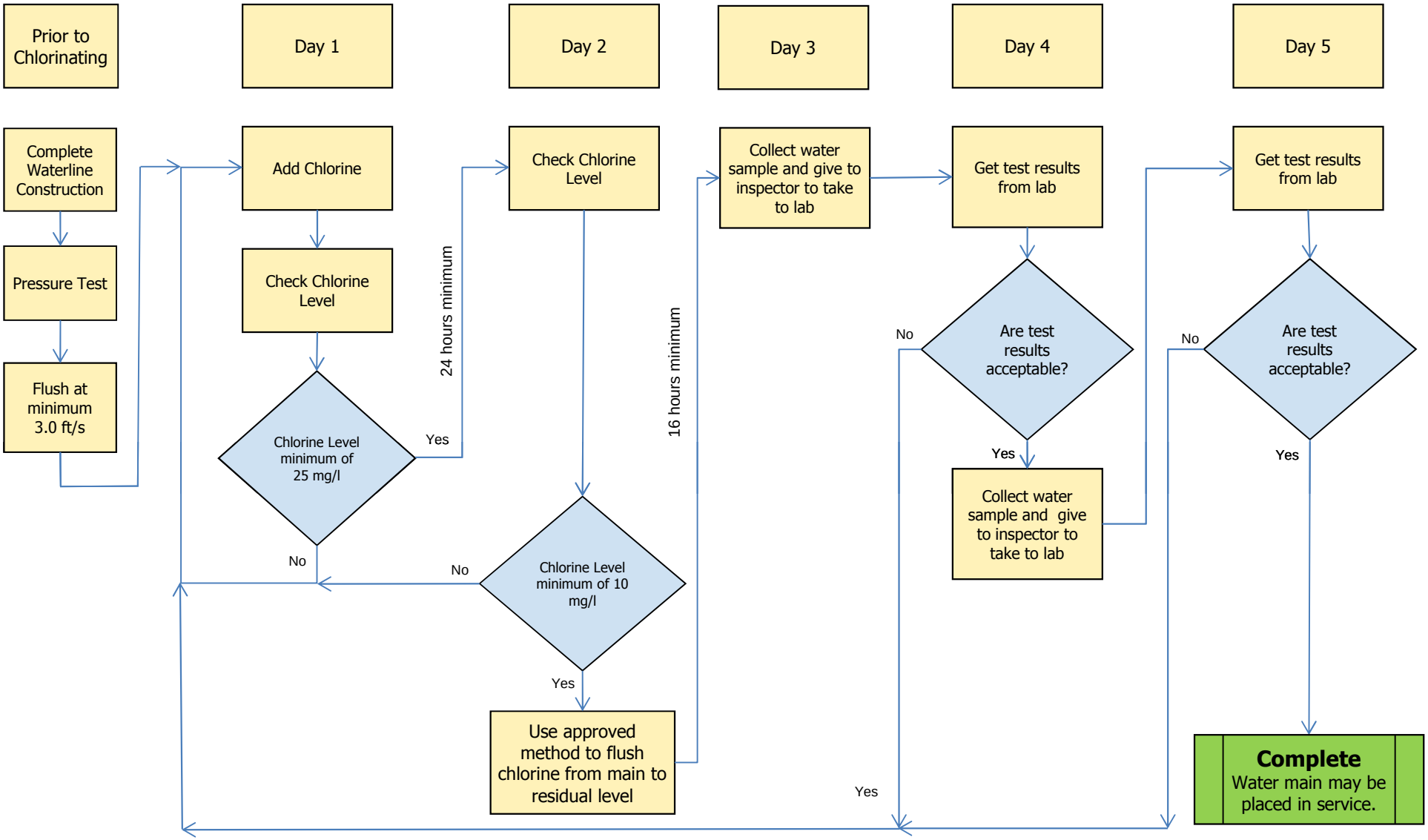

Rev 01/06/16

SECTION 5100 - EROSION AND SEDIMENT CONTROL

CITY OF LEE'S SUMMIT, MISSOURI
DESIGN CRITERIA

The City of Lee's Summit, Missouri's hereby adopts Section 5100 of the Kansas City Metropolitan Chapter of APWA Design Criteria, current edition.

DIVISION V
SECTION 5100
EROSION AND SEDIMENT CONTROL

(September 15, 2010)

DIVISION V
DESIGN CRITERIA

5100 EROSION AND SEDIMENT CONTROL

APPROVED AND ADOPTED THIS 15 DAY OF SEPTEMBER 2010

KANSAS CITY METROPOLITAN CHAPTER
OF THE AMERICAN PUBLIC WORKS ASSOCIATION

TABLE OF CONTENTS

Section Page

SECTION 5101 ADMINISTRATIVE....1
5101.1 Scope....1
5101.2 Relationship of Erosion and Sediment Control Plans to the SWPPP....1
5101.3 Reference Documents....1
5101.4 Designer Qualifications....1
5101.5 Innovative Products and Methods....2

SECTION 5102 EROSION CONTROL GENERALLY & DESIGN APPROACHES....2
5102.1 Mechanics of Soil Loss....2
5102.2 The A.R.T. of Erosion Control....2
5102.3 Multiple Design Approaches Provided....3
5102.4 Design by Performance Goals....3
5102.5 Sequence Based Drawings....3
5102.6 Checklist....3
5102.7 Sample Applications....3
5102.8 BMP Fact Sheets....3

SECTION 5103 PERFORMANCE GOALS....4
5103.1 General....4
5103.2 Protect Undisturbed Areas....4
5103.3 Divert Flow Away from Exposed Ground....4
5103.4 Treat Runoff to Remove Sediment....4
5103.5 Provide Effective Cover....4
5103.6 Limit Duration of Exposure....4
5103.7 Provide Erosion Resistant Conveyances....5
5103.8 Protect Steep Slopes....5

SECTION 5104 PLAN PRESENTATION....5
5104.1 General....5
5104.2 Written Sequence Required....5
5104.3 Drawing Conventions:....5
5104.4 Site Assessment....5
5104.5 Phased Erosion Control Drawings....5
5104.6 Pre-Clearing Drawing....6
5104.7 Sediment Basin Embankment and Spillway Detail....6
5104.8 Sediment Trap Detail....6
5104.9 Inactive Area Stabilization Drawings....7
5104.10 Final restoration Drawing....7

SECTION 5105 DESIGN CHECKLIST....8

5105.1 General 8

SECTION 5106 SAMPLE APPLICATIONS BY PROJECT TYPE 16
5106.1 General 16
5106.2 Large Land Development 16
5106.3 Small and Medium Site Construction 18
5106.4 Roadway 19
5106.5 Utility Main Extension 21
5106.6 Commercial Borrow or Fill Site 22

SECTION 5107 ACCESS LIMITS AND CONTRACTOR AREAS 23
5107.1 General 23
5107.2 Contractor Areas 23
5107.3 Isolation of Areas to Remain Undisturbed 23
5107.4 Isolation of Inactive Area 24
5107.5 Stockpiles 24

SECTION 5108 SEDIMENT CONTROL 24
5108.1 General 24
5108.2 Hydraulic Loading Limits 24
5108.3 Sediment Basin 24
5108.4 Sediment Trap 24
5108.5 Silt Fence 24
5108.6 Other Linear Sediment Control Devices 25
5108.7 Inlet Protection 25

SECTION 5109 SEDIMENT BASIN 26
5109.1 General 26
5109.2 Placement Restrictions 26
5109.3 Embankment 26
5109.4 Volume 26
5109.5 Surface Area/ Shape Factor 26
5109.6 Dewatering 27

SECTION 5110 RUNOFF CONTROL 30
5110.1 General 30
5110.2 Stream Stabilization Measures 30
5110.3 Diversion Dikes, Gradient Terrace, and Slope Drains 30
5110.4 Erosion Resistant Construction Zone Conveyance 30
5110.5 Water Bar 31
5110.6 Outlet protection 31

SECTION 5111 INACTIVE AREA RESTORATION 31
5111.1 General 31
5111.2 Inactive Area Defined 31
5111.3 Inactive Area Approved Cover Types 31
5111.4 Steep Slope BMPs 32
5111.5 Interruption of Interior Slopes 32
5111.6 Interior Sediment Control 32
5111.7 Topsoiling 32

* * * * *

LIST OF FIGURES

Figure Page

1 Relationship Between Sediment Basin Design Elevations 29

* * * * *

LIST OF TABLES

Table Page

1 Erosion and Sediment Control Checklist 8
2 Checklist for Sediment Basin Detail 13
3 Checklist for Sediment Trap Detail 14
4 Load Rates for Sediment Controls 14
5 Stable Conveyance Types 15
6 Approved Cover Types 15

DIVISION V
DESIGN CRITERIA

SECTION 5100 EROSION AND SEDIMENT CONTROL

SECTION 5101 ADMINISTRATIVE

5101.1 Scope

This chapter is directed toward the project designer to guide the preparation of construction phase erosion control drawings.

5101.2 Relationship of Erosion and Sediment Control Plans to the SWPPP

A Storm Water Pollution Prevention Plan, or SWPPP, is required for State permits. The drawings and written sequences described in this guideline should be part of the SWPPP. The SWPPP includes additional documentation created before and during the execution of the project. Refer to the general permit for the State in which the project is located for additional requirements.

5101.3 Reference Documents

This chapter provides mandatory requirements on the application of certain BMPs. Additional considerations on those and additional BMPs, as well as background information on erosion and sedimentation, are available in numerous other sources. The following references are recommended as sources of supplemental guidance and information.

A. Information on the regulatory background, scientific state of the art, and minimum control measures for erosion control may be found in the Environmental Protection Agency document *National Management Measures to Control Nonpoint Source Pollution from Urban Areas. Management Measure 8: Construction Site Erosion, Sediment, and Chemical Control*. (November 2005, EPA-841-B-05-004).

B. Information about SWPPP including site analysis, BMP selection, notification, placement, and maintenance, record keeping and permit termination may be found in the Environmental Protection Agency document *Developing Your Stormwater Pollution Prevention Plan, A Guide for Construction Sites*. (April 2007, EPA 833-R-060-04).

C. Fact sheets describing the applicability, limitations, maintenance, effectiveness and cost of individual BMPs may be found on the EPA website: *National Menu of Best Management Practices; Construction Site Stormwater Runoff Control*, http://cfpub1.epa.gov/npdes/stormwater/menuofbmps/ or current URL.

D. Information on the mechanics of erosion and sedimentation, fact sheets describing the applicability, limitations, maintenance and cost of individual BMPs, and information on water quality management, all within the particular context of Missouri and Kansas water quality concerns, may be found in *Protecting Water Quality a Construction Site Water Quality Field Guide*, a joint document issued by the St. Charles County Soil and Water Conservation District, Missouri Department of Natural Resources, Mid America Association of Conservation Districts, et al.

5101.4 Designer Qualifications

The design and plan preparation for erosion control drawings and written sequence shall be completed by, or under the direct supervision of, a professional engineer who also meets one of the following the minimum continuing education requirements:

A. 7 hours within the last 24 months of classroom instruction in sediment and erosion control taught by a qualified instructor.

B. 21 hours lifetime of classroom instruction in sediment and erosion control taught by a qualified instructor.

C. 14 hours lifetime of web-based or classroom instruction, which includes specific instruction on the general permit requirements and SWPPP preparation, when retention of the material is measured by an exam.

5101.5 Innovative Products and Methods

Erosion control is an evolving field and new products and methods are emerging. Obtain approval from the municipal authority prior to using a new product or method in the design. The protocol for proposing innovative products and methods includes:

A. Submit research based evaluation: A proposal for an innovative product or method shall include quantitative research of the performance of the product or method evaluated against a control. Research may be sponsored by the manufacturer. Submit the research paper.

B. Research paper shall include a summary indicating the value range under which the product or method was evaluated and found to be effective. Information shall contain sufficient detail to determine whether the proposed application is indicated.

C. Information shall include the removal efficiency of the product or method.

SECTION 5102 EROSION CONTROL GENERALLY & DESIGN APPROACHES

5102.1 Mechanics of Soil Loss

The first step in design of erosion control is a basic understanding of soil loss. There are three separate ways in which soil loss occurs.

A. Sheet and Rill Erosion. Sheet erosion is relatively uniform erosion of the soil surface. Rill erosion occurs when runoff concentrates in small channels (rills). The Revised Universal Soil Loss Equation (RUSLE) predicts loss from sheet and rill erosion. It lists a number of factors that influence soil loss. The factors that the designer and contractor have the most control over are the type of cover, the duration of exposure, and the steepness and length of slope.

B. Gulley and Channel Erosion: Erosion of a gully or channel occurs when the applied shear stress from flowing water exceeds the shear resistance of the channel bed. Once bed erosion is deep enough, slope instability may cause mass wasting of the bank into the flow path. Water readily washes out this loose material. In addition to shear resistance, the frequency, duration and volume of flow affect how much material is lost. The problem can be addressed directly by reducing applied shear or increasing shear resistance or indirectly by reducing the volume and frequency of flow by up-slope diversion.

C. Wind Erosion: In the Kansas City metro area, cohesive soils, moderate annual rainfall, and considerable tree cover all reduce potential wind erosion. Good erosion control for sheet and rill erosion will also control for wind erosion. Wind erosion is generally not a separate design concern.

5102.2 The A.R.T. of Erosion Control

At the highest conceptual level there are three strategies for reducing erosion on a construction site. Kansas City area soils tend to be clay based and slow to settle out of suspension. As a result, common sediment recapture BMPs have low removal efficiencies and emphasis should be on avoidance and reinforcement techniques.

A. Avoid. Remove or reduce one of the factors that contribute to erosion. Techniques include avoiding silty soils, restricting access to undisturbed or restored areas, timing short term stream crossing to reduce the probability of rainfall impacting the construction, reducing the duration of exposure through management of the construction sequence, reducing flow velocities with check dams or flatter flowline slopes, diverting clean water, and reducing slope lengths with redistributive slope interrupts. Surface roughening can reduce the volume and velocity of sheet flow.

B. Reinforce. Increase the resistance of the soil surface or channel bed against erosion. Techniques include channel lining and ground covers such as temporary vegetation, mulches, erosion control blankets, or pavement.

C. Treat. Remove sediment from stormwater exiting the construction site by filtering or settling. Settling is often used in combination with a diversion system to collect and transport silt laden water to a central treatment pool. Common treatment techniques can recapture only the courser soil particles, so emphasis should be on avoidance and reinforcement.

5102.3 Multiple Design Approaches Provided

There is no single optimal approach for design of erosion control plans. This guideline presents several different approaches. The approaches overlap. As a result there is a certain amount of repeated information among the different sections of the guideline.

5102.4 Design by Performance Goals

This approach consists of a list of short statements of general principles to achieve in an erosion control plan. These are a more pragmatic restatement of the A.R.T. strategies; but they are still general in nature. They are educational and informative. They help illuminate the function each BMP might serve. Design principles can be used to evaluate the adequacy of a design; but they may lack the specificity necessary for regulatory purposes. Lists and exact statements of design principles vary. *Section 5153 Performance Goals* provides one such list.

5102.5 Sequence Based Drawings

Limiting duration of bare soil is one of the most powerful avoidance tools – and historically one of the least appreciated by the local construction industry. This design process produces a series of "snapshots" of site conditions to illustrate how BMPs change during the project. Each "snapshot" is tied to a construction milestone, reinforcing the requirement to manage the construction schedule. This approach tends to be rote and directive, it does not offer insight into why BMPs are selected. *Section 5154 Plan Presentation* is an example of this design process.

5102.6 Checklist

This method consists of an evaluation form for the quality assurance officer or municipal reviewer to determine that appropriate BMPs have been applied in sufficient measure to meet permit requirements. It is narrowly focused and very directive in nature. It offers no insight into why BMPs are selected and only limited criteria to select among BMPs with similar functions. *Section 5155 Design Checklist* is a sample of this design method.

5102.7 Sample Applications

This approach examines BMPs applied to a similar project in an attempt to stimulate ideas for the current project. It applies the A.R.T. strategies to the particular opportunities and constraints intrinsic in a specific type of construction. It is suggestive and informative rather than directive. *Section 5156 Sample Applications by Project Type* provides discussions of typical construction projects.

5102.8 BMP Fact Sheets

This approach lists all erosion control BMPs available along with a summary of their applicability, performance parameters and limitations. The designer selects those that are applicable to the project and the site. This addresses the sizing and spacing concerns but does not address the larger conceptual concerns. This method provides limited means to evaluate the adequacy of the overall plan. Sources for BMP information follow.

A. *Sections 5157 through 5161* identify the most common and effective BMPs. They include definitions and give abbreviated applicability and site placement information. They do not include installation information, removal efficiencies and cost data typical of other fact sheets.

B. The National Menu of Best Management Practices; Construction Site Stormwater Runoff Control and Protecting Water Quality a Construction Site Water Quality Field Guide, all cited in Section 5151

Administrative, include detailed discussions of applicability and limitations, removal efficiencies, and cost data of common BMPs. These contain more complete information than do the BMP descriptions in Sections 5157 through 5161.

SECTION 5103 PERFORMANCE GOALS

5103.1 General

This section provides a high-level overview of basic sediment and erosion control principles. It also serves as an introduction to erosion control techniques.

5103.2 Protect Undisturbed Areas

Areas planned to remain undisturbed throughout construction may include stream corridors, wetlands, and native areas to be used as amenities or post-construction BMPs. Other areas to avoid include zones where grading is complete and the ground has been reseeded. These areas should be fenced to avoid damage by construction traffic.

5103.3 Divert Flow Away from Exposed Ground

There are two distinct applications of diversion. First, clean water from off-site or restored areas can be diverted away from disturbed areas. Second, steep slopes should have water diverted away from the top of slope until the vegetation is established.

5103.4 Treat Runoff to Remove Sediment

There are two general locations for sediment treatment. First, flow should be treated at the down-slope limit of construction prior to release from the site. Some combination of linear sediment control or a settlement pool with an associated conveyance system should be used. Second, runoff from steep slopes should be treated at the toe of the slope; generally some linear sediment control device is used. Steep slopes that have more than 10 foot change in elevation from toe to top should have intermediate linear sediment control that will interrupt and redistribute the flow.

5103.5 Provide Effective Cover

Timely placement of erosion resistant cover reduces erosion on areas where grading has ceased. Approved non-living cover is effective immediately. Seeded areas need protection during the establishment period. Mulches provide immediate erosion protection and a hospitable micro-environment for seed germination. If the slopes are long, then seeded areas need devices that will interrupt and redistribute the flow across the slope.

5103.6 Limit Duration of Exposure

A low cost and effective way of reducing erosion is to control the sequence in which clearing, grading and restoration activities are scheduled. Examples:

A. If portions of the work can be completed before mass grading, delay clearing the rest of the site until grading is actually needed.

B. Progressive clearing – on sites over 10 acres clear only a portion of the site at a time. Grade and stabilize a portion of that before clearing more land. Maintain the active work area at less than 10 acres whenever possible. If progressive clearing is infeasible for the project, negotiate with the reviewing municipality for how to provide substantial limitation of duration, such as a defined maximum exposure time.

C. Whenever there is a pause or change in the location of grading or excavation, stabilize the parts of the site just vacated.

D. Some crossings of a stream or swale can be completed in a few days. Coordinate that work with the weather forecast so it can be finished before the next predicted rainfall.

E. Some post-construction BMPs are sensitive to sediment accumulation. Do not install these until the remainder of the site is stabilized.

5103.7 Provide Erosion Resistant Conveyances

Bare earth should be protected from concentrated flows. Check dams can be used to reduce velocity and lower shear stress. Erosion resistant linings provide a high level of shear resistance. Use of pipes eliminates soil exposure to running water – either permanent storm sewer or temporary pipes may be used.

5103.8 Protect Steep Slopes

Steep slopes are especially prone to erosion. Steep, seeded slopes benefit from the use of highly effective mulch, slope interrupts, diversion of water at the top of slope, and sediment treatment adjacent to the toe of the slope.

SECTION 5104 PLAN PRESENTATION

5104.1 General

This section describes the types of drawings that are generally necessary to convey the time sensitive nature of erosion control design.

5104.2 Written Sequence Required

Management of the construction schedule is a separate, non-structural BMP recognized by the EPA. Erosion control plans must have a written sequence. See *Section 5156 Sample Applications by Project Type* for typical sequences.

5104.3 Drawing Conventions:

A. Provide only the background information necessary to orient the BMP installation on the site,

B. Identify each type of BMP on a graphic legend on each drawing,

C. All items should be shown to scale and in their proper location.

D. Controls that are linear should be show by a unique line type.

E. Cover type or status of an area (such as undisturbed or active work zone) should be shown as a unique pattern with or without a boundary line. Areas should not be shown with only a boundary line only.

F. Each erosion control device that is to be removed should be specifically designated.

5104.4 Site Assessment

A site assessment is required for the SWPPP. A site analysis shall consist of both text and drawings.

A. Written information typically includes the location, nature and size of the development; the location and nature of the receiving waters; changes to the discharge from the site; the soil type and identification of highly-erodibility soil.

B. Drawings typically show the property limits; the proposed limits of the disturbed area; identification of concentrated flow paths; identification of where runoff enters and exits the site; and a slope analysis. The slope analysis should classify the slope uphill from the limit of disturbance as short or long. Short slopes have catchment lengths less than 75' for slopes flatter than 5%, or lengths less than 50' for slopes greater than 5%.

C. The reference document, *Developing Your Stormwater Pollution Prevention Plan, A Guide for Construction Sites*, as well as the Kansas and Missouri general permits provide additional guidance for the content of the site assessment.

5104.5 Phased Erosion Control Drawings

Erosion control at significant construction milestones should be shown on separate drawings. Milestone is defined in *5155 Design Checklis*t. Erosion control milestones common to most construction projects are work to be done prior to general clearing of the site, BMPs applied to inactive areas once mass grading or some other project milestone is

reached, and final restoration/end of construction sequence. Supplemental plans of sediment basins, early work areas, and post-construction water quality facilities may also be needed. See *Section 5156 Sample Applications by Project Type* for phasing considerations.

5104.6 Pre-Clearing Drawing

This drawing shows the controls to be installed prior to general clearing of the site. The background drawing should show the existing contours, adjacent streets, right of way, easements and property lines. Do not show final contours on this drawing. Commercial developments may also show the footprint of the primary building for reference. Show the BMPs selected for the following:

A. Access barriers for areas to remain undisturbed.

B. Down-slope perimeter sediment control.

C. Runoff controls.

D. Cover to be placed on contractor areas.

E. Limits of work for each early work opportunity. Include a separate pre-clearing plan for each early work opportunity.

5104.7 Sediment Basin Embankment and Spillway Detail

Whenever a sediment basin is used the erosion control drawings shall include a detail for each basin showing:

A. Existing contours at the site of the basin.

B. Proposed contours for the embankment, basin excavation if any, and emergency spillway.

C. The cover to be placed on the embankment, both interior and exterior side slopes.

D. Pond limits and the actual pond volume calculated to the elevation of the top of riser; drainage area and required pond volume.

E. Maximum pond limits at 4% design storm are shown at their approach to roads, structures and utilities.

F. Spot elevations on top of riser, flowline of control section of overflow spillway, water elevation in pond at 50% and 4% design storm release rates, and top of embankment “as constructed” and “as settled”. Location and spot elevation of sediment removal marker.

G. The size and number of dewatering holes per row on the riser, the row spacing and the elevation of the lowest row of dewatering holes.

H. Cross sections of open channel overflow conveyance control section and exit channel. Lining requirements of exit channel.

5104.8 Sediment Trap Detail

Whenever a sediment trap is used the erosion control drawings shall include a detail for each trap showing:

A. Existing contours at the site of the trap.

B. Proposed contours for the embankment and trap excavation if any, and overflow route.

C. The as constructed and as settled elevation of the embankment. The volume of the trap, measured to the lowest overflow elevation on the as settled crest. The extend of ponding at the overflow elevation.

D. The cover to be placed on the embankment, both interior and exterior side slopes.

E. Location of rock section of the embankment to serve as an outlet.

F. Location and spot elevation of sediment removal marker.

5104.9 Inactive Area Stabilization Drawings

These drawings identify the inactive areas and show the site condition at significant milestones in the excavation and grading work. The background drawing should show property lines and easements, storm sewer system and contours as they will exist at the construction milestone portrayed. Commercial lot development may also show the footprint of the primary building for reference. Do not show other improvements to be constructed subsequent to stabilization of inactive areas. Other content:

A. Disposition of the contractor areas, perimeter controls and construction phase runoff conveyance systems shown on the pre-clearing drawing or previous inactive area stabilization drawing.

B. Show steep slope protection. Show the separate elements of steep slope protection including extent and type of mulch, top of slope diversion, sediment control near toe of slope, slope interrupts, and slope drains if included.

C. Show stabilization for stormwater channels that could not be built prior to general grading.

D. Show type and extent of stabilization of areas that will be inactive during subsequent construction. An effective design will have each location on the site identified as one of the following:

   1. An active work zone,
   2. A non-disturbed area,
   3. Identified mud free surface in contractor areas,
   4. Identified cover on a restored inactive area, or
   5. Sediment trap, sediment basin, or stable open channel conveyance.

E. Show barriers separating active work zone and inactive areas stabilized by planting, blankets or mulch.

F. Show slope interrupts and inlet protection.

5104.10 Final restoration Drawing

This drawing shows the site condition immediately after placement of final stabilization but before seeded cover is established. The background drawing should show final contours, property lines and easements, permanent storm sewer system and outlet protection, and permanent at grade and above ground construction. Do not show underground utilities other than storm sewer. Other content:

A. Retain BMPs for down-slope perimeter sediment control of seeded areas,

B. Show removal of contractor areas and construction access. Show removal of all temporary access barriers,

C. Show extent of topsoil placement if any. This may require a separate view,

D. Show type and extent of cover in all areas,

E. Show limits of post construction BMP installation. Include a requirement in the written sequence that installation shall only occur after all vegetative cover is established. Note – only infiltration and retention type BMPs require delayed installation

F. Provide text that requires removal of sediment trap or basin and perimeter diversion ditch and also requires stabilization of those areas once vegetative cover is established. Identify the cover to be applied to stabilize area disturbed by removal of temporary BMPs.

SECTION 5105 DESIGN CHECKLIST

5105.1 General

This section provides checklists and tables that may be used for quality assurance reviews. Although generally redundant with the rest of the design guidelines some requirements are contained only in this section.

A. Interpretation: This checklist is intended to be a tool to evaluate whether the erosion and sediment control plans meet these design guidelines. To that end a literal interpretation is encouraged. However, complete compliance may not be possible to achieve on all sites. In such a case the rule of evaluation should be that the maximum practicable compliance has been achieved for the performance goals in *Section 5153 Performance Goals.*

B. Definitions: Where found in the checklist the following terms have specific meanings indicated:

1. Catchment length: The distance that a drop of water travels between the uphill ridgeline and a linear control.
2. Contractor area: defined in Section 5153 Access Limits and Contractor Areas
3. Early work opportunity: Work that may be conducted prior to mass grading without affecting the overall duration of the project.
4. Inactive area: Any part of the project site that may be reasonably managed by the contractor to not require further construction for a 14 days or longer. The need for subsequent construction at a location does not affect the inactive status so long as the delay is reasonably expected to be 14 days. Inactive areas usually occur whenever there is a change in the contractor's use of the site.
5. Milestone: An identifiable point in the project schedule when the contractor's use of any portion of the site pauses, changes or may pause or change. Typical milestones that may affect erosion control needs are the beginning or completion of mass grading, building "top out" on small or medium site construction, or traffic routing phases on roadway projects. (Linear pipeline projects have nearly daily changes of the work zone; for linear projects a single drawing with a specialized construction sequence will convey multiple milestones.)

Table 1

Erosion and Sediment Control Checklist

General	
1	A series of erosion control drawings is provided. Each drawing is related to a milestone in the contractor's use of the site. Exceptions include linear projects, such as a utility extension, or sites under one acre; these may have a single drawing. Single family home site may use a standard template rather than a custom drawing.
2	Designer is a P.E. with relevant continuing education in erosion and sediment control.
3	A written construction sequence is included on the erosion control plans.
Specifications	
4	The project specification addresses the inspection and maintenance of the BMPs used. Use of APWA 2150 satisfies this requirement.
5	The project specification addresses pollution prevention through good housekeeping, including spill response. Use of APWA 2150 satisfies this requirement.

Table 1

Erosion and Sediment Control Checklist

Site Analysis	
6	A separate site analysis is provided. The site analysis includes both a written project description and a drawing analyzing flow patterns and slope lengths based on existing contours.
7	The written description identifies the location, nature and size of the project and the size of the area to be disturbed.
8	The written description identifies sensitive or impaired downstream waters, as defined by a government entity.
9	The written description identifies the soil type on the project site and highlights highly erodible soil types.
10	The drawings indicate the limit of the proposed disturbance. The entire length of the downslope limit of disturbance is identified.
11	The drawings identify catchment lengths at the down-slope perimeter of disturbance as either long or short slope lengths. Short slopes have catchment lengths less than 75' for slope less than 5%, or lengths less than 50' for slope greater than 5%.
12	The drawings locate all concentrated flow paths entering, crossing or exiting the site. A concentrated flow path is any flowline, swale, or line marked by a reversal of side slopes that has a drainage area greater than 0.5 acres.
13	The drawings show drainage area for upstream sheet flow entering the site.
Form of Drawings	
14	Background drawing shows contours in place at the milestone depicted. In general, no other contours are shown.
15	Background drawing shows only the permanent construction that is in place at the milestone depicted. Background drawing shows sufficient property line, R.O.W., baseline, building footprint or other alignment information to establish locations of BMPs.
16	Lines and patterns used to indicate BMPs are identified in a graphic legend.
17	Erosion controls to be removed at the depicted milestone are identified individually by leader note.
18	All items are shown to scale and in their scale accurate position.
19	All BMPs are located within the property limits or construction easements of the project.
Protection of Undisturbed Areas	
20	Pre-clearing plans and subsequent plans show access barrier between active work areas and areas to remain undisturbed.
21	Inactive area stabilization plans show access barrier between work zones and seeded areas stabilized by blankets, mulch, or spray applied mulch.
22	Construction fence is used for the access barrier where the undisturbed area is in response to regulation, i.e. stream buffer or native area used as post construction water quality BMP. Otherwise rope line or permanent curb may be used.
Perimeter Sediment Control	
23	Perimeter sediment control devices are shown on pre-clearing plan and inactive area stabilization plans.
24	The entire down-slope perimeter has a sediment control BMP identified; and the BMPs selected meet the loading limits of *Table 4, Load Rates for Sediment Control*.
25	There is a detail plan for each sediment basin or sediment trap, and the plan passes the appropriate checklist.

Table 1

Erosion and Sediment Control Checklist

26	There is a grading detail for the pit accompanying each inlet used as perimeter sediment control. The cut slopes do not exceed 2:1; and storage volume of pit is not less than 950 cf/acre.
27	The elevation of the silt fence does not vary by more than 1.0 feet throughout its treatment length, and the ends are returned uphill a minimum of 1.5 feet higher than the treatment length.
28	Other linear sediment control devices are located generally along a contour and the ends are returned uphill.
29	Vegetative buffers have a minimum width of 10 feet. Vegetative buffers may be located in any orientation to the contour. Vegetative buffers are protected by an access barrier – except for linear projects where the width of vegetative buffer is at least as wide as the work zone the access barrier is optional.
Runoff Control	
30	To the extent practicable, flows from undisturbed upstream areas are collected and transported around or through the site unmingled with silt laden water. Diverted flow is transported in a continuous erosion resistant conveyance system.
31	To the extent practicable, runoff control devices are shown on pre-clearing plan. Pre-clearing installation may not be practicable in the following conditions: 1. Top slope diversion on embankment fill slopes, 2. Where deep fills will significantly alter the drainage pattern.
32	Where runoff control could not be placed prior to clearing, the first applicable inactive area stabilization plan shows said runoff control devices.
33	To the extent practicable, concentrated flows within the limits of disturbance with drainage area greater than 0.5 acre are collected and transported in a continuous conveyance system.
34	Conveyances for the continuous conveyance system are approved in *Table 5, Stable Conveyance Types*, and any limiting requirement is met.
35	Outlet protection at the discharge point for the conveyance system is approved in *Table 5, Stable Conveyance Types*, and any limiting requirement is met.
36	Where check dams are used they are spaced so the elevation of the bottom of the upper check dam is at the same elevation as or lower than the top of the lower check dam. In lieu of requiring profiles for evaluation of spacing, the alternate review standard is that the plan view shall show the change in the channel flowline between adjacent check dams to be 2 feet or less.
37	Water bars are used on linear projects wherever the fall line of the ground is within 45° of the centerline of the trench. Water bar is constructed from earth, compost berm, gravel berm, compost sock or silt fence. Water bars terminate in vegetative buffer and runoff does not re-enter trench zone. Water bars are spaced less than 50 feet apart.
Stabilization of Steep Slopes. A steep slope is any slope that is both steeper than 15% and has a difference in elevation between toe and top greater than 3 feet.	
38	Steep slope protection is shown on the inactive area stabilization plan.
39	Water is diverted from the top of slope by a diversion dike or by use of adverse grade at the top of slope. Diverted water is transported in a continuous conveyance system and discharged onto a stable area.
40	Cover type is approved for "all slopes" in *Table 6, Approved Cover Types*.
41	Where the difference in elevation between the toe and top is greater than 10 feet, a slope interrupt is used at intervals not to exceed 10 feet vertical. The slope interrupt for steep slopes may be compost berm, compost sock, or gradient terrace. Silt fence is not used for steep slope interrupt.

Table 1

Erosion and Sediment Control Checklist

42	Sediment control is located near the toe of the slope. Sediment control meets the loading limits of *Table 4, Load Rates For Sediment Controls*. Where the toe of the slope is not level and linear sediment control devices are used frequent breaks are shown with the downhill end returned up-slope.
Inactive Area Stabilization	
43	A separate inactive area stabilization drawing is provided for each milestone in the land disturbance activities and for each change in the contractor areas.
44	Each inactive area stabilization drawing shows the sediment control and runoff control from previous phases to either continue in place, or be relocated, or be removed.
45	Each area to receive topsoil is indicated.
46	Each subarea within the project site is shown as having one of the following cover types: an active work area, an undisturbed area, an identified cover on a restored inactive area, an identified mud free surface in contractor areas, or an erosion control device such as a sediment trap, sediment basin or stable open channel conveyance. Each cover type is shown graphically as a unique pattern and not as outline only.
47	The cover identified for a restored inactive area is approved in *Table 6, Approved Cover Types*, for the ground slope in that area. If a bonded fiber matrix is used as a cover either the reviewing municipality has adopted a BFM specification or an adequate project specification is provided.
48	Long, mild and moderate slopes (longer than 75 feet and flatter than 15%) are interrupted at intervals not to exceed 75 feet. Slope interrupts for long, mild and moderate slopes are compost berm, gravel berm, compost sock, or silt fence. Slope interrupts shall approximately follow a contour
49	Silt fence or other linear sediment control is shown within the interior of the construction area where the downslope perimeter of seeded areas is adjacent to pavement or open channels.
50	Inlet protection is used within the interior of the construction area where it will not cause hazard to traffic or cause erosion along the downstream bypass route.
51	Inactive area stabilization drawings show access barrier between active work areas and inactive areas restored by seeding. Paving, sod and similar immediately effective covers do not need an access barrier.
Written Construction Sequence	
52	The written construction sequence requires perimeter controls and access controls shown on the pre-clearing plan to be installed prior to other construction activity.
53	Where early work opportunities are identified, the written construction sequence requires they be persecuted in advance of general clearing to the maximum extent allowed by critical path analysis and the special conditions of the project.
54	The written construction sequence requires runoff control devices to be, to the maximum extent practicable, installed prior to general clearing. Pre-clearing installation may not be practicable in the following conditions: 1. top slope diversion on steep embankment slopes created during the grading phase, 2. Where deep fills will alter the drainage pattern.
55	Where early installation of runoff control devices is not practicable, the written construction sequence requires check dams to be constructed across the drainageway at the end of any shift when the local weather forecast predicts greater than 10% chance of rain prior to the completion of the next planned shift.
56	The written construction sequence requires all diversion channels, grass lined channels, sediment traps and sediment basins to be stabilized within 5 days of installation.
57	The written construction sequence requires steep slope protection to be placed as soon as practicable during the grading operation.

Table 1

Erosion and Sediment Control Checklist

58	Where water bars are used, the written construction sequence requires water bars to be installed concurrent with the trench backfill operation.
59	The written construction sequence identifies the construction milestone applicable to each inactive area stabilization drawing that triggers the placement or adjustment of the ground cover, access barriers, and other erosion and sediment controls shown on the drawing.
60	The written construction sequence requires that infiltration and retention based post construction water quality BMPs will not be installed until the drainage area is stabilized with an allowable cover and all vegetative cover in the catchment area are established.
61	The written sequence requires that all downslope sediment control stay in place until after the drainage area is stabilized and all vegetative cover in the drainage area are established. Or in the case of sediment basins and traps that are converted to permanent stormwater management facilities that the conversion take place after the drainage area is stabilized and all vegetative cover in the drainage area is established. The written sequence requires stabilization of the areas disturbed by the removal or conversion of the downslope sediment controls.
62	The written sequence requires a plan modification if the plan fails to substantially control erosion and offsite sedimentation.
63	Sites over 10 acres shall have limits in the area of ground to be exposed at any one time or shall have a defined maximum time of exposure for each subarea of the site. Maximum exposure limits have been negotiated with the municipality issuing the permit. Maximum exposure limits are included in the written construction sequence.
Final Restoration	
64	Topsoil and planting soil placement is shown on the final restoration plan.
65	Limits of disturbance for installation of post construction water quality BMPs are shown on the final restoration plan.
66	Final restoration plans show the removal of contractor areas and temporary access controls and sediment controls to areas where seed has established or that are protected by immediately effective cover such as pavement or landscape beds. Construction sequence for the final restoration plan calls for the retention of access controls and sediment controls for areas where seed has not established 70% cover.
67	Cover for area affected by the end of construction removal of temporary BMPs is shown on the final restoration drawing.
Good Housekeeping and Other Measures	
68	A rock construction access is shown on all phases prior to placement of base pavement on all paved surfaces on the site.
69	A concrete washout facility is shown on all phases with concrete deliveries to site.
70	Soil stockpiles are located within 50' of a hillcrest or has an up-slope diversion dike. Stockpiles are located at least 50' away from a drainage way. Stockpiles have sediment control located within 25' of their down-slope toe. Cover for stockpile is approved for steep slopes, and notes require cover to be installed within 14 days of completion of stockpile.
71	A topsoil stockpile is located on the pre-clearing plan, or final restoration plan calls for adequate depths of imported planting soil in all planting areas.

Table 2

Checklist for Sediment Basin Detail

1	A separate custom detail is provided for each sediment basin.
2	The sediment basin is not located in a stream buffer as defined by the municipal authority.
3	Existing and construction phase contours are shown. Total volume to the top of riser is not less than 3600 cf/acre of drainage area. Total volume includes sediment storage and transient storage.
4	The extent of ponding at the elevation of the top of riser is shown. The minimum surface area, with water surface at the top of the riser, is 1000 sf/acre, or the flow length is twice the average width.
5	The embankment height does not exceed 15.0 feet, unless designed by a qualified geotechnical professional. The embankment slopes do not exceed 2.5:1. Top width is at least 8 feet. The cover on the embankment is approved for steep slopes. See *Table 5, Approved Cover Types*.
6	Riser information includes the riser and drain pipe location and diameters, elevation of lowest row of holes, number and size of holes per row, row spacing and top of riser elevation.
7	Dewatering provisions meet one of the following: A. With a permanent pool of 30 to 50% of the design volume, the area of dewatering holes is 0.15 to 0.20 sq-in/row/acre of drainage area. Rows of dewatering holes are separated by 6 inches, vertical. B. With a permanent pool less than 30% of the deign volume, the area of dewatering holes is 0.10 to 0.15 sq-in/row/acre of drainage area. Rows of dewatering holes are separated by 6 inch, vertical. (because the smaller permanent pool will have more dewatering rows the area per row will be smaller) A manufactured skimmer is used and a dewatering rate is identified that will drain the basin in 24 to 48 hours.
8	The extent of ponding at the elevation of 4% design storm routed through the overflow spillway is shown at roads, structures and utilities. Ponding does not encroach upon any roadway, structure or utility.
9	The route of the overflow channel and the dimensions of the control section of the overflow channel are shown. Control section and exit channel are located outside of the embankment, and are shown to be seeded and mulched or lined.
10	The overflow channel has a control section that is level in the direction of flow for a distance of 20 feet. The control section width meets the requirements of *Section 5159 Sediment Basin.*
11	Spot elevations shown include: the flowline of the control section, the water surface elevations of the 50% and 4% design storms, the minimum embankment crest elevation "as constructed" and after settlement, and the elevation of the downstream toe of embankment. The settlement allowance for the "as constructed" elevation is 5% of the fill depth.
12	Water surface elevations comply with the limits of *Section 5159, Figure 1: Relationships between sediment basin design elevations.*
13	Outlet protection is provided where the drain pipe and the overflow channel rejoin the watercourse.
14	Location and elevation of the sediment cleanout marker is shown. In Kansas the cleanout level can be no more than 20% of the total storage volume. In Missouri the cleanout level can be no more than 50% of the total storage volume. The permanent pool, if used, does not exceed the cleanout level.

Table 3

Checklist for Sediment Trap Detail

1	A separate, custom detail is provided for each sediment trap.
2	Existing and proposed contours are shown. The storage volume and extent of ponding at overflow elevation are shown. Ponding depth is less than 7 feet, and the storage volume is greater than 1800 cf/acre of drainage area.
3	The embankment slopes do not exceed 2.5:1, and the embankment height is less than 15 feet. Stabilization of embankment is appropriate for steep slopes.
4	The minimum embankment crest elevations "as constructed" and after settlement are shown. The settlement allowance for the "as constructed" elevation is 5% of the fill depth.
5	Cover for the downstream face of the embankment approved for steep slopes, see *Table 6, Approved Cover Types*.
6	The location of the rock outlet section of the embankment is shown. An overflow channel is not required for sediment traps with drainage area less than 5 acres.
7	Location and elevation of the sediment cleanout marker is shown. In Kansas the cleanout level can be no more than 20% of the total storage volume. In Missouri the cleanout level can be no more than 50% of the total storage volume.
8	The sediment trap is not located in a stream buffer as defined by the municipal authority.

Table 4

Load Rates for Sediment Controls

BMP	Load Limits for Perimeter Sediment Control	Interior Placement for Inactive Area Stabilization
Sediment Basin*	5 to 50 acre drainage area	N.A.
Sediment Trap*	0 to 5 acre drainage area	N.A.
Silt Fence	<0.25 acre drainage area/100' of treatment length.	At the down-slope edge of seeded inactive areas, and slope interrupt at 75 foot spacing on mild and moderate slopes.
Compost Sock, Compost Berm, Vegetative Buffer and other Linear sediment control devices	Sheet flow only: < 75' catchment length for slopes < 5% < 50' catchment length for slopes > 5%	At the down-slope edge of seeded inactive areas, and slope interrupt at 75 foot spacing on mild and moderate slopes, and slope interrupt at 10-foot vertical spacing on steep slopes.
Inlet Protection, Sump Type with Excavated Pit*	0 to 3 acres drainage area, only where Sediment Trap is infeasible	N.A.
Inlet Protection, Sump Type without Pit	N.A.	Only where ponding will not create traffic hazard
On-Grade Type	N.A.	Only when both continuous stable conveyance and additional treatment are provided downstream.
* A stabilized diversion dike or other runoff conveyance is usually necessary to complete the treatment system.		

Table 5

Stable Conveyance Types

Conveyance	Limit
Undisturbed stream corridor, with access control	None
Diversion dike, bare ground	Drainage area < 5 Acres, Exposure < 21 Days, Slope < 5%
Diversion dike, seeded & erosion control blanket	Drainage area < 5 Acres
Open channel with check dams	Drainage area < 10 Acres
Open channel with sod lining	Slope less than 5% or the velocity less than 5 fps for the 50% design storm
Open channel with rock or TRM lining	None
Temporary and permanent piped system	None
Water bars	Limited to linear work sites with stable vegetation adjacent to down-slope edge. Spacing less than 50 feet
Slope drain	Drainage area < 2 acres
Outlet protection	
Riprap pad	None
Rock rimmed plunge pool	None
Permanent energy dissipating structure	None
Lateral discharge to a stream	Discharge elevation is at the base flow elevation
Discharge to a sediment basin or sediment trap	Discharge elevation 0 - 1' above maximum sediment accumulation elevation
Discharge point	
Natural stream, vegetated swale or public storm sewer.	Clean water bypass only, outlet protection provided
Sediment basin or sediment trap	Bypass offsite clean water to the extent practicable.

Table 6

Approved Cover Types

Cover	Mud Free Surface	Allowed for
Seed with erosion control blanket		All slopes
Erosion control blanket without seed		All slopes, winter only
Seed with compost mulch		All slopes
Compost mulch without seed		All slopes, winter only

Table 6
Approved Cover Types

Cover	Mud Free Surface	Allowed for
Sod		All slopes
Final landscape planting and mulch		All slopes
Temporary shoring or permanent retaining wall		All slopes
Seed with bonded fiber matrix		All slopes, with municipal approval
Seed with straw mulch		Mild or moderate slope only
Seed with spray applied mulch		Mild or moderate slope only
Compost mulch without seed		Mild or moderate slope only
Erosion control blanket without seed		Mild or moderate slope only
Crushed stone, gravel or millings	√	Mild slope only
Pavement or pavement base course	√	Mild slope only
Building floor slab	√	Mild slope only
Steep slopes are steeper than 15% and have a change in elevation between top and toe of more than 3 feet. Moderate slopes are flatter than 15% or with less than 3 feet elevation change between toe and top. Mild slopes are flatter than 5%		

SECTION 5106 SAMPLE APPLICATIONS BY PROJECT TYPE

5106.1 General

This section explores opportunities to apply erosion control principles in ways that are specific to the type of construction. These are typical starting points; however, site conditions may override any of these recommendations.

5106.2 Large Land Development

These are projects that disturb a large area. Typical projects are: infrastructure for single family subdivisions, regional commercial center, or large "garden level" apartment complexes. Characteristics include: large land areas, significant new drainage improvements, considerable latitude in drainage system design, significant land area devoted to detention or post-construction BMPs, grading operations of several weeks duration, and a considerable inactive area once grading is complete. These projects often include on site detention, stream crossings or other stream interventions.

A. Opportunities:

1. The standard pre-clearing, inactive area stabilization, and final stabilization plan presentation is well suited for this type of construction.
2. Storm sewer, permanent erosion control, and detention may be used for construction phase runoff control and sediment treatment with minor adjustments.
3. Construction items that may precede general clearing are sanitary and storm sewer, demolition if any, and stream interventions such as crossings, stabilization or relocation.
4. Very large sites should have some sort of phased or sequential grading plan.

5. Steep slopes can be protected while mass grading is ongoing. Individual elements of steep slope protection, such as sediment control at toe or diversion at top, may often be placed prior to any grading occurring.
6. Once mass grading is complete the inactive area of a subdivision will include all lot area except the front utility easement. This represents the majority of a single family residential subdivision and all of the steep slopes. Tie inactive area stabilization to initiation of pavement preparation or installation of shallow utilities.
7. For a commercial complex, consider a separate grading limits and a separate erosion control plan for outlying parking (any area not needed as contractor areas). This can fit into the construction schedule in a number of places.
8. Consider topsoiling. For commercial or multifamily sites where building construction runs concurrent with site development topsoil may be placed during the construction period. For residential subdivisions a common stockpile may be placed for re-use by individual builders.

B. Typical Written Sequence: This is written for a typical single family subdivision; edit as necessary.

1. Implement Pre-Clearing Plan: All structural BMPs‡ shown on the pre-clearing plan must be in place before general clearing operations. Clearing necessary to place structural BMPs shall be the minimum required for installation. Coordinate clearing necessary to place structural BMPs with local weather forecast so that clearing and placement may be completed within a forecast dry period. Stabilize all diversions dikes, sediment basins, and sediment traps within 5 days after installation.
2. Early Work: Clear minimum work zone and construct any early work items of permanent construction that are shown on the pre-clearing plan.
3. Grading: Clear site and complete mass grading.
4. Implement Steep Slope Protection. During grading operations, place steep slope protection shown on the inactive area stabilization drawing as soon as practicable.
5. Stabilize Inactive Areas: The ground cover and other structural BMPs shown on the inactive area stabilization drawing must be placed within 14 days of cessation of mass grading at each location. In determining the inactive status of the ground, evaluate each portion of the site separately. The need for subsequent placement of trenched utilities, future building or other construction in an otherwise inactive area is not justification for delay of stabilization.
6. Install Site Improvements: Construct the remainder of the utilities, roads, buildings and other site improvements depicted on the construction plans.
7. Implement Final Stabilization: Coordinate removal of construction phase BMPs necessary to place final stabilization with local weather forecast so that removal and placement may be completed within a forecast dry period. Down-slope perimeter controls shall not be removed until final stabilization is placed and vegetative cover is established over the remainder of the site.
8. Establishment and Final Construction: Once the remainder of the site is stabilized including establishment of seeded cover types, construct permanent water quality BMPs and remove the sediment controls and the remaining access controls. Restore area disturbed by removal of sediment controls.
9. Plan Modification: The contractor must modify the plan if the plan fails to substantially control erosion and offsite sedimentation. Plan modifications due to ineffectiveness may be taken without prior approval of the review agency, but must be fully documented and approval secured from the permitting authority as soon as practicable. The contractor may modify the plan or construction sequence if implementation is infeasible for site conditions or contractor methods. Any such modification shall

control erosion and offsite sedimentation to the maximum extent practicable. Any such modification shall require the prior approval of the permitting authority.

10. ‡ Structural BMP refers to any BMP that requires installation of physical placement on the site as opposed to management BMPs such as management of the construction sequence, inspection, maintenance and good housekeeping activities.

5106.3 Small and Medium Site Construction

These are construction of building, parking and landscape on a single lot where utilities and street access are already in place to the lot edge. Typical work includes single family house and infill commercial lots up to a few acres. Characteristics include: small overall size, demolition and grading phase of very short duration, a high potential for mud tracking, few if any new drainage improvements, little latitude in drainage design, and detention when required is likely to be underground. These projects have extensive contractor areas relative to their size, particularly during framing, roofing, and siding of the primary structure.

A. Opportunities:

1. There is seldom opportunity for early construction that would significantly delay general clearing.
2. Where the work includes an on-site storm inlet, consider incorporating inlet protection with excavated pit.
3. Diversion of upstream water is often the only practical runoff control.
4. Consider enhanced construction entrance with grating and wheel wash facilities.
5. Inactive area: Small sites are intensively used for storage, assembly and erection of the building structural elements. Typically there are few inactive areas until the framing, siding and roofing are done. This should be the milestone for inactive area restoration.
6. On commercial sites the proposed paving represents nearly all of contractor areas as well as a large portion inactive area. Consider modifying the permanent pavement section to include a soil separator fabric and aggregate base that may be used for construction phase erosion control and mud control.
7. Consider early placement of landscape or other permanent cover for protection of inactive areas during the interior finish stage.
8. Topsoiling: Consider topsoiling for single family residential. The intense use of a small commercial site for building, parking, and landscaped areas with amended soil may leave little opportunity for topsoiling.

B. Typical Written Sequence: edit as necessary for specific site conditions:

1. Implement Pre-Clearing Plan: All structural BMPs‡ shown on the pre-clearing plan must be in place before general clearing operations. Clearing necessary to place structural BMPs is the minimum required for the installation. Coordinate clearing necessary to place structural BMPs with local weather forecast so that clearing and placement may be completed within a forecast dry period. Stabilize all diversions dikes, sediment basins, and sediment traps within 5 days after installation.
2. Clear and Stabilize Work Areas: Grade building pad and contractor areas and place all-weather surface on contractor areas.
3. Implement Steep Slope Protection. During grading operations, place steep slope protection shown on the inactive area stabilization drawing as soon as practicable.
4. Building Top-out: Complete building foundation, framing, siding and roof installation including utility services.

5. Stabilize Inactive Areas: The ground cover and other structural BMPs shown on the inactive area stabilization must be placed within 14 days of cessation of ground disturbing activity at the location of the BMP, but in no case later than 14 days from building top out. In determining the inactive status of the ground, evaluate each portion of the site separately. The need for subsequent placement of trenched utilities, pavement or other construction in an otherwise inactive area is not justification for delay of stabilization.
6. Finish Interior: Construct the interior of the structure and minor structures depicted on the construction plans.
7. Implement Final Stabilization: Place permanent site cover. Coordinate removal of construction phase BMPs necessary to place final stabilization with local weather forecast so that removal and placement may be completed within a forecast dry period. Down-slope perimeter controls shall not be removed until final stabilization is placed and vegetative cover is established over the remainder of the site.
8. Establishment and Final Construction: Once the remainder of the site is stabilized including establishment of seeded cover types, construct permanent water quality BMPs and remove the sediment controls and the remaining access controls. Restore area disturbed by removal of sediment controls.
9. Plan Modification: The contractor must modify the plan if the plan fails to substantially control erosion and offsite sedimentation. Plan modifications due to ineffectiveness may be taken without prior approval of the review agency, but must be fully documented and approval secured from the permitting authority as soon as practicable. The contractor may modify the plan or construction sequence if implementation is infeasible for site conditions or contractor methods. Any such modification shall control erosion and offsite sedimentation to the maximum extent practicable. Any such modification shall require the prior approval of the permitting authority.
10. ‡ Structural BMP refers to any BMP that requires installation of physical placement on the site as opposed to management BMPs such as management of the construction sequence, inspection, maintenance and good housekeeping activities.

5106.4 Roadway

These are public capital works projects for arterial and collector roadway construction and reconstruction with vertical grade changes. Road projects are characterized by long narrow work zones typically crossing several drainageways. They have relatively large land areas and significant off-site flow contribution. Project requirements usually include land acquisition needs, complex phasing driven by maintenance of traffic and relocation of utilities. Grading operations that are of several weeks duration but a relatively minor fraction of the entire construction schedule. The pavement and shoulder areas are subject to multiple construction operations with necessary lag time in between, therefore inactive areas are often limited to cut and fill slopes. These projects often include stream crossings or stream relocation. Pavement reconstruction without change in the vertical grade is a special subset of this article.

A. Opportunities:

1. Drainage areas are large enough that sediment traps will usually be needed. Typical location of the traps is at the two downstream or all four quadrants of a stream crossing. Identify requirements early in design and secure necessary easements as part of project land acquisition. The contractor will typically be unable to procure the necessary easements in a timely manner; they must be part of the pre-bid acquisition.
2. Consider the extent to which permanent conveyances may be used for construction phase runoff control. Consider permanent top of cut slope diversion channel and slope drains. Consider permanent gradient terraces.

3. Inactive areas are practically limited to cut and fill slopes. These may typically be restored quite early in the construction. Apply all steep slope protections as early as possible.
4. Consider adding project phases for stream crossings to be completed in advance of general clearing.
5. Project phasing will be driven by utility relocation needs and the need to maintain public access. Inactive area stabilization drawings should match the project phasing. Assess and show what erosion control stage (undisturbed, active work zone, inactive, finished) each location can reach at the milestones represented by the project phasing. Provide a separate erosion control plan to be implemented at the start of each construction phase.
6. Pavement reconstruction without change in vertical grade: No erosion control is needed for mill and overlay so long as milling depth is less than asphalt depth. Consider limiting exposure of the subgrade to a maximum time or maximum length of roadway exposed at any one time. Other than that avoidance technique, gravel bag check dams at flowline may be of some benefit. See the discussion in *Section 5158 Sediment Control* about the efficacy of inlet protection.

B. Typical Written Sequence: edit as necessary for specific site conditions:

1. Implement Pre-Clearing Plan: All structural BMPs‡ shown on the pre-clearing plan must be in place before general clearing operations. Clearing necessary to place structural BMPs shall be the minimum required for installation. Coordinate clearing necessary to place structural BMPs with local weather forecast so that clearing and placement may be completed within a forecast dry period. Stabilize all diversions dikes, sediment basins, and sediment traps within 5 days after installation.
2. Early Work: Clear minimum work zone and construct any early work items of permanent construction that are shown on the pre-clearing plan.
3. Construct permanent roadway improvements following designated phases.
4. Implement Steep Slope Protection. During grading operations, place steep slope protection shown on the inactive area stabilization drawing as soon as practicable.
5. Implement Erosion and Sediment Control Modifications at Project Phases: Prior to conducting other construction activities on each phase, install all BMPs shown and remove all BMPs shown to be removed on the applicable erosion control plan.
6. Implement Final Stabilization: Coordinate removal of construction phase BMPs necessary to place final stabilization with local weather forecast so that removal and placement may be completed within a forecast dry period. Down-slope perimeter controls shall not be removed until final stabilization is placed and vegetative cover is established over the remainder of the site.
7. Establishment and Final Construction: Once the remainder of the site is stabilized including establishment of seeded cover types, construct permanent water quality BMPs and remove the sediment controls and the remaining access controls. Restore area disturbed by removal of sediment controls.
8. Plan Modification: The contractor must modify the plan if the plan fails to substantially control erosion and offsite sedimentation. Plan modifications due to ineffectiveness may be taken without prior approval of the review agency, but must be fully documented and approval secured from the permitting authority as soon as practicable. The contractor may modify the plan or construction sequence if implementation is infeasible for site conditions or contractor methods. Any such modification shall control erosion and offsite sedimentation to the maximum extent practicable. Any such modification shall require the prior approval of the permitting authority.
9. ‡ Structural BMP refers to any BMP that requires installation of physical placement on the site as opposed to management BMPs such as management of the construction sequence, inspection, maintenance and good housekeeping activities.

5106.5 Utility Main Extension

These are new lines and major maintenance of existing lines of utilities installed by open cut trench. Typical projects include water, gas, and electrical mains. Characteristics include: a long narrow project area, an active work zone that is concentrated in a small area at any given time and correspondingly long inactive periods for any particular location, a large number of concentrated flow crossings, very minor drainage improvements, and areas adjacent to the project area are undisturbed.

A. Opportunities:

1. Minimize duration of exposure by limiting clearing in advance of excavation and require restoration at short intervals. EPA has established a 14 day maximum for restoration after an area becomes inactive.
2. Require crossings of waterways to be completed in forecast periods of no rain. Treat every low point in the existing ground profile as a crossing.
   a. For minor crossings, less than 10 acres, use a erosion control blanket
   b. Larger crossings should have stream intervention designed according to APWA 5600.
3. Consider using a vegetated buffer (with access barriers if too narrow) or other linear sediment control device. See catchment length requirements in *Table 4 Load Rates for Sediment Controls*. Consider using an up-slope diversion dike to shorten slope length. Break diversion dike frequently and cross trench with a water-bar and erosion control blanket.
4. Cross country routes will need rock construction entries at defined access points. However, routes are often near streets with multiple low/volume access points along the way. Access may be at existing driveways. If there is no haul in/haul out, a rocked construction entry may not be necessary.
5. Water-bars should be applied where the fall line of the slope is closer than 45° to the trench centerline.
6. Direct bury, trenchless and overhead utilities need consider only the access and concentrated flow recommendations.
   a. Direct bury or trenchless plans should show concentrated flow areas on the plans to show that bore pits and similar areas of disturbance avoid the flow areas.

B. Typical Written Sequence: this sample is written for trenched utilities; edit as necessary:

1. Up-slope diversion and down-slope treatment devices – including access barriers for vegetative buffers – shall be installed prior to clearing of the reach protected.
2. Stabilize all diversions dikes, sediment basins, and sediment traps within 5 days after installation.
3. Clearing of any reach shall be no more than 3 days in advance of the excavation work within that reach.
4. Topsoil shall be segregated and reapplied to trench prior to placement of final cover.
5. Stream crossings shall be coordinated with a 5 calendar day forecast of no rain. The crossing shall be completed, from clearing to permanent cover in the flow area within 5 calendar days.
6. Crossings of minor swales shall be completed and restored with erosion control blanket all in the same day.
7. Water-bars shall be installed the same day the trench is backfilled.
8. Completed trench and other inactive areas shall be stabilized on an interval not to exceed 14 days.
9. To avoid damage to restoration plantings, weekly inspection of inactive areas shall be made by foot. Areas within ¼ mile of paved access points may be taken as representative of establishment of more inaccessible areas.

10. Establishment and Final Construction: Once the remainder of the site is stabilized including establishment of seeded cover types, remove temporary BMPs.

11. Plan Modification: The contractor must modify the plan if the plan fails to substantially control erosion and offsite sedimentation. Plan modifications due to ineffectiveness may be taken without prior approval of the review agency, but must be fully documented and approval secured from the permitting authority as soon as practicable. The contractor may modify the plan or construction sequence if implementation is infeasible for site conditions or contractor methods. Any such modification shall control erosion and offsite sedimentation to the maximum extent practicable. Any such modification shall require the prior approval of the permitting authority.

5106.6 Commercial Borrow or Fill Site

These are borrow or fill sites established to serve the needs of more than one project. Characteristics include: major changes in grade, intermittent periods of use over a time span of months or years, multiple operators using the site, reliance on surface drainage with minor piped drainage improvements. Fill sites often will segregate types of materials, particularly clean earth from rubble, rubble areas have highly variable runoff coefficient.

A. Borrow site opportunities: Because of the long times involved, use spatial phasing to limit the area of disturbance at any one time. Use discrete cells to limit disturbance area. A separate drawing for each cell is needed. Necessary elements for the drawing depicting the opening of a new cell would include:

B. Depiction of restoration of previous cell: cover type, restoration of previous sediment pool, all steep slope elements for protection of the face of excavation (unless previous face is active face of new cell), inactive face likely to be steep so set both top diversion and toe of slope linear sediment control device well away from face, and stable runoff conveyance from slope drains to permanent improvement.

C. Access controls including:

   a. A fence and gate controlling access to the site

   b. A rocked construction entry.

   c. Haul road and loading maneuvering area at the initial face of excavation in the newly opened cell.

   d. A barrier along the haul road and maneuvering area to prevent traffic from entering restored areas.

   e. A barrier at the top limits of the new cell.

   2. Runoff control includes:

      a. A diversion dike at the top limits of the new cell, along with appropriate slope drains and stable receiving conveyances. Up-slope diversion will be minimized if cell boundaries are coordinated with existing ridge lines.

      b. Diversion dike to direct flow from maneuver area toward the treatment pool.

   3. Treatment facility: Either a sediment trap of a sediment basin depending on area. Maximum area, including treatment area, maneuvering area and area to be excavated, is 10 acres with a sediment basin. But limiting the cell area to 5 acres will allow use of the simpler and smaller sediment trap for treatment.

D. Construction rubble fill site opportunities: Construction rubble has a large particle size. The surface roughness and pore space of rubble piles are large. The rubble piles themselves are unlikely to erode or generate much runoff. More immediate goals are to protect clean earth stockpiles, prevent mud tracking, and accomplish quick restoration whenever rubble piles are leveled and capped.

   1. The fill area should avoid or relocate permanent utilities.

2. The site should be fenced, gated and signed with contact information. A rocked construction entry is usually necessary.
3. The site perimeter and any stream corridor should be identified by a construction fence.
4. Provide down-slope sediment control at the site perimeter and any stream corridor.
5. Clean earth stockpiles for capping should be separated from rubble piles. See *Section 5157 Access Limits and Contractor Areas* for stockpile requirements.
6. Level, cap, seed and mulch fill areas whenever the area of the rubble mounds plus the maneuvering area reaches two acres. See *Section 5161 Inactive Area Restoration* for cover types and slope interruption requirements. To extent practical level, cap and seed during spring or fall germination periods.
7. Typically the working face of the fill area is not capped until the closing of the site. Place steep slope protection on fill face when site is closed.
8. Due to a long duration of exposure a separate dust control plan should be prepared for sites without natural windbreaks and for sites near habitable buildings or arterial roads.

SECTION 5107 ACCESS LIMITS AND CONTRACTOR AREAS

5107.1 General

This section covers BMPs that are related to contractor's management of access on and over the project site.

5107.2 Contractor Areas

Contractor areas are those centralized facilities and spaces used by the contractor that are not part of the permanent improvements. These include: field office, construction entry, concrete washout tank, employee and equipment parking, equipment maintenance area, storage yard, assembly and erection areas. Only areas intended to remain in place for a significant portion of the project are included in this definition. Short term sites may be excluded; these include: excavation sites, haul roads of short duration, and materials that are delivered to the point of installation rather than a centralized yard. The following erosion control shall apply:

A. Access to the site shall be a stable rocked construction entry. Exceptions are low volume entries commensurate with exploratory work or spot repairs with no haul in or haul out.

B. The contractor areas are to have a surface that will not track mud. Mud free surfaces include pavement, asphalt or granular base course, and millings.

C. The requirement for and timing of removal of temporary contractor facilities must be clearly identified in the erosion control drawings and construction sequence.

5107.3 Isolation of Areas to Remain Undisturbed

All areas to remain undisturbed throughout construction are to be identified and protected by a physical access barrier. Allowable barriers are as follows:

A. Undisturbed area is required by regulation: Examples are stream buffer, wetland, or native area used as post construction stormwater treatment BMP. When required by regulation, access barrier will be a construction fence.

B. Voluntary limits of disturbance: This includes any area to be preserved where such preservation is the choice of the owner and is not required by regulation. Where non-disturbance is voluntary the access barrier may be either a construction fence, a rope line or a permanent barrier such as a curb, retaining wall or lined channel.

5107.4 Isolation of Inactive Area

Use a permanent barrier, rope line or construction fence to isolate the inactive areas. See *Section 5161 Inactive Area Restoration* for definition of inactive area.

5107.5 Stockpiles

Locate stockpiles away from concentrated flow. Protect from sheet flow by locating within 50 feet of a crest, or else provide an up-slope diversion dike. Provide sediment control within 25 feet of the downstream toe of the stockpile; provide cover approved for steep slopes. Avoid locations that would cause haul routes to cross streets or pavements.

SECTION 5108 SEDIMENT CONTROL

5108.1 General

This section provides allowable hydraulic loading rates, descriptions, and sizing and application requirements for sediment control BMPs

5108.2 Hydraulic Loading Limits

Sediment control BMPs shall be used consistent with the loading rates in Section 5155 Design Checklist: Table 4 – Load Rates for Sediment Controls.

5108.3 Sediment Basin

A sediment basin is a large pool created by some combination of excavation and embankment. It includes outlet works that will drain or partially drain the basin in one to two days. It includes spillways to pass larger flows. Sediment treatment relies on settlement of soil particles. Typically used in conjunction with diversion dikes or other runoff conveyance as a downstream perimeter control. See *Section 5159 Sediment Basin* for additional design requirements.

5108.4 Sediment Trap

A sediment trap is a large pool created by some combination of excavation and embankment. Dewatering works are a section of rock embankment lined with gravel on its upstream face. A sediment trap does not include an overflow channel and serves a smaller drainage area than a sediment basin. Sediment removal relies on settlement of soil particles. Typically used in conjunction with diversion dikes or other runoff conveyance as a downstream perimeter control. The required volume is 1,800 cubic feet/acre of drainage area. The maximum effective depth is 7 feet.

5108.5 Silt Fence

Silt fence consists of a permeable fabric mounted on posts. Removal relies on settlement in a shallow pool behind the fence. Positioning details vary with use as follows:

A. As perimeter control: Only the portion placed within 1.0 feet of the lowest point of an uninterrupted reach of fence may be included in the hydraulic loading calculation. Ends of the fence must be returned uphill to a height of 1.5 feet above the lowest point. The fence along the slope will slow the water sufficiently to redirect it to the ponded area but will not function as a sediment control. For the purpose of calculating the hydraulic loading a sloping section of silt fence shall be considered to be a diversion conveying water to the treatment section.

B. As toe protection for steep banks: The fence should be as level as practical without running too far from the toe of slope. The fence must be set a short distance from the toe of the slope to allow for a ponding area. Break fence as necessary and return the ends uphill as described above to provide level treatment zones.

C. As interruption on long slopes: Fence must be set level with the contour. The ends must be returned uphill as described above.

D. As an internal sediment control for inactive area stabilization: The fence must run along the back of curb or back of sidewalk and will not therefore be level. Consider alternate linear sediment control devices such as compost berm or compost sock for improved performance.

5108.6 Other Linear Sediment Control Devices

Any of several filter mediums that have been recognized by the US EPA to significantly remove sediment by trapping sediment as water passes through the medium. Non-biodegradable filers must have sufficient strength to resist displacement during use and resist tearing or disintegration during removal.

A. Types: Other linear sediment control includes compost berms, compost sock, vegetative buffers, gravel berms, fiber rolls, brush rolls, foam dikes, and similar low, semi-permeable barriers.

B. Placement: Linear sediment control devices do not need to be as precisely level as silt fence. However, they should generally follow a contour to maximize the interception of flow. Typical uses include both perimeter control and interruption/redistribution of flow on both steep slopes and long slopes.

C. Advantages of Compost Berms and Compost Socks: Compost berms and compost socks have additional environmental advantages over silt fence and other types of linear sediment control devices. Compost berms and socks conform to the soil and therefore require little or no ground preparation to prevent underflow. Seed may be mixed directly with the compost prior to placement, saving a construction step and improving sediment control. Compost BMPs are made from a renewable resource that currently contributes to the solid waste disposal stream. They are biodegradable so disposal is simpler and when appropriate with the final use they may be left to decompose in place.

D. Vegetative Buffers: Minimum effective width of vegetative buffer is 10 feet. Buffers must have access barrier to ensure minimum width is preserved. When buffers used on linear projects are at least as wide as the work zone they do not require an access barrier. Areas to remain undisturbed may be used as vegetative buffers.

5108.7 Inlet Protection

There are two general types of inlet protection, sump and on-grade.

A. Sump type with or without excavated pit: This type consists of a barrier set a short distance away from the inlet opening. The barrier consists of a structural support and a filter such as a gravel layer or filter fabric. Removal is through settlement of soil particles. High flows overtop the barrier and dewatering is through the filter layer. An excavated pit adjacent to the inlet increases the storage volume and removal efficiency.

   1. Applicability: Overflow type, sump inlet protection may be used for both side opening and grated inlets. Where used as perimeter sediment control the minimum pit capacity is 950 cubic feet per acre of drainage area.

   2. Limitation: Because water and sediment accumulate in a wide area around the inlet, overflow types are not appropriate on roads that are open to the public. They are not applicable for on-grade inlets.

B. On-grade type: This type is a semi-permeable throat insert is placed in the inlet opening. Often, a block is used to create a gap between the insert and the throat to allow overtopping at higher flow.

   1. Applicability: On-grade types are not adequate by themselves to satisfy the downslope perimeter treatment requirement. Because of reduced inlet capacity on-grade inlets should be used only where the bypass route is erosion resistant and an effective sediment control BMP is provided along the bypass route. Can be used adjacent to traffic.

   2. Limitation: Do not use without providing downstream treatment and an erosion resistant, conveyance along the bypass route.

C. The Missouri General Permit states, “Where sediment is present on roadways all storm water curb inlets shall have inlet protection.”

SECTION 5109 SEDIMENT BASIN

5109.1 General

This section provides supplemental design criteria for sediment basins. These criteria are for a temporary facility meant to be removed within 3 years, and having a drainage area of less than 50 acres. For larger or permanent structures, a qualified geotechnical engineer experienced in dam design should complete the embankment and spillway designs. Where sediment basins are required they shall be installed as soon as practicable, generally before any other clearing occurs on the site.

5109.2 Placement Restrictions

Do not locate a sediment basin in an area of continuously running water. Do not locate a sediment basin where failure of the embankment will result in loss of life or damage to structures, roads or utilities. Do not locate a sediment basin where ponding will prevent the use of public roads or utilities. Do not locate a sediment basin within a designated regulated stream buffer or a designated stream preservation area; consult the municipal authority for the site for stream designations. To the extent practical, divert runoff from non-disturbed areas around the sediment basin.

5109.3 Embankment

Maximum embankment height from downstream toe to crest is 15 feet. Minimum top width is 8 feet; maximum slope of embankment face is 2.5:1. The "as constructed" elevation of the embankment crest shall include 5% of the embankment height as an allowance for settling. Design shall show both "as constructed" and "as settled" elevations of the crest. Embankment shall have cover approved for steep slopes.

5109.4 Volume

Total required volume is 3600 cubic feet per acre of drainage area. Drainage area includes any offsite areas tributary to the basin, unless the offsite area is diverted around the entire disturbed area and sediment basin. Storage volume is calculated to the rim elevation of overflow riser.

A. A portion of the total volume is allotted for sediment storage. (The Kansas General Permit restricts the sediment storage volume to 20% of the total. The Missouri General Permit allows sediment storage volume to be 50% of the total).

B. Each sediment basin must have a marker indicating the elevation of the maximum allowed volume of silt accumulation. The marker must be clearly visible from an easily accessible point on the sediment basin perimeter.

C. A permanent pool increases removal efficiency and is generally recommended. However, at some sites the nuisance associated with a permanent pool may outweigh the water quality benefits. Consult the municipal authority prior to final design. If used, the volume of the permanent pool should be limited to the allowable sediment storage volume.

5109.5 Surface Area/ Shape Factor

For effective removal the surface area of the pool at the elevation of the primary spillway shall meet at least one of the following requirements:

A. Minimum surface area shall be 1000 square feet per acre of drainage area, or

B. Flow length from the major inlet to primary spillway shall be twice the average top width of the pond, or

$$L \geq (2*A)^{0.5}$$

Where A is the surface area at the top of the riser and L is the distance from entry of the largest flow volume to the riser. Flow length may be increased by use of wire backed silt fence or other baffle. If baffles are required they shall be arranged so as to not interfere with silt removal.

5109.6 Dewatering

A dewatering device shall be included in the design to provide for a draw down time between 24 and 48 hours. Dewatering device may be either a skimmer or dewatering holes in a vertical riser. A skimmer provides superior sediment removal since the dewatering occurs from the relatively cleaner surface layer of the sediment basin and the dewatering is at a constant rate whereas dewatering holes release at a faster initial rate when less settlement has occurred.

A. Manufactured skimmer: Dewatering by skimmer occurs at a constant rate. To assist contractor's selection of skimmer the basin detail must establish dewatering rate in cf/hour that meets the drawdown time criteria.

B. Dewatering holes in a vertical riser: Design must show the size of holes, number of holes per row, and row spacing required to meet the drawdown time criteria. Drawdown holes must be protected by a gravel filter; filter fabric will clog and is not allowed. Absent a detailed analysis, dewatering holes, spaced at 6 inches vertically, may be estimated as follows:

   1. Small permanent pool (0 to 30% of required volume): To draw down 2500 to 3600 CF/acre of storage over the allotted time use a total dewatering area per row 0.10 to 0.15 square-inches/acre of drainage area.

   2. Large permanent pool (30 to 50% of required volume): To draw down 1800 to 2499 CF/acre of storage over the allotted time use a total dewatering area per row 0.15 to 0.25 square-inches/acre of drainage area. Note: For similarly shaped basins a larger permanent pool will result in many fewer rows of dewatering holes and a smaller initial pressure head for the bottom row. These effects more than offset the effect of a smaller total volume to be discharged. Although the result is counterintuitive, the dewatering area per row is greater for large permanent pools.

5156.1 Freeboard and Spillways

The primary overflow conveyance shall be an open top riser. The riser shall convey a 50% design storm prior to discharge from an auxiliary open channel overflow. An open channel overflow shall protect the embankment from overtopping during a 4% design storm. The settled crest of the embankment shall have a minimum of 0.5 foot of freeboard above the 4% design storm. The following shortcuts for riser and overflow channel represent the upper envelope from routing the design storms through a wide range of sample basins. Shortcuts were developed using a runoff coefficient for construction sites of 0.7, the Huff third quartile distribution for rainfall at a point, and rainfall intensities from *Precipitation Frequency Estimates for the Kansas City Metropolitan Area; McEnroe and Young, June 2002*. The shortcut methods are applicable for drainage areas between 5 and 50 acres and water surface areas at top of riser between 550 and 2000 SF/acre.

C. Open top riser: The riser shall include anti-vortex crown and a trash rack. As a shortcut to storm routing the vertical separation, in feet, between the top of riser and the flowline of the open channel control section may be calculated as:

$$H_1 \geq 2900*A/(WS + 3000*D^2), \text{ but not less than 1.0 feet.}$$

Where: A = Drainage area of sediment basin, in acres.

WS = Water surface area of the sediment basin at the top of riser elevation, in square feet.

D = Diameter of riser, in feet. Diameter shall not be less than 2.0 feet.

D. Open channel overflow: Open channel overflow shall consist of an entry channel, a control section and an exit channel.

1. Entry channel shall have an adverse slope and be at least as wide as the control section.
2. Control section shall be level along the direction of flow, trapezoidal in shape, and shall have a minimum length in the direction of flow of 20 feet. Control section shall be located outside the embankment and shall be seeded. As a shortcut to storm routing the control section may be sized as below:

$$Q_{actual} = 3.8*A - 0.001*WS*\Delta_1, \text{ but not less than } 1.0*A$$

$$Q_{allowable} = 3.0*B*(\Delta_2-0.5)^{3/2}$$

$$Q_{allowable} \geq Q_{actual}$$

Where:

Q_{actual} = Shortcut estimate of storm runoff from a 4% event after routing through sediment basin, in cfs.

A = Drainage area of sediment basin, in acres.

WS = Water surface area of the sediment basin at the top of riser elevation, in square feet.

Δ_1 = Elevation difference between the flowline of control section and the top of riser, in feet.

$Q_{allowable}$ = Maximum release rate through the control section calculated at conditions of minimum required freeboard, in cfs.

B = Bottom width of the control section, in feet. Width should be as small as practical to keep the excavated control section level without special construction techniques, but not less than 10 feet.

Δ_2 = Elevation difference between the settled elevation of the top of the embankment and the flowline of the control section, in feet.

3. Exit channel: Exit channel may be trapezoidal or triangular. The bank full capacity shall exceed Q_{actual} as calculated above. Centerline radius of the exit channel shall be 4 times the top width. Exit channel shall be located outside of the embankment and shall be seeded or lined. Manning's formula may be used for exit channel design calculation.

E. Outlet protection: An outlet protection is required where the riser discharge and where the open channel overflow discharge rejoin the natural flow path.

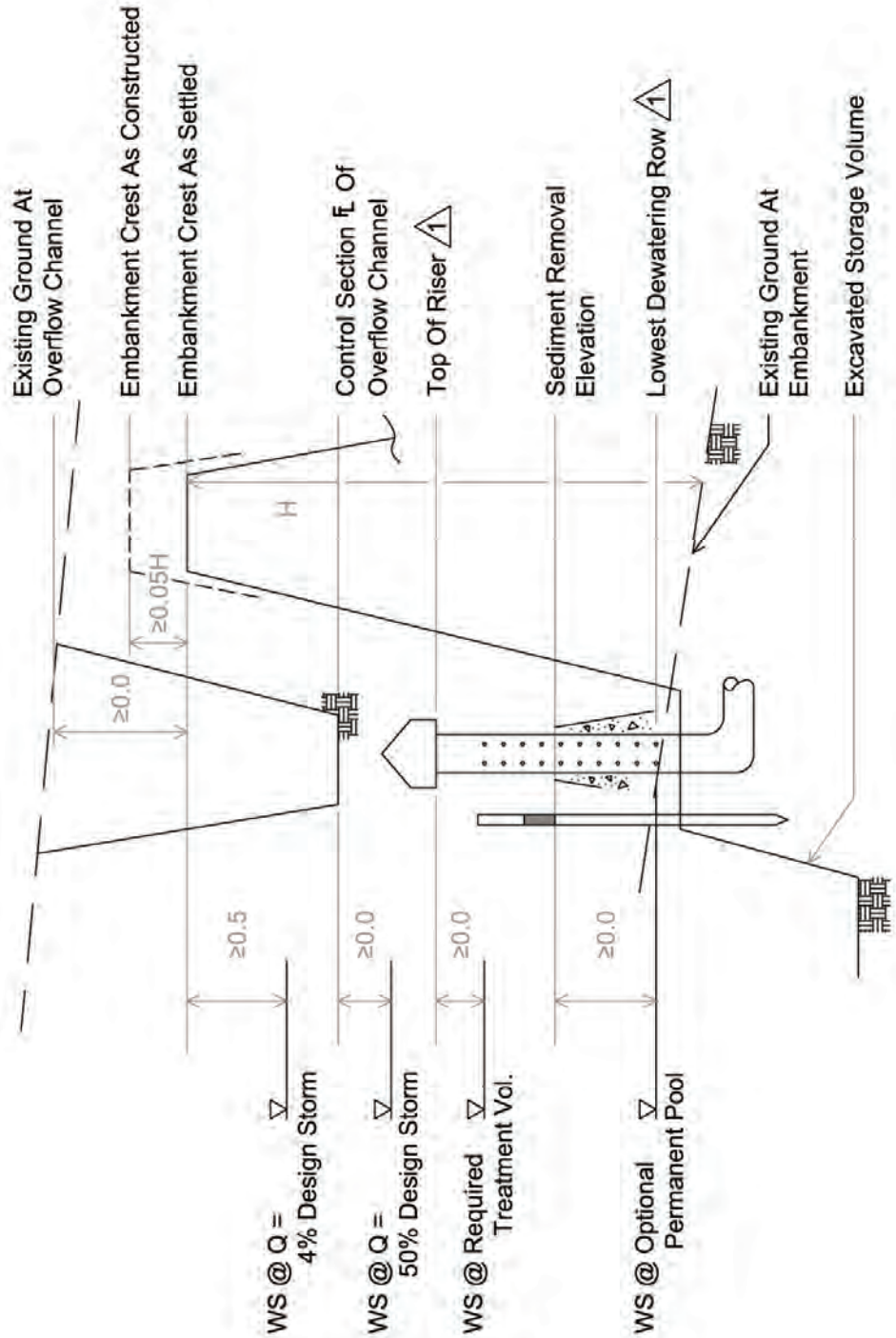

1 If A Skimmer Is Used For Dewatering, A Riser Is Still Required As A Primary Spillway.

FIGURE 1
RELATIONSHIPS BETWEEN SEDIMENT BASIN DESIGN ELEVATIONS

SECTION 5110 RUNOFF CONTROL

5110.1 General

This section provides descriptions sizing and application requirements for runoff control BMPs

5110.2 Stream Stabilization Measures

Where streambed grade control or stream bank erosion protection is part of the permanent construction, then show permanent stream protection BMPs on the pre-clearing plan and require they be install prior to general clearing. Refer to APWA 5600 or local municipalities design guidelines.

5110.3 Diversion Dikes, Gradient Terrace, and Slope Drains

Diversion dikes are low earth berms that capture sheet flow and divert it to an erosion resistant conveyance or a sediment trap or basin. Design details vary with use as follows:

A. Up-slope perimeter diversion: Only drainage areas greater than 0.5 acres are required to be diverted around the construction area. Diversion must terminate at an erosion resistant conveyance.

B. Down-slope perimeter control: Used to convey runoff to a sediment trap or a sediment basin.

C. Top of slope diversion: Placed to divert flow away from the face of a steep slope. Often used in conjunction with a slope drain to convey water to the toe of the slope. The diversion system must terminate in an erosion resistant conveyance or a sediment trap, or a sediment basin.

D. Limitations on diversion dikes: Where practical select diversion routes that are flatter than 5% slope. Flowline slopes over 5% and all diversions that are likely to remain in place longer than 21 days shall be seeded and protected with erosion control blankets. Diversion dikes with greater than 5 acre drainage area are to be designed as an erosion resistant construction phase conveyance.

E. Gradient terrace: A permanent diversion that interrupts a steep slope and conveys water at a low velocity to a stabilized outlet. Where used gradient terraces shall interrupt the slope at vertical separations not less than 20 feet of elevation change.

F. Slope Drain: A temporary pipe, laid across the surface of a slope to convey water from an up-slope diversion to another stable conveyance. A slope drain installation includes anchors to hold it in place, outlet protection, and an uphill head wall typically built from gravel bags.

5110.4 Erosion Resistant Construction Zone Conveyance

These conveyances collect and carry water through the site. Design flow for temporary system is the 50% storm (for small construction sites in the Kansas City metropolitan region, 2.9 cfs/acre is recommended). Refer to APWA 5600 for design parameters that are omitted here. Cost effective design may be realized by planning for parts of the permanent storm sewer system to fulfill this requirement. Allowable types are as follows:

A. Pipes. Either permanent storm sewer or temporary piping. Temporary pipe may be buried or anchored along the surface of the ground. Permanent pipes should have at a minimum velocity of 3 ft/sec at design flow to avoid clogging.

B. Check dams. Effective for drainage areas up to 10 acres. A series of check dams is usually required; space so that the base of the upstream dam is at the same elevation as the top of the next downstream dam.

   1. Where grading modifies the existing topography to such an extent that erosion resistant conveyance cannot be established prior to general clearing of the site, require material for check dams to be stored on the site. Require coordination with the daily weather forecast so that: at the end of any day, if greater than a 10% chance of rain is predicted prior to or on the day at which work is scheduled to resume, then check dams shall be placed before leaving the site.

C. Sod lined channel: Sod lined channels are applicable where slope is less than 5%, the velocity is less than 5fps, and the channel conveys relatively clean stormwater runoff, such as a channel sited on the up-slope perimeter of a construction site.

D. Continuous lining with TRM or rock. These are not covered by the EPA menu of BMPs but are allowed. Design reference is APWA 5600.

5110.5 Water Bar

A barrier to sheet flow applied on an angle to the contour so as to divert runoff to stable cover on the low side of a utility trench or other narrow construction zone. Diversion dike, compost berm, silt fence or other linear sediment control device identified in *Section 5158 Sediment Control* may be used. Except vegetated filter strip cannot be used as a water bar.

5110.6 Outlet protection

Generally means riprap or lined plunge pool at outlet of any conveyance but may include impact structures and other velocity reduction devices. Permanent protection measures may be installed as construction phase management measures. Refer to APWA 5600 or local municipal authority's design guidelines.

SECTION 5111 INACTIVE AREA RESTORATION

5111.1 General

This section lists approved cover for various conditions, protective measures required for steep slopes, and placement of additional sediment control devices to protect mild and moderate slopes on inactive areas.

5111.2 Inactive Area Defined

An inactive area is any part of the project site that may be reasonably managed by the contractor to not require further construction for a 14 days or longer. The need for subsequent construction at a location does not affect the inactive status so long as the delay is reasonably expected to be 14 days. Inactive areas usually occur whenever there is a change in the contractor's use of the site.

5111.3 Inactive Area Approved Cover Types

Permanent or temporary soil cover shall be placed over all inactive areas. Allowable cover types for specific slopes and conditions are listed in *Table 6 – Approved Cover Types*.

A. Cover types to use only with project specific municipal approval. These are proprietary products for which the industry has not yet developed voluntary standards. They may be effective but will have to be specified as individually approved products. Prior consultation with the municipal authority is necessary to select these methods.

   1. Chemical stabilization,
   2. Bonded fiber matrix

B. Cover types not recommended for inactive areas. Although these cover types may have effectiveness for short term site management such as protection from an individual event, or response to seasonal germination constraints; they have marginal overall effectiveness or require frequent reapplication. They should not be included in the original erosion control drawings.

   1. Surface roughening,
   2. Spray applied mulch without seed,
   3. Straw mulch without seed, except in winter

5111.4 Steep Slope BMPs

On slopes steeper than 15% apply all the following:

A. Divert water at top of slope by either a diversion dike to a protected slope drain or by design of an adverse slope away from the top of embankment. See *Section 5160 Runoff Control* for information about stabilized diversion dikes and slope drains.

B. Place cover approved for steep slopes on the face of the slope. See *Inactive Area Approved Cover Types* this section for approved cover types.

C. On slopes with an elevation change greater than 10 feet, place a compost berm or other linear sediment control device at vertical separations not to exceed 10 feet change in elevation. Alternately place permanent gradient terrace with stabilized outlets at same vertical spacing. See *Section 5160 Runoff Control* for information about gradient terraces.

D. Compost sock, silt fence or other linear sediment control device at toe placed sufficiently away from the actual toe to create a ponding area. Where the toe of the slope is not level use frequent breaks and return end uphill. See *Section 5158 Sediment Control* for placing compost sock, silt fence and other linear sediment control device.

5111.5 Interruption of Interior Slopes

Sheet flow on mild and moderate slopes in inactive areas shall be interrupted by a compost sock, silt fence or other linear sediment control device at the following locations:

A. On long slopes interrupt the slope at horizontal intervals not to exceed 75 feet.

B. For steep slopes, refer to *Steep Slope BMPs* this section.

5111.6 Interior Sediment Control

Sediment recapture devices should be placed as close to the source as possible.

A. Silt fence of other linear sediment control device should be placed to protect interior pavements from sediment laden runoff. The linear sediment control should be placed as close to the curb as practicable as soon after construction of the curb as practicable.

B. Although they do not have the storage capacity to be sufficient as a perimeter sediment control inlet protection devices should be place in all inlets, as early as practicable, except where doing so would create a ponding hazard to traffic or an erosion hazard to an unprotected downstream conveyance due to bypassed flow.

5111.7 Topsoiling

Topsoiling is the stockpiling and reapplication of topsoil. Topsoiling will reduce the runoff rate and to enhance establishment of vegetative cover. Topsoiling is in important permanent water quality BMP, but not strictly an erosion control measure. However, it is necessary to include stockpile information in the erosion control plans to adequately protect the topsoil resource.

SECTION 5200 - STREETS

CITY OF LEE'S SUMMIT, MISSOURI
DESIGN CRITERIA

These criteria shall be adhered to for the design of all streets within the City of Lee's Summit, Missouri and shall supersede KC Metro Chapter APWA Section 5200.

SECTION 5201 GENERAL

5201.1 **Introduction:** The purpose of these criteria is to provide uniform procedures for designing and checking the design of streets in Lee's Summit, Missouri. Specific criteria have been developed and are applicable to the types of conditions ordinarily encountered in local urban areas. Other special situations may be encountered that require added criteria or more complex design than included herein.

5201.2 Definitions: Refer to Section 1003.

5201.3 Abbreviations:

AASHTO	American Association of State Highway and Transportation Officials
ADT	Average Daily Traffic
AMC	City of Lee's Summit Access Management Code
APWA	American Public Works Association
ASTM	American Society for Testing and Materials
FHWA	U. S. Department of Transportation/Federal Highway Administration
MUTCD	Manual of Uniform Traffic Control Devices
NGVD	National Geodetic Vertical Datum
ITE	Institute of Transportation Engineers
R/W	Right-of-Way

5201.4 **Governing Criteria:** Design shall be in accordance with the latest edition of the following publications and the current interim supplements thereto except as modified herein or modified for the specific project:

A. Policy on Geometric Design of Highways and Streets, AASHTO.
B. Manual on Uniform Traffic Control Devices for Streets and Highways, FHWA.
C. Roadside Design Guide, AASHTO.
D. Design of Pavement Structures, AASHTO.

SECTION 5202 FUNCTIONAL CLASSIFICATION OF STREETS:

Refer to the City of Lee's Summit Access Management Code for information regarding the functional classification of streets.

SECTION 5203 GENERAL STREET DESIGN CRITERIA:

5203.1 **Design Criteria:** This section governs the general design requirements for streets by classification. See Table LS-1 in Section 5205. All street design is subject to approval by the City of Lee's Summit, Missouri.

5203.2 **Modifications:** Design variances shall be in accordance with Section 1002 of this manual.

5203.3 **Cross Slopes:** The finished cross slopes within the limits of the right-of-way shall be between one quarter (1/4) inch vertical to one (1) foot horizontal (2%), minimum, to one-half (1/2) inch vertical to one (1) foot horizontal (4%), maximum, except for sidewalks which must meet ADA requirements.

Outside of paved areas along roadways, Fore slopes shall be 4:1 maximum. Back slopes shall be 3:1 maximum, 4:1 or flatter is desired.

5203.4 **Tangent Length:** No tangent length shall be required between reverse curves for residential access and residential local streets. The minimum tangent length between reverse curves shall be 100 feet for collector streets and commercial/industrial local streets. Major and minor arterial streets shall comply with current AASHTO guidelines.

5203.5 **Street Intersection Spacing:** Refer to the City of Lee's Summit Access Management Code for information regarding the alignment and spacing of intersections.

5203.6 **Intersection Angle:** It is desirable for all intersections to meet at approximately a 90° angle. Skewed intersections should be avoided and in no case should the angle be less than 80°.

5203.7 **Intersecting Minor/Major Arterial Streets:** Where any minor or major arterial streets intersect each other, the crowns of both streets shall be uniformly transitioned into a plane at the intersection. Changes from one cross slope to another should be gradual.

5203.8 **Curb Radii:** When two streets of different classification intersect, the higher classification street shall govern the curb radii dimension listed in Section 5203.1. Equivalent three-center compound curves may be used in lieu of a single radius curve if the design vehicle can be accommodated. Curb ends ~~facing the flow of traffic~~ shall have a five-foot taper from full height to matching existing condition.

5203.9 **Sight Distance at Intersecting Streets:** Refer to the City of Lee's Summit Access Management Code for minimum intersection sight distances. The Engineer shall submit calculations for intersection sight distances to the City for review and concurrence at each stop, yield, or uncontrolled intersection approach.

5203.10 **Considerations for Connection to Existing and Future Streets:** Consideration shall be given to the horizontal and vertical alignment of roadways where they connect to existing streets or where roadways may be extended in the future. Where a new street is

to connect to an existing street the entire width of the existing pavement shall be saw cut to its full depth, and:

A. Existing Asphalt Street: All deteriorated or cracked asphalt within five feet of the connection point shall be removed to a point where sound material is found.
B. Existing Concrete Street: All deteriorated or cracked concrete shall be removed to the joint closest to the connection point. ~~Existing pavement is to be saw cut for the entire width of the street to a minimum depth of six inches.~~

5203.11 **Pavement Sections:** The minimum pavement thicknesses shown in Tables LS-2 and LS-3 apply to Residential streets (Access, Local, and Collector) and Commercial/Industrial streets (Local and Collector). For Arterial streets a pavement design shall be completed by a professional engineer and shall be based upon project specific traffic and geotechnical engineering studies. Geotechnical reports shall be prepared by a civil engineer specializing in the field of geotechnical engineering and registered in the state of Missouri. Traffic studies shall be prepared in accordance with the qualifications in the Access Management Code.

A. Pavement Design Standards: Pavement thicknesses shall be designed in general accordance with AASHTO's *Guide for Design of Pavement Structures, 1993.*

1. Minimum AASHTO pavement design parameters for arterial streets are as follows:
   a. Design Life: 35-years
   b. ADT: Based upon traffic study
   c. Truck Traffic: Percentage of truck traffic shall be based upon traffic study
   d. Subgrade Support: CBR and k values shall be determined by the project specific geotechnical report
   e. Stabilized Subgrade: Stabilized subgrade shall not be used as the subgrade soil strength. It shall be treated as "sub-base" layer, and the underlying native soils shall be used for subgrade values
   f. Terminal Serviceability (p_t): 2.5
   g. Reliability: 95% (Z_R = -1.645).

2. The pavement design report must show all the actual parameters used for the design, as well as the design method used.

3. Arterial street pavements shall include stabilized subgrade. Subgrade stabilization shall be (a) flyash treated subgrade, (b) lime treated subgrade or (c) geogrid-reinforced aggregate base.

4. Arterial Street Widening – No Pavement Design required
   a. Uncurbed or Interim Street Sections – The widened pavement shall be the same type as existing and shall use the crushed aggregate option for subgrade stabilization. Widening of asphalt sections shall have a minimum of 10 inches of asphalt, and widening of concrete sections shall match the existing.

b. Curbed or improved Streets – The widened pavement shall be the same type as the existing pavement. The thicknesses of each layer shall be equal to the existing, adjacent pavement but not less than that for the uncurbed or interim street section, above.

5.

6.

7. Concrete pavement joint details and joint layout patterns, dowelling and tie bar layout shall be designed and included in the engineering plans. The residential local/access and residential collector pavement do not require dowels at the transverse joints but do require tie bars along longitudinal joints.

5203.12 **Pavement Transitions:** Reduction in pavement width in the direction of traffic flow shall be accomplished by a taper. The minimum length for merging taper shall be determined by the formula L=WxSxS/60 where posted speeds are 45 mph or less. The formula L=WxS should be used for roadways having a posted speed limit greater than 45 mph. Under either formula, L=taper length in feet, W=width of the transition in feet, and S=design speed in mph.

5203.13 **Cul-de-sacs:** At locations where streets are to be terminated and a vehicular connection between adjacent streets is not required, the termination shall be a cul-de-sac. Such cul-de-sac shall be constructed with a minimum radius of 39 feet to the back of curb if there are no islands located in the cul-de-sac. At the end of a cul-de-sac, the minimum design speed = 10 mph, with corresponding minimum horizontal radius = 39 feet, minimum stopping sight distance = 75 feet; minimum K Crest = 3 along centerline, and minimum K Sag = 5 (2 w/ lighting) along centerline. The minimum grade in cul-de-sacs shall be 2.0% along centerline and 2.0% for all other slopes. The maximum grade in cul-de-sacs shall be 6% along centerline and 2.0% for all other slopes.

5203.14 **Temporary Turn-Arounds:** At locations where streets will be temporarily terminated and which will be extended at a later date, and said street extends beyond the intersection of an adjacent street more than 150 feet, a temporary cul-de-sac shall be constructed with a minimum radius of thirty-five (35) feet. The temporary cul-de-sac shall be constructed of asphaltic concrete with a minimum depth of eight inches. Curb and gutter will not be required. The cul-de-sac shall be constructed within the limits of a temporary easement.

Temporary Turn-Arounds shall be located so that they do not interfere with permanent development. They should normally be located on property adjacent to the property to be served. For new subdivision plats, they should be located on property beyond the limits of the plat.

5203.15 **Driveways:**

A. All driveway approaches within public right of way shall be concrete in accordance with Section 2300.

B. Driveways shall attain a minimum elevation of six inches above the gutter elevation within the right-of-way with a maximum grade of 8%. The algebraic difference in grades at the right-of-way on crest drives shall be 8% maximum and on sag drives shall be 12% maximum. The maximum recommended driveway grade outside the right-of-way is 15%.

C. Driveways shall be spaced and aligned in accordance with the City of Lee's Summit Access Management Code (AMC).

5203.16 **Access for the Disabled:** Refer to Section 5300 of this Manual for design criteria and guidance for Accessible Routes

5203.17 **Street Lighting:** All street lighting shall be designed in accordance with Section 5800 of the Lee's Summit Design and Construction Manual.

5203.18 **Storm Drainage:** All storm drainage shall be designed in accordance with Section 5600 of the APWA design criteria.

5203.19 **Underdrains:** Underdrains shall be required at all low points, cut-fill transitions lines, exposed rock ledges intersecting subgrade, and other locations that have known or expected subsurface moisture problems.

5203.20 **Erosion Control within R/W Limits:** As a minimum, all grass areas in the R/W shall be seeded and mulched to control erosion on to the roadway. All construction projects that have exposed grading require temporary erosion control measures. Temporary erosion control must be approved by the City Engineer.

5203.21 **Survey Monument Boxes:** Monument boxes shall be installed at all quarter section corners involved in the street construction. The monument boxes shall be set by a Registered Land Surveyor licensed in the state of Missouri.

5203.22 **Traffic Impact Studies:** Refer to the City of Lee's Summit Access Management Code for information regarding traffic impact studies.

5203.23 **Obstructions:** Rigid structures such as poles, signs and hydrants shall be placed a minimum horizontal distance of 1.5 feet from the back of curb to edge of obstruction. When required, guardrail and barricades shall be installed in accordance with the AASHTO Roadside Design Guide or city policy. Vertical clearance of 14.5 feet shall be provided. Along sidewalks, a minimum vertical clearance of seven feet shall be provided.

5203.24 **Traffic Signals:** All Traffic Signals shall be designed in accordance with Section 5900 of the Lee's Summit Design and Construction Manual.

5203.25 **Roundabouts**: These criteria shall be adhered to for the design of all roundabouts to be constructed within the City of Lee's Summit, Missouri.

A. Design Criteria: Roundabout design shall be in accordance with the latest edition of AASHTO, FHWA Roundabout Design Guide, and MUTCD.

1 **Codes and Standards:** These criteria are established to provide uniform procedures to aid the design engineer in preparing improvement plans for projects in the City of Lee's Summit. These criteria are not intended to be an ironclad set of rules that restrict the design engineer from utilizing innovative design; however, they may be modified only with prior authorization of the City Engineer.

2 **Roundabout Design:** This section outlines several basic requirements for roundabouts:

ROUNDABOUT DESIGN CRITERIA TABLE			
	Single Lane (Compact)	Single Lane (Suburban)	Multi-Lane (Suburban)
Roadway Classification	Residential Local/Access	Collector Arterial	Arterial
Design Speed	15 mph	20 mph	25 mph
Design Vehicle 1	P	BUS	BUS
Design Vehicle 2	BUS	WB-50	WB-67
Inscribed Diameter	90'-120'	120'-150'	150'-220'

a. Crosswalks shall be ADA compliant, 10 feet wide, cut through the splitter island, and be located at least 25 feet behind the yield line.
b. Splitter islands shall be at least 50 feet long and have a barrier curb with a mountable nose at the approach.
c. Mountable curb, i.e. CG-2 or modified CG-1 with 3" 1:1 vertical face, shall be used around the truck apron adjacent to the circulating lane.
d. Barrier curb shall be used around the truck apron adjacent to the central island.
e. Approach alignment should be radial. A slight left offset is permitted with approval of the City Engineer. A right offset is prohibited.
f. Equal spacing between entries is desired, except that roundabouts with three entries should have angles as close to 90 degrees as possible.
g. Approach flare should be at least 80 feet long.
h. On-street parking shall be prohibited within 50 feet of the splitter island.

i. Entry lane widths should range from 14 feet to 16 feet.

j. Circulatory lane width is generally as wide as the maximum entry width (but no more than 120% of the entry) and shall remain constant throughout the roundabout. Circulatory lane widths generally decrease as the size of the inscribed diameter increases (i.e. single lane roundabouts may have a circulating lane width of 16 feet while multi-lane roundabouts may have a circulating lane width of 14 feet).

k. The exit lane should be as wide as or wider than the circulating lane.

l. Truck aprons, when used, should be 3 feet to 13 feet wide having a cross slope of 3%-4% away from the central island. The apron shall be constructed of colored and/or textured paving materials to differentiate it from the roadway. The truck apron shall be permeable and contain an under drain system so that excessive runoff does not cross the travel lanes.

m. A landscape strip shall be provided between the curb and sidewalk/multi-use trail. The landscape strip shall have a minimum width of 2 feet and preferred minimum width of 5 feet.

B. DESIGN PROCESS: Roundabout design is an iterative process requiring the designer to consider operational and safety effects of the geometric elements. The recommended process for designing a roundabout is generally as follows:

1. Identify the intersection context. The intersection context includes roadway classification and typical section, environment in which the roundabout will be located (residential, commercial, green field, retrofit, etc.), and the type of adjacent traffic control along the corridor (single-lane roundabouts, multi-lane roundabouts, signals, and stop control).
2. Establish the design vehicle. See Roundabout Design Criteria Table in this section. Design Vehicle 1 should be able to navigate any movement within the roundabout without using the truck apron and shall maintain full lane control. Design Vehicle 2 should be able to navigate any movement within the roundabout while using the truck apron.
3. Perform operational analysis to determine the number of lanes required. The number of lanes (entry, exit, and circulatory) should be kept to a minimum while accommodating an acceptable level of service.
4. Prepare and submit a conceptual design. A scale of 1”=50’ is preferred.
5. Check that the design vehicle(s) can be accommodated for all movements at all legs of the roundabout. The vehicle path shall maintain a minimum 2-foot clearance between the tire track and the curb. Drawings shall be submitted illustrating each vehicle path.
6. Check the design speeds of all movements at all legs of the roundabout for Design Vehicle 1. See Roundabout Design Criteria Table in this section for typical design speeds. Provide a summary of design speeds calculated for each of the five curves to include approach, curve, radius, speed, and speed differential information.

a. The entry speed should not exceed the design speed.
b. The exit speed should be higher than the entry and circulating speeds.
c. Speed differentials should not exceed 6 mph and shall not exceed 12 mph.

7. Check sight distance. Submit a drawing showing that adequate stopping sight distance is provided. This drawing shall include vertical and horizontal clearance, for each approach, exit crosswalk, and circulating lane. Submit a drawing showing that adequate intersection sight distance is provided, including vertical and horizontal clearance, for each vehicle entry conflict with entering stream and circulating stream.
8. Reiterate the process until a concept plan is approved by the City Engineer.

5203.26 **Other Design Criteria:** Design criteria not covered by this document shall be in accordance with the most current edition of A Policy on Geometric Design of Highways and Streets by the American Association of State Highway and Transportation Officials (AASHTO) or other AASHTO design guides.

SECTION 5204 GENERAL PLAN REQUIREMENTS:

5204.1 **Scope:** This section governs the preparation of plans for street projects.

5204.2 **General:** The plans shall include all information necessary to build and check the design of streets and related appurtenances. The plans shall be arranged as required by the City Engineer. Applicable standard plans shall be included by reference to standard plan number and title. Plans shall be sealed by a Registered Professional Engineer in the state of Missouri.

5204.3 **Scales:** Plans shall be drawn at the following minimum scales. Larger scales may be needed to clearly present the design. Bar scales shall be shown on each sheet for each scale.

Plan:	1 inch = 20 feet (preferred), 1 inch = 50 feet (minimum)
Profile:	
Vertical:	1 inch = 5 feet (preferred), 1 inch = 10 feet (minimum)
Horizontal:	Scale Shall Match Plan Scale
Drainage Area Map:	
On Site:	1 inch = 200 feet
Off Site:	1 inch = 1,000 feet
Structural Plans:	1 inch = 1 foot
Graphic Drawings:	Standard Engineering (scale varies)

5204.4 **Sheet Sizes:** Full-sized plan sheets shall be 22 inches by 34 inches. Half-sized plan sheets shall be 11 inches by 17 inches. Plan and profile shall be drawn on combined or separate plan and profile sheets to minimum scales shown in Paragraph 5204.3.

5204.5 **Types of Sheets in Plans: The plans shall generally consist of:**

1. Title Sheet
2. General Notes and Quantities
3. General Layout Sheets
4. Plan and Profile Sheets
5. Drainage Area Map
6. Storm Water Sheets
7. Traffic Signal Plans
8. Lighting Plans
9. Utility Plan and Profile Sheets
10. Erosion Control Plans
11. Pavement Marking Plans
12. Signing Plans
13. Traffic Control Plans
14. Standard and Special Detail Sheets
15. Curb Ramp Detail Sheets
16. Cross-Section Sheets

Each sheet shall contain a sheet number, including the individual sheet number and the total number of sheets, proper project identification and date. The engineer's seal shall appear on each sheet per state licensing requirements.

5204.6 **Minimum Required Information for Title Sheet:**

1. Name of project.
2. Project number (where applicable).
3. Index of sheets included in plans.
4. A location map adequately showing project location in relation to major streets with north arrow and scale.
5. Signature block for city approval.
6. The project control bench marks shall be identified as to location and elevation per NGVD datum. A minimum of two (2) bench marks are required for any project (may be shown on an optional Project Control Sheet inserted directly after the Title Sheet).
7. Name, address and telephone number of the consulting engineer and owner/developer as well as signature block for the owner/developer.
8. List containing name and telephone number of each utility company and the State One-Call System.
9. A legend of symbols shall be shown that applies to all sheets (may be shown on an optional General Notes Sheet(s) inserted directly after the Title Sheet).

10. Design speed, posted speed and expected ADT numbers plus other traffic information as required by the City Traffic Engineer.
11. Engineer's seal, signed and dated.

5204.7 Minimum Required Information for General Layout Sheet(s):

1. General Notes: Minor construction notes shall appear on the proper plan and profile sheet.
2. North arrow and bar scale. Scale of the general layout map shall be one (1) inch equals one hundred (100) feet.
3. Layout shall include name of subdivision, block designation (if any), lot designation or proposed block and lots, all street names, street alignment with back of curb lines, and an accurate tie to at least one quarter section corner and at least one additional physical permanent feature. An unplatted tract shall have an accurate tie to at least two (2) quarter section corners.
4. Boundary line of project area.
5. Schematic layout of existing conditions and proposed improvements shall be shown; including but not limited to: all proposed streets, sidewalks and utility improvements including storm drainage, sanitary sewers, water lines, street lights, traffic signals, etc.
7. Typical street sections.

5204.8 Minimum Required Information for Plan and Profile Sheets:

1. North arrows and bar scale.
2. Elevation and location of all applicable benchmarks per NGVD datum.
3. Existing and proposed streets with names and pavement widths.
4. Property lines properly identified as to existing or proposed lot, block and subdivision. Survey base line with adequate ties to land lines.
5. All existing and proposed utilities such as power, gas, oil, water, telephone, sewer, and other items shall be properly located in conformance with the best information available in the records of the owner of such facilities, or field location, and identified as to size, type, owner, and material.
6. All existing and known proposed improvements within 50 feet each side of right-of-way and 200 feet beyond the project limits shall be shown at the proper locations. This shall include, but is not limited to, existing items as paved streets, curb and gutters, driveways, culverts, fire hydrants, utility poles, trees, shrubs, fences, walls, houses, and shall be identified as to type, size, material, etc. as may be applicable.
7. All existing and proposed permanent and temporary easements and right-of-way information, including ownership shall be shown on the plans.
8. Locations and widths of existing and proposed sidewalks and multi-use trails.
9. Horizontal curve data and vertical curve data (K value, stopping sight distance, intersection sight distance, length of curve, curve delta, curve tangent length, middle ordinate, PC, PT, PI, PVI, PRC, etc.).

10. Center line stations shall be marked at 100-foot intervals and at other pertinent points.
11. Top back of curb elevations shall be shown at maximum increments of 15 feet or quarter points, whichever is less, along the curb returns at street intersections. Points for curb opening to curb ramps will shown location and elevations of opening to be installed during curb placement.
12. Plan view of all ADA ramps showing all slopes of the ramps, landings and sidewalks.
13. Profile shall show existing grade as a dashed line, proposed finish grades or established street grades by solid lines.
14. Storm sewer criteria shall be in accordance with the City of Lee's Summit Design and Construction Manual.
15. Elevations shall be shown on the profile at a minimum interval equal to the horizontal scale for tangents and half the horizontal scale for curves. Elevations shall also be shown for all other pertinent points.
16. Approximate grading limits.
17. Location of test borings if taken.
18. For residential development, finished contours shall be shown on street plan sheets. The finished contours shall be screened or gray-scaled.

5204.9 Minimum Required Information for Cross-Section Sheets:

1. Street cross section at each station showing existing grade by dashed lines and proposed grade by a solid line. Cross sections to show existing grade lines a minimum of ten (10) feet beyond the right-of-way lines or grading limit, which ever is further. The center line and right-of-way limits shall be shown along with the proposed improvements.
2. Center line elevation of top of pavement.
3. Center line cross sections shall be shown at all intersecting streets and driveways.
4. Location of existing and proposed underground utilities.
6. Additional cross sections shall be shown as required to clearly describe the extent of grading operations.
7. For residential development, a mass grading plan shall be required in lieu of cross sections.

5204.10 Minimum Required Information for Standard and Special Detail Sheets: Detail sheets shall be included to show all details of appurtenances, materials, and construction. Details shall conform to the requirements of the City and are to be drawn clearly and neatly with proper identifications, dimensions, materials and other information necessary to insure the desired construction.

5204.11 Minimum Required Information for Curb Ramp Detail Sheets: **See Section 5304**

5204.12 Minimum Required Information for Traffic Control Plans:

1. Limits of any road closures, sidewalk closures, or multi-use trail closures shall be shown along with the traffic control devices used to effect the closure. Any closure restrictions, speed limit, length of time, etc. shall be indicated on the plans.
2. Detour plan shall be designed for traffic affected by closures. Detour signing used in the detour route shall be included in the detour plan.
3. Typical lane closure or lane shift plans including taper lengths and spacing of all channelizing devices. Types and spacing of all traffic control signs and markings shall be shown.
4. A traffic control plan shall be prepared for each phase of construction.
5. All traffic control shall be designed using the traffic control devices and application principals contained in the MUTCD.

SECTION 5205 FIGURES:

TABLE LS-1: GENERAL STREET DESIGN CRITERIA

TABLE LS-2: MINIMUM ASPHALT PAVEMENT THICKNESSES

TABLE LS-3: MINIMUM PCC PAVEMENT THICKNESSES

TABLE LS-1: GENERAL STREET DESIGN CRITERIA

	Major Arterial	Minor Arterial	Commercial/ Industrial Collector	Residential Collector	Commercial/ Industrial Local	Residential Local	Residential Access
Number of Through Traffic Lanes	2 – 7	2 – 5	2 – 3	2 – 3	2	2	2
Minimum Width of Travel Lanes (1) (Excludes Curb & Gutter)	11 – 12 ft.	11 – 12 ft.	12 ft.	12 ft.	12 ft.	12 ft.	10.5 ft.-12 ft.
Number of Parking Lanes	0	0	0	0 – 2	0 – 2	0 – 2	0 - 2
Width of Parking Lanes	0	0	0	8 ft.	8 ft.	8 ft.	8 ft.
Right-of-Way Width (2)	100 – 140 ft.	80 – 100 ft.	60 – 80 ft.	60 ft.	50 - 60 ft.	50 ft.	50 ft.
Design Speed (3)	40 – 45 mph	35 – 45 mph	35 mph	30 mph	25 mph	25 mph	25 mph
Stopping Sight Distance (4)	305 - 360 ft.	305 - 360 ft.	250 ft.	200 ft.	155 ft.	155 ft.	155 ft.
Minimum K Crest Vertical Curve (5)	44 - 84	44 - 84	29	19	12	12	12
Minimum K Sag Vertical Curve (6)	64 - 96 (55 with lighting)	64 - 96 (40 with lighting)	49 (27 with lighting)	37 (20 with lighting)	30 (17 with lighting)	26 (14 with lighting)	20 (11 with lighting)
Minimum Radii for Horizontal Curves (7)	---	---	510	335	200	200	200
Sidewalks (8)	2	2	2	2	2	1 – 2	1 – 2
Minimum Distance Between Sidewalk/Path and Right of Way line	3 ft.	3 ft.	1 ft.	1 ft.	1 ft.	1 ft.	1 ft.

	Major Arterial	Minor Arterial	Commercial/ Industrial Collector	Residential Collector	Commercial/ Industrial Local	Residential Local	Residential Access
Maximum Grade	6%	7%	6%	8%	6%	10%	12%
Minimum Grade	1.0%	1.0%	1.0%	1.0%	1.0%	1.0%	1.0%
Minimum Curb Return Radius (9)	35 ft	35 ft	35 ft	30 ft	35 ft	25 ft	25 ft
Maximum Grade at Intersection with Stop	---	---	---	3% (within 75 ft)	3% (within 75 ft)	5% (within 50 ft)	5% (within 25 ft)
Minimum Grade Across Intersections	2.0%	2.0%	2.0%	2.0%	2.0%	2.0%	2.0%

NOTES:

(1) The minimum width of travel lanes may be reduced to 11 feet when approved by the City Engineer. The 10.5 feet lane width for residential access streets shall only be used in a planned development where a minimum of four off-street parking spaces are provided for each dwelling unit. Wider lanes may be required as determined by the City Engineer, based on design vehicle or adopted master planning documents.

(2) Consideration should be given to providing a minimum 15 foot wide utility easement along each side of the right-of-way for residential access streets and 10 foot wide easements for all other streets

(3) Lower design speed, with corresponding horizontal curve, vertical curve, and intersection sight distance design criteria may be used under special conditions when approved by the City Engineer.

(4) Stopping Site Distance in table is for level roadways. Additional distance will be required on downgrades. Refer to minimum desired Intersection Site Distance in AASTHO "Greenbook" for intersections. Greater distance between the two (intersection / stopping) sight distances shall govern.

(5) Minimum K values for crest and sag vertical curves shall be in accordance with AASHTO – A Policy on Geometric Design of Highways and Streets. Minimum K values for sag vertical curves may be reduced to the shown comfort limits if an engineered continuous lighting system is provided along the street. K values shall not exceed 167 for crest or sag conditions...

(6) The minimum radii shown are based on the AASHTO design for low-speed urban streets with no superelevation. Superelevation can only be used when approved by the City Engineer. Minimum horizontal radii for arterial streets must be approved by the City Engineer.

(7) Sidewalk may be replaced by Shared Use Path along streets as determined by City Engineer, based upon adopted master planning documents.

(8) Radius measured to the back of curb. Radius should not exceed 50 feet. Radii in table are minimums. Radius shall be increased as needed to accommodate the design vehicle(s), as determined by the City Engineer.

(9) Confidence Level for Pavement Design: Residential Local/Access – 85%, Residential Collector – 90%, Commercial Industrial Local/Collector – 90%

TABLE LS-2: MINIMUM ASPHALT PAVEMENT THICKNESSES

Street Classification	Pavement Option	AC Surface (in.)	AC Base (in.)	MoDOT Type 5 Base (in.)	Geogrid(1)	Chemical Subgrade Stabilization(2) (in.)
Residential Local/Access	A	2	4	6	--	6
	B	2	4	10	Geogrid	--
Residential Collector	A	2	5.5	6	--	9
	B	2	5.5	12	Geogrid	--
Commercial Industrial Local/Collector	A	2	7.5	6	--	9
	B	2	7.5	12	Geogrid	--

TABLE LS-3: MINIMUM PCC PAVEMENT THICKNESSES

Street Classification	PCC (in.)	Aggregate Base (in.)	Subgrade Stabilization(1) (in.)
Residential Local/Access	6	4	--
Residential Collector	6	4	6
Commercial Industrial Local/Collector	8	4	9

(1) Subgrade Stabilization and 4” aggregate base may be replaced by approved geogrid and 6” of aggregate base

SECTION 5300 – INCIDENTAL CONSTRUCTION

CITY OF LEE'S SUMMIT, MISSOURI
DESIGN CRITERIA

These criteria shall be adhered to for the design of all streets within the City of Lee's Summit, Missouri and shall be in addition to KC Metro Chapter APWA Section 5300.

ADD the following:

SECTION 5304 GENERAL ACCESSIBLE ROUTE CRITERIA

Introduction: The purpose of these criteria is to provide uniform procedures for designing and checking the design of accessible routes in Lee's Summit, Missouri. Specific criteria have been developed and are applicable to the types of conditions ordinarily encountered in local urban areas. Other special situations may be encountered that require added criteria or more complex design than included herein.

Definitions: Refer to Section 1003 of this Manual.

Abbreviations:

AASHTO	American Association of State Highway and Transportation Officials
ADA	Americans with Disabilities Act
ADAAG	ADA Accessibility Guidelines
APWA	American Public Works Association
ASTM	American Society for Testing and Materials
DOJ	Department of Justice
FHWA	U. S. Department of Transportation/Federal Highway Administration
MUTCD	Manual of Uniform Traffic Control Devices
NACTO	Nation Association of City Transportation Officials
PROWAG	Proposed Guidelines for Pedestrian Facilities in the Public Right of Way
R/W	Right-of-Way

Governing Criteria: Design shall be in accordance with the latest edition of the following publications and the current interim supplements thereto except as modified herein or modified for the specific project:

A. Americans with Disabilities Act
B. Proposed Guidelines for Pedestrian Facilities in the Public Right of Way
C. Urban Bikeway Design Guide, NACTO
D. Policy on Geometric Design of Highways and Streets, AASHTO.
E. Manual on Uniform Traffic Control Devices for Streets and Highways, FHWA.
F. Roadside Design Guide, AASHTO.

5304.1 **Design Criteria:** This section governs the general design requirements for accessible routes. See Table LS-5 in Section 5305. All design is subject to approval by the City of Lee's Summit, Missouri.

5304.2 **Modifications:** Design variances shall be in accordance with Section 1002 of this manual. Design variances to ADA / PROWAG criteria are not permissible.

5304.3 **Cross Slopes:** Cross slopes for sidewalks, trails, paths, and other pavements primarily used for pedestrian traffic must meet ADA requirements.

5304.4 **Pavement Sections for Accessible Routes:** The minimum pavement thicknesses shown in Tables LS-2 and LS-3 apply to all accessible routes.

5304.5 **Temporary Turn-Arounds:** At locations where accessible routes will be temporarily terminated and which will be extended at a later date, a temporary turning landing and turning space shall be constructed meeting PROWAG guidelines.

Temporary Turn-Arounds shall be located so that they do not interfere with permanent development. They should normally be located on property adjacent to the property to be served. For new subdivision plats, they should be located on property beyond the limits of the plat.

5304.6 **Driveways:**

A. All driveway approaches within public right of way shall be concrete in accordance with Section 2300.

B. Driveways shall attain a minimum elevation of six inches above the gutter elevation within the right-of-way with a maximum grade of 8%. The algebraic difference in grades at the right-of-way on crest drives shall be 8% maximum and on sag drives shall be 12% maximum. The maximum recommended driveway grade outside the right-of-way is 15%.

C. Accessible pedestrian routes shall be extended across driveways in compliance with ADA and should have the typical width of the connecting sidewalk path.

5304.7 **Access for the Disabled:** Accessible routes shall be designed in accordance with the Public Rights-of-Way Access Guidelines (PROWAG) current draft version proposed by the Access Board, and subsequent approvals.

1. Ramps shall be required at all planned sidewalk-curb intersections in accordance with standard practice and current PROWAG criteria.

2. A turning space shall be required at locations where turning movements are required.

a. Typically level landings are located at the top of perpendicular ramps and the bottom of parallel ramps.

b. Turning spaces shall be installed at the top or bottom of blended transitions.

3. Non-standard driveways and alleys will also be designed with ADA accommodations.

*Note: PROWAG and ADA does not allow for construction tolerances. Values given are absolute maximums allowed for compliance. Therefore all slopes shall be designed to a lesser value to allow for tolerances during construction, such that the as-built conditions do not exceed regulatory guidelines.

5304.8 **Minimum Required Information for Trail, Sidewalk and Curb Ramp Detail Sheets:** Details for each ramp to be constructed on the project will be shown. Details may be shown in either plan view or orthogonal view. Details will include the following information:

1. Location and elevation of curb openings.
2. Detectable Surface area and location.
3. Maximum distance between the detectable surface and back of curb.
4. Running slope and cross slope for ramps.
5. Running slope and cross slope for level landings (turning spaces).
6. Running slope, cross slope and length of ramp extension to transition from curb ramp to sidewalk.
7. Transitions between from ramp to curb and from ramp to sidewalk.
8. Transition curbs along back of sidewalk or grading, as needed, to blend ramps into surrounding slopes.
9. Location of isolation and construction joints and required joint details for construction.
10. Type and location of steel tie bars.
11. Cross sections of the ramp. Section A-A will be along the long axis of the ramp. Section B-B will be across the width of the ramp. Section C-C will along the curb opening of the ramp.
12. Typical sections for sidewalks, trails, shared use paths
13. Typical cross sections for driveways intersecting accessible routes.
11. All cross slopes for trails, sidewalks, paths and accessible routes.

(Continued on next page)

5305 FIGURES:

TABLE LS-5: ACCESSIBLE ROUTE DESIGN CRITERIA

	Design Slopes	**PROWAG Max Allowed Slope***	**Minimum Width**
Turning Space	1.5% all directions	2.0% all	5 ft. x 5 ft.
Ramp Running Grade	Less than 7.5%	8.33%	5 ft
Sidewalks: ≥ 3 ft. green space between sidewalk and curb	1.5% cross slope Running slope no greater than street profile grade	2.0% cross slope	5 feet
Sidewalks: abutted to back of curb	1.5% cross slope Running slope match street profile grade	2.0% cross slope	6 feet

TABLE LS-6: MINIMUM ACCESSIBLE ROUTE THICKNESS SECTIONS

Type of Route	**PCC(3) Thickness**	**Agg Base Thickness**	**Comments**
Sidewalk(1)	4”	4”	Transverse joints shall be spaced to match width of sidewalk; Joints may be tooled or sawn.
Shared Use Path(2)	6”	4”	Transverse joints shall be spaced to match width of trail, but not greater than 12 ft.; joints shall be sawn.
ADA Ramp	6”	4”	

(1) Minimum width of sidewalks shall be 5 feet, with a typical 5-foot green space between sidewalk and back of curb. A 3 to 5-foot green space may be used based on site conditions and upon approval of the City Engineer. If less than 3-foot green space, sidewalk shall be at least 6-feet wide.

(2)Minimum width of paths shall be 10 feet

(3)Accessible routes shall be paved using KCMMB 4k concrete

DIVISION V
DESIGN CRITERIA

SECTION 5300 INCIDENTAL CONSTRUCTION

Approved and Adopted this 18th day of December, 2002

Kansas City Metropolitan Chapter
of the American Public Works Association

Table of Contents

Section	Title	Page No.
5301	**GENERAL**	
5301.1	Introduction	53-1
5301.2	Definitions	53-1
5301.3	Abbreviations	53-1
5301.4	Governing Specifications	53-2
5302	**LOCAL BICYCLE FACILITY DESIGN GUIDANCE**	
5302.1	Foreword	1
5302.2	Definitions Relating to Bicycles	2
5302.3	Mitigating Hazards to Bicycle Travel	5
5302.4	Types of Bicycle Facilities	11
5302.5	Designating On-Road Bikeways	16
5302.6	Providing Designated Off-Road Bicycle Facilities	23
5302.7	Special Design Treatments	26
5302.8	Bikeway Signing and Marking	34
5302.9	Bicycle Parking	36
5302.10	Appendix A: Key Reference Documents	40
5302.11	Appendix B: Quick Reference Guide	41
5302.12	Appendix C: Bicycle Facility Selection Guide	44
5302.13	Appendix D: Bikeway Facility Cross-Section	46
5302.14	Appendix E: Miscellaneous Local Examples	47

DIVISION V
DESIGN CRITERIA

SECTION 5300 INCIDENTAL CONSTRUCTION

SECTION 5301 GENERAL

5301.1 **Introduction:** The purpose of this criteria is to provide uniform procedures for designing and checking the design of bicycle facilities in the Kansas City Metropolitan area. Specific criteria have been developed and are applicable to the types of conditions ordinarily encountered in local urban and suburban areas. Other special situations may be encountered that require added criteria or more complex design than included herein.

In addition to this criteria, bicycle facilities shall be designed to conform to applicable codes, regulations, and ordinances as established by the local governing agency. Bicycle facilities shall be designed in accordance with the classifications determined by the local governing agencies and shall conform to APWA Standard Drawing Typical Sections, unless otherwise approved. Plans for said improvements shall be submitted to the local governing agency for approval and shall include all information as may be required or described hereinafter.

5301.2 **Definitions:**

A. **City Engineer:** The term City Engineer, as used in this criteria, shall represent the state, county, city, or other governmental body's representative responsible for technical decisions concerning the project. Such person may be the Director of Public Works, City or County Engineer, Administrator or any other person empowered by the governing agency to make such decisions.

B. **Engineer:** The term Engineer, as used in this criteria, shall represent the Engineer or Designer who performs the actual design work. The design shall be accomplished under the direction of a Registered Professional Engineer. Northing in this criteria is intended to alter or circumvent local, state, or federal laws or regulations regarding liability and/or responsibility for such designs.

5301.3 **Abbreviations:**

AASHTO	American Association of State Highway and Transportation Officials
ADT	Average Daily Traffic
APWA	American Public Works Association
ASTM	American Society for Testing and Materials
FHWA	U.S. Department of Transportation/Federal Highway Administration
MARC	Mid-America Regional Council
MUTCD	Manual of Uniform Traffic Control Devices
NGVD	National Geodetic Vertical Datum
ITE	Institute of Transportation Engineers
R/W	Right-of-Way

5301.4 **Governing Specifications:** Design shall be in accordance with the latest edition of the following specifications and the current interim supplements thereto except as modified herein or modified for the specific project:

A. A Policy on Geometric Designs of Highways and Streets, AASHTO.

B. Manual on Uniform Traffic Control Devices for Streets and Highways, FHWA.

C. Roadside Design Guide, AASHTO.

D. Design of Pavement Structures, AASHTO.

DIVISION V
DESIGN CRITERIA

Section 5302 Local Bicycle Facility Design Guidance
For The Metropolitan Kansas City Region
December 2002

5302.1 Foreword

This section is intended to provide supplemental guidance to local and state governments in the planning, designing and construction of bicycle facilities in the metropolitan Kansas City area. The section draws significantly on national guidelines and standards; however, because guidelines and standards are updated periodically, the responsibility is upon the reader to check the most current information.

This section describes a wide variety of bicycle facility accommodations and in each case provides appropriate guidance for use. The word *shall* is used wherever standards have been established. The word *should* is used to give guidance in the recommendation of appropriate use, and the word *may* is used wherever innovative treatments are discussed.

The MARC Bicycle Element of the Long-Range Transportation Plan recommends a regional bicycle system for the Kansas City metropolitan area. This regional system is both a composite of local bicycle plans adopted by area cities and counties and important connections between communities. While regional in its vision, the projects needed to complete the regional system will need to be implemented locally. The following guide is intended to foster regional uniformity in the planning, design, and construction of bikeway facilities by establishing common definitions, design guidelines and system marking devices. The Mid-America Regional Council and the Kansas City Chapter of the American Public Works Association developed this section jointly.

The following supplemental guidance is offered to assist the appropriate local and state agencies during the planning and design of local bicycle facilities within the Kansas City metropolitan area. Bicycle accommodations are most easily included during new construction or reconstruction of roadways. Appendix D of this section has been set aside to include bicycle facility cross-sections. These cross-sections will provide guidance for incorporating bikeway facilities into the design of new and reconstructed of roadways.

When implementation involves retrofitting an existing roadway to accommodate bicycle use, the project can become more complex. With each project, there may be unique challenges and circumstances. It is not possible to cover all of the possible retrofit scenarios and solutions here; however, this section provides general guidance for many common bicycle hazards and retrofit problems. Existing streets built with a curb and gutter section will often be viewed as having a fixed width and improvements will likely be limited to re-stripping the existing lanes, removing a travel lane or removing on-street parking.

This section has been prepared based on a thorough review by the MARC Bicycle Design Subcommittee of current planning guidelines, and design standards for bicycle facilities and has been found to be consistent with professional guidelines set forth by the American Association of State Highway and Transportation Officials (AASHTO), the *Manual on Uniform Traffic Control Devices* (MUTCD), the Federal Highway Administration (FHWA), the Missouri Department of Transportation (MoDOT) and the

Kansas Department of Transportation (KDOT). This section will require periodic updates to reflect changes in professional documents.

5302.2 Definitions Relating to Bicycles

The coordination of a regional bikeway system is simplified by using standardized terminology. Often terms such as "bicycle lane" and "bicycle path" may be used interchangeably, when in fact they are not synonymous. It is difficult to coordinate regionally when inconsistencies in the use and meaning of terms exist. Therefore, as local jurisdictions are developing and updating their own plans and policies, they are encouraged to use the following terms consistently with the definitions that follow. The following terms are listed in alphabetical order and shall be defined as follows when used in this section.

A. **Bicycle or Bike** – any vehicle propelled solely by human power upon which any person may ride, having two tandem wheels, except scooters and similar devices. The term bicycle for this section also includes three and four wheeled human powered vehicles, but not tricycles for children. (AASHTO p. 2)

B. **Bicycle Facilities** – a general term denoting improvements and provisions made by public agencies to accommodate and encourage bicycling, including designated bikeways, share the road signs, paved shoulders, wide-curb lanes, bicycle parking and storage and other supporting infrastructure. (AASHTO p.2)

C. **Bicycle Route** – see Signed Shared Roadway. In addition, the bicycle route sign designates preferred routes for bicycles. Bicycle and motor traffic share the roadway, so the preferred location is usually a secondary through street and is clearly marked as a bikeway according to MUTCD sign standards.

D. **Bicycle Lane** – A portion of a roadway that has been designated by striping, signing and pavement markings for the exclusive use of bicyclists. The bicycle lane may be as narrow as 4 ft or as wide as 6 ft depending on roadway characteristics. The bicycle lane is a regulatory bikeway because it restricts other uses. Bicycle lanes are appropriate on arterial and collector roadways. (AASHTO p.2)

E. **Bicycle Path or Bicycle Trail** – see Shared Use Path.

F. **Bicycle User Types** - A 1994 report by the Federal Highway Administration, Selecting Roadway Design Treatments to Accommodation Bicycles used the following general categories of bicycle user types (A, B, and C) to assist transportation planners and engineers in determining the impact of different facility types and roadway conditions on bicycles:

   1. Advanced (experienced) cyclists are generally using their bicycles as they would a motor vehicle. They are riding for convenience and speed and want direct access to destinations with a minimum of detour and delay. They are typically comfortable riding with motor vehicle traffic; however, they need sufficient operation space on the traveled way or shoulder to eliminate the need for them or a passing motor vehicle to shift position.

   2. Basic (novice) or less confident adult cyclists may also use their bicycles for transportation purposes, e.g., to go to the store or to visit friends, but prefer to avoid roads with fast busy

motor vehicle traffic unless there is ample roadway width to allow easy overtaking by faster motor vehicles. Thus, basic riders are comfortable riding on a neighborhood street, shared use paths and prefer designated facilities such as bike lanes or wide curb lanes on busier streets.

3. Children riding on their own or with their parents, may not travel as fast as their adult counterparts but still require access to key destinations in their community, such as schools, convenience stores, and recreational facilities. Residential streets with low motor vehicle speeds, well-defined bike lanes or shared used paths can accommodate children without encouraging them to ride in the travel lane of the busy roadways. (FHWA p. 1-2)

NOTE: The type B and C bicyclists benefit from a designated bikeway system because bikeways serve to "host" or encourage bicycling by increasing the comfort level of the rider.

G. **Bikeway** – AASHTO defines "bikeway" as a generic term for any road, street, path or way that is specifically designated (with appropriate MUTCD signing & pavement markings) for bicycle travel, regardless of whether such facilities are designated for the exclusive use of bicycles or are to be shared with other transportation modes. Appropriate design treatments to accommodate bicyclists are based on roadway characteristics, motor vehicle traffic volumes and speeds or in the case of shared use paths, other users. Bikeways include the shared use path, bicycle lane, and bicycle route. The FHWA categorizes bikeways into three classes listed below:

1. Class I Bikeway – see Shared Use Path.

2. Class II Bikeway – see Bicycle Lane.

3. Class III Bikeway – see Signed Shared Roadway.

H. **Bicycle Signing** – The Manual on Uniform Traffic Control Devices (MUTCD) defines the appropriate use of all bicycle-related signs. Bicycle signs are categorized by type: regulatory, warning, marker, and guide.

I. **Bikeway System** – consists of a combination of specific roads, streets, paths or ways designated by the appropriate jurisdiction having authority with appropriate direction and information route markers, with or without specific bicycle route numbers. The system uses a combination of bikeway types to create a continuous and connected system.

NOTE: AASHTO uses the term "Bicycle Route System" (AASHTO p.3) instead of "Bikeway System."

J. **Off-Road Bicycle Facility** – See Shared Use Path. In addition, an off-road bicycle facility may be designated for exclusive bicycle use in areas where heavy use is expected and facilities for other shared use path users are available.

K. **On-Road Bicycle Facility** – Any bikeway that has either exclusive use or shares the traveled way and/or shoulder of a roadway with motor vehicle traffic.

L. **Rail-Trail** – a shared use path, either paved or unpaved, built within the right-of-way of an existing or former railroad. ”Rails with Trails” facilities refer to dual-purpose corridors and “Rails to Trails” facilities refer to single purpose corridors. The Kansas City Area Transit Authority (KCATA) Trolley Track Trail is an example of a local rail-trail facility. (AASHTO p.3)

M. **Shared Roadway** – any roadway that is open to both bicycle and motor vehicle travel. This may be an existing standard street (i.e. standard 12 foot lanes), a street with wide-curb lanes or paved shoulders. On a shared roadway, bicyclists and motorists share the same travel lanes. A motorist may have to cross into the adjacent travel lane to pass a bicyclist. Shared roadways carry the majority of bicycle trips. (AASHTO p.3)

N. **Shared Use Path** –a bikeway that is physically separated from motorized vehicular traffic by an open space or barrier and either within the highway right-of-way or within an independent right-of-way. Shared use paths may also be used by pedestrians, skaters, wheelchair users, joggers and other non-motorized users. (AASHTO p.3)

NOTE: Other terms that are often used in place of a shared use path are multi-use trail or multi-use path. Any trail or path that is designed to be used by more than one mode of transportation is by definition multi-use. The term trail is more commonly associated with recreational and nature oriented facilities. The regional greenway plan, *MetroGreen*, uses the term trail.

O. **Paved Shoulder** – the portion of the roadway contiguous with the traveled way for accommodation of stopped vehicles for emergency use and for lateral support of sub-base, base and surface courses. Paved roadway shoulders on rural roadways provide a suitable area for bicycling, with few conflicts with faster moving motor vehicle traffic. Care should be given to the application of “rumble strips” which impair bicycle movement. (AASHTO p.3)

P. **Sidewalk** – “the portion of a street or highway right-of-way designed for preferential or exclusive use by pedestrians.” Generally, bicycle use of sidewalks is not prohibited except in commercial districts. (AASHTO p.3)

Q. **Signed Shared Roadway** (signed bicycle route) – Signed shared roadways are designated by bike route signs to designated a preferred route for bicycle use. (AASHTO p. 7) The MUTCD defines appropriate markings and sign placement.

R. **Traveled Way** – The portion of the roadway for the movement of vehicles, exclusive of shoulders. (AASHTO p.3)

S. **Wide-Curb Lane** – AASHTO describes the wide–curb lane as “the lane nearest the curb having a width that is wider than a standard lane 12 feet (3.6 m) providing extra space so that the lane may be shared by motor vehicles and bicycles.” In general, 14 feet (4.2 m) of usable lane width is the recommended width for shared use in a wide curb lane; however, additional space is needed where grades are steep or sight line distance poor. Any width that is less than 14 feet (4.2 m) but wider than 12 feet (3.6 m), can be beneficial for shared use by bicyclists and motorists. Like paved shoulders or bike lanes, the wide-curb lane provides additional space for bicycle travel. (AASHTO p.17) The MoDOT General Pedestrian and Bicycle Guide uses the term “Wide Shared Lane” to define a 14 foot wide travel lane.

5302.3 Mitigating Hazards to Bicycle Travel

A critical step to making Kansas City regional area a more bicycle-friendly region is to embrace the concept that every street is a bicycling street.

> "To varying extents, bicycles will be ridden on all roadways where they are permitted. All new roadways except those where bicyclists will be legally prohibited, should be designed and constructed under the assumption that they will be used by bicyclists." AASHTO 1999

Planners should investigate the opportunity to make at least minor or marginal improvements to bicycle travel. Designing, constructing and retrofitting roadways to better accommodate bicycle use means mitigating basic hazards to bicycle travel. These hazards include wheel-eating drainage grates, dangerous railroad crossings, unresponsive traffic signals, general spot improvements and enhanced maintenance practices. For the most part, the mitigation of hazards is inexpensive and can be accomplished within routine maintenance and improvement schedules and budgets.

Hazard mitigation and roadway maintenance practices are addressed in the 1999 AASHTO Guide for the Development of Bicycle Facilities on pages 60, 64 and 73. (See also, the Quick Reference Guide on Appendix B of this report.)

A. Drainage Grates

Drainage grate inlets are potential problems to bicyclists, especially the design commonly installed in the Kansas City area. Parallel bar drainage grates are the worst design because they tend to trap bicycle tires. (See Figure 1)

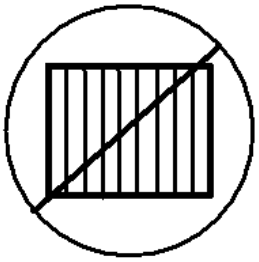

Figure 1. Parallel Bar Design

Most state transportation departments and many local governments have eliminated use of the parallel bar drainage grate and instead substitute bicycle-friendly and hydraulically efficient inlets such as those depicted in Figure 2.

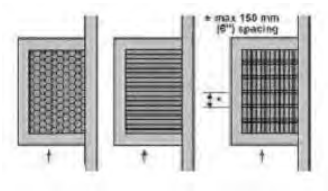

Figure 2. Bicycle Friendly Drainage Grate

On new construction, curb inlets are preferred to grate inlets wherever possible (See Figures 2 & 3). When grate inlets are installed, they should not be of the parallel-bar design (See Figure 1).

A program for identifying and replacing existing parallel-bar grates should be a high-priority of any local jurisdiction that seeks to mitigate hazards to bicyclists. At a minimum, the temporary correction recommended by AASHTO should be undertaken in popular bicycling corridors. This interim solution involves welding steel cross straps perpendicular to the parallel bars at 4" center-to-center maximum spacing to provide a maximum safe opening between the straps, or retrofitting the grates with

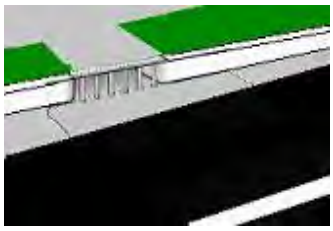

Figure 3. Curb Inlet Design

prefabricated cross bars. The welded bars or retrofitting with prefabricated cross bars should be installed flush with the pavement to avoid creating a new hazard for cyclists.

B. Railroad Crossings

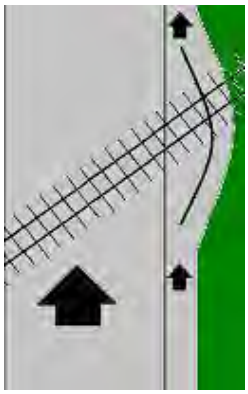

Figure 4. Preferred Railroad Crossing Design

When bikeways or roadways cross railroad tracks at grade, the crossing should ideally be at right angle to the rails. The bicyclist has to contend the danger of trapping a tire and approaching traffic from behind. It is best to provide a 90-degree approach because this allows the bicyclist to see approaching traffic while preparing to cross railroad tracks. This can be accomplished either as a separate path or a widened shoulder as shown in Figure 4. This will allow a bicyclist to cross railroad tracks at a right angle (90 degrees) without veering into the path of overtaking traffic. If sufficient width to allow bicyclists to cross at an angle of at least 75 degrees is not possible and where train speeds are low, commercially available flangeway fillers may enhance bicyclist operation. While AASHTO allows for a minimum of 45 degree crossing, this may be insufficient for road bikes with narrow tires. This angle also makes it more difficult to see approaching traffic. The roadway approach should be at the same elevation as the rails (1999 AASHTO Guide for the Development of Bicycle Facilities, p. 60). Warning signs and pavement markings should be installed in accordance to MUTCD.

C. Bicycle Detection Technologies

When a bicycle approaches an intersection, there are several means of detecting and facilitating its movements. Most of the innovations are passive detection devices such as loop detectors and infrared or video detection systems. Other methods are activated, such as the bicycle push-button, similar to that used by pedestrians.

AASHTO discusses clearance intervals for traffic signal timing, and states that traffic-actuated signals should be sensitive to bicycles (p. 64). A 1985 study completed by the city of San Diego examined various loop detectors for their bicycle sensitivity. Recommendations from this report include the following loop designs to accommodate bicycles in various roadway applications:

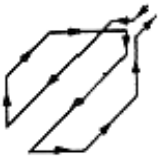

Figure 5.

Diagonal Quadruple Loop
Due to the sensitivity over the entire width of the loop, the diagonal quadruple is the preferred option for shared roadway situations where the exact location of the bicycle cannot be easily predicted. (See Figure 5)

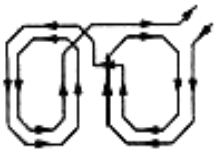

Figure 6.

Quadruple Loop
The recommended loop type for use within bicycle lanes is the quadruple. This design detects most strongly over the center wires and is relatively insensitive to vehicles in adjacent lanes. (See Figure 6)

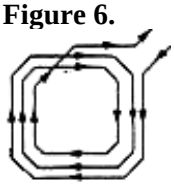

Figure 7.

Standard Loop
Standard loops are least desirable for detecting bicycles because they are most sensitive over the wires that form the outer edge of the loop. Unless bicyclists know exactly where to position themselves over the loop, they will not be detected. (See Figure 7)

AASHTO recommends the use of a bicycle detector pavement marking to indicate the optimum location for bicycle detection. A standard pavement symbol can be found on page 66 of the AASHTO guide.

Alternatives to pavement loops include use of video cameras to detect bicycle and other traffic and use of microwave sensors.

D. **Bicycle Detection Using Video Cameras**

Video systems are used to activate treatments such as signal timing specifically needed to assist bicyclists to cross at signalized intersections. This system is useful at signalized intersections where there are dedicated bicycle lanes. The video system uses detectors drawn in video images to sense the presence of bicycles in bicycle lanes at signalized intersections.

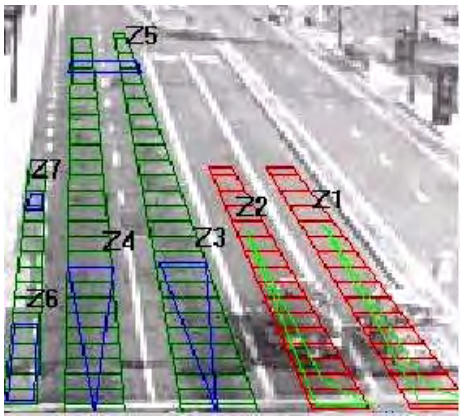

Figure 8. Video Layout

Figure 8 shows the layout of bicycle lane loops drawn in a video image on the approach to a signalized intersection. The computer system is capable of sensing up to 60 different detection zones within a single intersection for a cost comparable to loop detectors buried within the pavement. The loops to detect motorized vehicle traffic are also shown. Areas labeled Z 7 and Z 6 are bicycle lane detection zones.

1. **Advantages to the video system:**
   - Special signal timing can be activated to allow bicyclists sufficient time to cross the intersection. This treatment enhances safety for this mode of transportation.
   - It will detect bicycles that do not contain iron, unlike loop detectors.
   - It is not affected by asphalt work and may be used to help direct traffic during construction.

2. **Disadvantages of the video system:**
   - Longer phases needed for bicyclists may disrupt signal progression if cycle lengths are based on shorter phases.
   - Since bicyclists do not always stop in the same place while waiting to cross a street, cameras may either falsely detect a bicyclist or may not detect a bicyclist that is present, in both cases causing unnecessary delay for road users.
   - Weather conditions such as thick fog and blinding sunlight can reduce the effectiveness of the camera.

E. Remote Traffic Microwave Sensor Detection (RTMS)

Microwave sensors detect bicycles at signalized intersections using frequency modulated continuous wave radio signals that detect objects in the roadway. This method can detect slow moving or stopped vehicles unlike Doppler. It is also marked with a time code, which gives information on how far away the object is. This technology can also be used to count vehicles. Many new systems have storage and data download capabilities to remote locations. (See Figure 9)

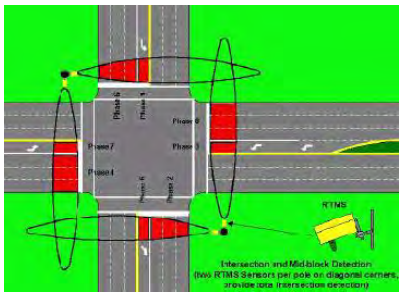

Figure 9. RTMS Layout

1. **Advantages of this technology:**
   - Can detect slow moving or stopped objects.
   - Not affected by extremes in light or temperature, weather conditions such as fog that may obstruct video cameras, or road/utility work.
   - RTMS can detect bicycles that do not contain iron.
   - The waves refract around large vehicles so smaller vehicles are still “visible.”

2. **Disadvantages of this technology:**
   - Microwave systems are more expensive than standard loops.
   - According to Electronic Integrated Systems, Inc (EIS), RTMS has never been deployed for the sole purpose of detecting bicycles.
   - It may have trouble detecting smaller objects, including young children, or young children on bicycles.

F. Bicycle Push Button/Bar

The bicyclist activates the signal by pushing a bar or button similar to those used for pedestrians, but the button is installed in a location convenient for bicyclists and the signal timing is set appropriately for bicyclists. The sign plate located above the push button/pad/bar indicates that it is not for the use of pedestrians. (See Figure 10) The larger the surface of the button, the easier it is for cyclists to use, thus a push pad is preferential to a push button, and a push bar is preferential to a push pad, as it can be actuated without removing one's hands from the handlebars.

Figure 10. Bicycle Push Button

1. **Advantages of this technology:**
   - Allows separate signal timings for different user needs
   - Usually less expensive than other detection treatments

2. **Disadvantages of this technology:**
   - Location of push button does not, in most cases, allow the bicyclist to prepare appropriately for through or left turning maneuvers at the intersection.
   - Forces the bicyclist to stop completely to actuate the signal.

Fine-tuning existing traffic detection systems may also improve bicycling conditions. Signal timing should include a minimum green time that allows cyclists to remount their bikes and travel across the intersection, and a yellow/red time that provides a safe bicycle clearance interval. Generally, 2 – 3 seconds added to the minimum automobile green time is appropriate; a yellow interval of 3.0 to 6.0 seconds offers sufficient time for a cyclist to come to a complete stop or enter the intersection legally; and an all-red clearance interval greater than 2.0 seconds is needed to clear bicycles from most intersections.

G. Transition Areas

Abrupt changes in the pavement width of the right travel lane or shoulder should be discouraged. While skilled bicyclists will ride in a straight line by guiding off the lane stripe, many riders will unpredictably move right or left as the lane or shoulder widens or narrows.

Special transition problems frequently occur at bridges and structures, either when traffic lanes merge to cross a narrow bridge, or when a narrow roadway approaches a new, wider bridge. In the first situation, warning may be provided to both bicyclists and motorists by using the standard MUTCD W5-2 "Narrow Bridge" sign (see Figure 11) in advance of any bridge or culvert having a roadway clearance less than the width of the approach pavement.

Figure 11. MUTCD W5-2

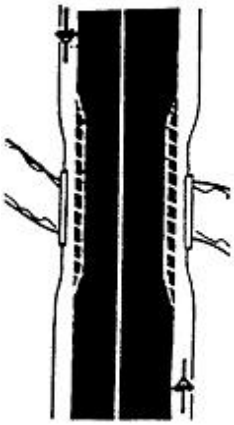

Figure 12.
Transition Area

An additional treatment for unavoidable obstacles such as narrow bridges is to use zebra warning striping on the bridge shoulders, as recommended by the New Jersey DOT and depicted in Figure 12 to the left. The stripes function to divert motor vehicle traffic away from the bridge parapet thus providing additional operating space on the right-hand side of the bridge for cyclists.

For the second situation, safe bicycle passage may be accommodated in the transition from a wide structure to a narrow roadway by continuing the extra operating width of the bridge shoulders or wide outside lanes for at least 100 feet on either side of the bridge. If on- or off-ramps or intersections are present, the shoulder or wide curb lane treatment should continue at least as far as the ramps or intersection.

The best way to avoid transition problems is to design adequate width into the bridge during construction. Several new bridges in the greater Kansas City area have accommodated bicycle traffic in this way and at the same time improved conditions for motorists.

H. Adequate Maintenance

The operation, maintenance and policing of bicycle facilities should be established prior to construction. Additional hazards to bicycle travel may include gaps in longitudinal paving joints, potholes, bumps and other pavement surface irregularities, which may be eliminated through low-cost maintenance repairs.

Routine maintenance practices, or lack thereof, may also increase bicyclist sensitivity to gravel, sand, glass, and other roadway debris. Piling snow on the right-hand pavement edge adds debris to roadway shoulders and travel areas where bicyclists most frequently ride. Failure to routinely sweep these areas effectively reduces the operating space for bicycles on a roadway.

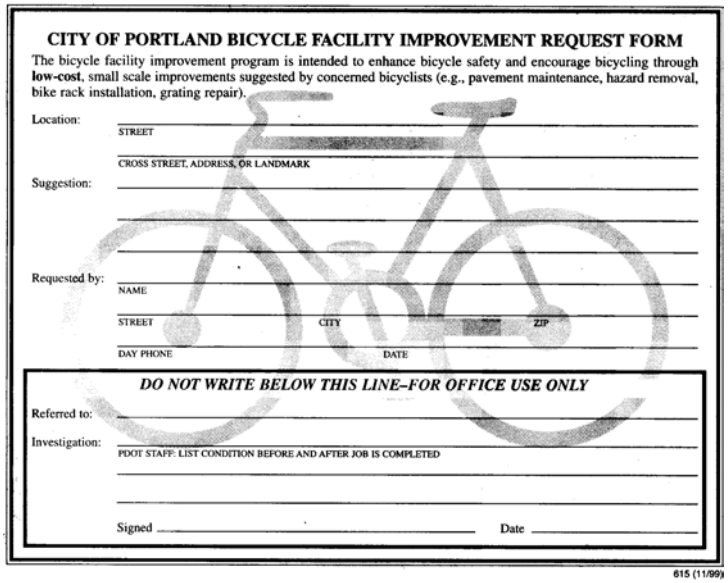

CITY OF PORTLAND BICYCLE FACILITY IMPROVEMENT REQUEST FORM

The bicycle facility improvement program is intended to enhance bicycle safety and encourage bicycling through **low-cost**, small scale improvements suggested by concerned bicyclists (e.g., pavement maintenance, hazard removal, bike rack installation, grating repair).

Location: STREET

CROSS STREET, ADDRESS, OR LANDMARK

Suggestion:

Requested by: NAME

STREET CITY ZIP

DAY PHONE DATE

DO NOT WRITE BELOW THIS LINE–FOR OFFICE USE ONLY

Referred to:

Investigation: PDOT STAFF: LIST CONDITION BEFORE AND AFTER JOB IS COMPLETED

Signed Date

615 (11/99)

Figure 13. City of Portland Bicycle Facility Improvement Request Form.

The city of Seattle has developed an innovative program for locating such minor repairs and maintenance problems. The request form is a tool for the public to help identify maintenance needs. Other cities have adopted this same model. The City of Portland uses the post card size request from shown above in Figure 13. The bicycle improvement program is intended to enhance bicycle safety and encourage bicycling through low-cost, small-scale improvements suggested by concerned bicyclists (e.g., pavement maintenance, hazard removal, bicycle rack installation, and drainage grate

repair. A similar program is recommended for local communities within the Kansas City area, combined with enhanced street cleaning for implementation.

I. Construction Zones

Construction zones can account for an inordinate amount of the safety and liability problems. This is unfortunate and unnecessary because preparing a detour plan can ensure public safety and minimizes disruption where possible.

Hazards to bicyclists may include: signs, equipment, or debris in the bikeway, blocked access without advance warning, rough pavement or gravel without advance warning, poor pavement transitions, especially when parallel to the line of travel (e.g.: metal plate edges or pavement removal/resurface areas which are not tapered). To address these hazards, it is suggested that detour signs be posted to direct bicyclists to an alternate route. Warning signs alert riders to construction or rough surfaces and debris should be removed regularly. (See Figure 14)

Figure 14. Bicycle Detour Sign, City of Denver, Co.

Conclusion: The previously discussed hazards should be mitigated on all roads to be used by bicyclists. As stated in AASHTO, "The majority of bicycling will take place on ordinary roads with no dedicated space for bicyclists. Bicyclists can be expected to ride on almost all roadways." Therefore, hazard removal should occur on all roadways except for freeways where bicycle travel is prohibited by law.

5302.4 Types of Bicycle Facilities

The Kansas City region uses a variety of bicycle facilities to accommodate bicycle travel. The term "bicycle facility" refers to improvements and provisions made by any public agencies in the greater Kansas City area to accommodate and encourage bicycling, including but not limited to: wide-curb lanes, paved shoulders, designated bikeways, bicycle parking and storage and other supporting infrastructure. The purpose of each type of bicycle facility, its appropriate application and special considerations are discussed in this section. Professional judgment and sound engineering practices must be used on the site-specific application of any design treatment.

This document describes a wide selection of possible bicycle facility accommodations. There is no one size-fits-all bicycle facility or highway (roadway) design that suits every bicyclist and no bicycle facility design can compensate for a lack of bicycle operator skill and competency. As a result, sound planning and design principles applied within any given transportation corridor may necessitate more than one option to meet the travel and access needs of all potential users. (Paraphrased AASHTO p. 6)

In the Kansas City region, typical shared roadways with standard 12-foot travel lanes can accommodate bicycle traffic if traffic volumes are low, travel speeds are low and the roadway is free of hazards. However, various treatments can improve safety for bicyclists along high demand corridors where high traffic volumes and speeds make it prudent to do so. Wide-curb lanes, paved shoulders, and bicycle lanes can be used to accommodate bicycle traffic. Widened roadways provide additional operating room for bicyclists and offer several benefits to motorists, including better accommodation for trucks, buses and other wide vehicles and assisting turning vehicles.

A. Shared Roadways

Shared lane facilities include all streets with no special provisions for bicycle travel, typically featuring 12-foot lane width or less with no shoulders. (See Figure 15) There are no specific bicycle standards for most shared roadways. Most bicycle travel within the Kansas City region takes place on shared roadway facilities. The shared roadways function well for bicycle travel on local streets where low volume and low speeds are combined.

Figure 15. Shared Roadway

1. Facility Purpose

- To provide access to the many origins and destinations dispersed throughout a community and to other bicycle facilities.
- To allow bicycles access to all streets and roadways, regardless if designated bicycle facilities are provided.

2. Appropriate Applications

- On local streets in residential areas with low motor vehicle traffic volumes and speeds.
- On low volume rural roads with good sight distance.
- When local streets are needed to be a part of the designated route system to provide continuity and linkage throughout the community.
- The shared roadway should present no problem for group A riders, and will normally be adequate for group B/C bicyclists under slow speeds and volume conditions (FHWA p.23)

3. Special Considerations

- Streets with general shared lane conditions that are to be designated as part of a signed bikeway system should have hazards to bicycle travel mitigated.
- Street parking should be restricted in areas of critical width to improve safety of bicyclists.
- Shared roadways do not usually require or warrant any special signage for bicyclists, unless they are potential alternate routes or critical links in the overall bikeway system. In these cases, many state and municipal agencies carefully evaluate traffic volumes and speeds.
- A report has been issued by the University of North Carolina, Bicycle and Pedestrian Information Center, title "Bicycle Facility Selection: A Comparison of Approaches." In this report more than 20 national, state and local bicycle facility manuals are compared. The report can be downloaded without charge via the Bicycle and Pedestrian Information Site at www.bicyclinginfo.org. For purposes of the Kansas City region comparison we have focused on the approaches practiced in North America alone and more specifically on those practices in the mid-west region.

  Where 12 foot or less lanes are considered for bicycle routes no two approaches are identical however, there are some general ranges that emerge. If we follow the Wisconsin approach, as a general rule shared roadways are acceptable for bicycle use on local streets with traffic volumes of 2,000 or less AADT and traffic speeds of 25 mph or

less. Where volumes and speeds are higher, additional lane width becomes increasing important. Bike lanes and wide curb lanes should be used to improve bicycling conditions.

- Traffic calming devices may be considered to lower traffic volumes or speeds.
- In rural areas, the suitability of a shared roadway decreases as traffic speeds increase, especially on roads with poor sight distance. Where bicycle use or demand is potentially high, rural roads should be widened to include paved shoulders where the travel speeds and volumes are high.
- The share the road sign may be used along shared roadways where the presence of bicyclists is high to increase awareness and improve safety.

B. Design Treatments To Provide Additional Width

Two design treatments are recommended to provide additional roadway width – paved shoulders on rural roadways and wide curb lanes in urban situations. These treatments offer definitive improvements to bicycle travel.

1. Paved Shoulders

The AASHTO Guide for the Development of Bicycle Facilities notes that in rural areas "adding or improving paved shoulders often can be the best way to accommodate bicyclists" – and they have the additional attraction of providing a variety of benefits to motorists and other road users as well. As warranted, shoulders may be designated as host bicycle facilities by signing and marking for preferential use similar to bicycle lanes. (See Figure 16)

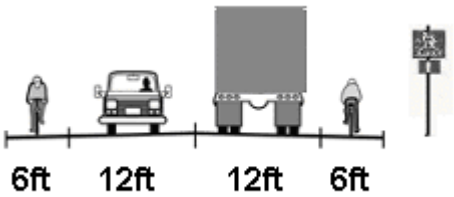

Figure 16. Paved Shoulders. (Bike Route Designation Optional)

Paved shoulders are provided on rural highways for a variety of safety, operation and maintenance reasons. Most of these advantages apply to both shoulders on rural highways and to marked, on-street bicycle lanes on urban roadways.

a. Facility Purpose

Safety--highways with paved shoulders have reduced accident rates, as paved shoulders:

- Provide space to make evasive maneuvers;
- Accommodate driver error by adding recovery area to regain control of a vehicle;
- Provide space for inoperative vehicles.
- Provide increased sight distance for through vehicles and for vehicles entering the roadway (in cut sections or brushy areas in rural areas, and in urban areas with many sight obstructions).
- Provide lateral clearance to roadside objects such as guardrail, signs and poles;
- Contribute to driving ease and reduced driver strain.
- Reduce passing conflicts between motor vehicles and bicyclists and pedestrians.

- Provide for storm water discharge farther from the travel lanes, reducing hydroplaning. This also reduces splash and spray to following vehicles and nearby pedestrians and bicyclists.

Operation--highways with paved shoulders can carry more traffic, as paved shoulders:

- Provide more intersection and safe stopping sight distance;
- Allow for easier exiting from travel lanes to side streets and roads;
- Provide greater effective turning radius for trucks;
- Provide space for off-tracking of truck's rear wheels in curved sections;
- Provide space for disabled vehicles, mail delivery and bus stops;
- Provide space for bicyclists to ride at their own pace;
- Provide space between motor vehicles and pedestrians, increasing pedestrians' level of comfort

Maintenance--highways with paved shoulders are easier to maintain as paved shoulders:

- Provide structural support to the pavement;
- Discharge water further from the travel lanes, reducing the undermining of the base and sub-grade;
- Provide space for maintenance operations and snow storage;
- Provide space for portable maintenance signs;
- Facilitate painting of fog lines.

b. Appropriate Applications

- On roads without curb and gutter.
- On high-speed, rural arterials that serve cyclists.

c. Special Considerations

- "Rumble strips or raised pavement markers … are not recommended where shoulders are used by bicyclists unless there is a maximum clear path of 0.3 m (1 ft) from the rumble strip to the traveled way, and a minimum 1.2 m (4 ft) from the rumble strip to the outside edge of paved shoulder, or 1.5 m (5 ft) to adjacent guardrail, curb or other obstacle." (AASHTO p.17)
- Rumble strips should only be installed when an adequate unobstructed width of paved surface remains available for bicycle use.
- It is desirable to increase the shoulder width where higher bicycle use is expected, if motor vehicle speeds exceed 45 mph or the percentage of trucks, buses or recreational vehicles is high.
- Gaps should be provided periodically within the rumble strip to allow bicyclists cross access.
- Small stones, sand and other debris often collects on roadway shoulders. Usually the air turbulence caused by passing traffic creates a sweeping action. For this reason, most bicyclists prefer to ride on that portion of the shoulder nearest to traffic to avoid debris. Periodic shoulder sweeping should be provided along identified bicycle routes and routes of high bicycle usage.
- Rumble strips are not advisable along urban roadways.

- Shoulders should be paved and maintained to an equivalent surface standard as regular travel lanes.
- Paved shoulders that are intended for bicycle use should not be routinely used as right turn lanes for vehicular traffic.

2. Wide Curb Lanes

A wide curb lane is a travel lane nearest the curb having a width that is wider than the standard lane 12 feet (3.6 m). The extra width provides space so that motor vehicles and bicycles may share the lane. Where considering a wide curb lane this guide recommends a, 14 foot (4.2 m) lane width for shared use; however, a curb lane with wider than 12 feet (3.6m) can provide marginal benefits to both bicyclists and motorists. A lane that is less than 14 feet (4.2 m) wide but, wider than 3.6m (12 feet) can be beneficial for shared use by bicyclists and motorists. Beyond hazard mitigation, no special design is required.

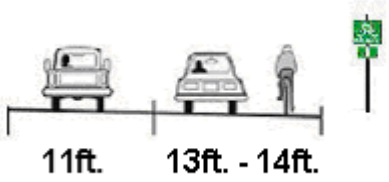

Figure 17. Wide Curb Lanes. (14 Foot Width Recommended, Bike Route Designation Optional)

a. Facility Purpose
- To better accommodate both bicycles and motor vehicles on arterial streets and roadways by providing additional operating room.
- To maintain the motor vehicle capacity of a right-hand lane when bicyclists also use it.
- To increase the roadway capacity by the number of bicyclists capable of being accommodated.
- To allow motor vehicles to pass bicycles without having to change lanes.
- To minimize both real and perceived operating conflicts between bicycles and motor vehicles.

b. Appropriate Applications
- Where there is insufficient room for a dedicated bicycle lane or pave shoulders.
- Where there are frequent intersecting commercial driveways or cross streets that complicate bicycle lane treatment.
- Overland Park, KS, Olathe, KS, Lenexa, KS, and Shawnee, KS, have adopted a wide curb lane configuration that includes an 11-foot inside lane and a 13-foot wide curb lane rather than two 12-foot lanes.

c. Special Considerations
- Wide curb lanes may be appropriate on retrofit projects where there are physical constraints, and all other options have been pursued, such as removing parking or narrowing travel lanes. This treatment is not particularly attractive to type B/C bicyclists because wide curb lanes simply allow a motor vehicle more room to pass cyclists within a travel lane without any pavement markings.

- Wide curb lanes on arterial roadways improve the cycling environment even though they may not be designated as a bikeway.
- A wide curb lane integrates bicycle and vehicle traffic and forces recognition and awareness on the part of motorists, particularly at intersections.
- Wide curb lanes on urban arterials accommodate bicycle use, but striped and signed bicycle lanes may encourage increased bicycle use.
- Additional width 14 to 15 feet is recommended on steep grades or where drainage grates, raised reflectors or on-street parking reduce the usable width. Widths greater than 16 ft (4.8 m) encourage the undesirable operation of two motor vehicles in one lane. In this situation, a bike lane or shoulder bikeway should be provided.

5302.5 Designating On-Road Bikeways

One of the goals of the MARC Bicycle Element of the Long-Range Transportation Plan is to encourage more people to ride bicycles for short-distance personal, business, social and recreational trips. To realize this increase in use, it may be desirable to provide facilities that act as a "**host**" to bicycling activities. Bicycle routes, bicycle lanes and bicycle paths are recommended for this purpose.

The impact of host facilities is particularly important for casual or infrequent cyclists not adept at riding in traffic. On-street bicycle routes provide information to the bicyclists for the use of secondary streets to connect to on-street bicycle lanes that offer a designated and visible space for bicyclists and can be a significant factor in route choice. Bicycle paths or multi-use trails that are separated from the roadway can serve both transportation and recreation functions and have proven to be significant generators of bicycle use. (See: Appendix B, Quick Reference Guide.)

Due to the nature and frequency of bicycle trips made near college campuses and schools, it is particularly advantageous to provide a designated bikeway system.

1. Bicycle Routes

The signed shared roadway or bicycle route, through appropriate signing, may encompass any of the facility types or general roadway conditions discussed in this report. However, wide curb lane treatments, which are typically implemented on busy arterial routes, are usually not signed as designated bicycle routes. Bicycle lanes are more appropriate for arterial routes within an urban area. Paved shoulders in rural areas may be designated for bicycle use with bicycle route signs.

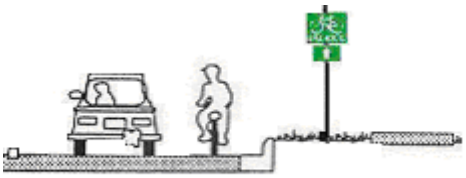

Figure 18. Bicycle Route

a. Facility Purpose
   - To provide directional assistance to bicyclists to a particular destination (e.g. park, school, or commercial district).

- To provide continuity between bicycle lanes, shared use paths or other bicycle facilities.
- To indicate to cyclists that there are particular advantages to using a route as compared with alternative routes.
- Informs motorist of preferred bicyclist's route indicating greater frequency of encounters.

b. Appropriate Applications
- Where signage is desired to guide bicyclists to their destinations.
- In order to provide directional information, a standard sign should be supplemented with arrow plates, names of routes, distances to destinations, etc
- Designated routes may follow a combination of facility types: paved shoulders, wide curb lanes, multi-use trails and general shared roadway conditions that have compatible motor vehicle volumes and speeds.

c. Special Considerations
- Bicycle route signage is not recommended for routine use on major arterials with general shared roadway conditions, or even wide curb lane treatments. The implementation of bicycle lanes, or designation of less traveled alternative routes, are preferred treatments. If no alternative exists, "Share the Road" caution signs may be used until conditions can be improved.
- For reasons of safety and liability, designated bicycle routes should meet national minimum guidelines and hazards to bicycle travel (parallel drainage grates, rough railroad crossings, etc.) should be properly mitigated before they are signed.

d. Retrofit Guidelines for Signing Bicycle Routes

Bicycle routes often comprise the most significant portion of a bikeway system. The bicycle route is selected based on criteria that give the bicyclists a reason to select the preferred route. Bicycle routes may be designated on local streets, with fewer than 2,000 vehicles per day, where traffic speeds are at or below 25 mph or along collector roadways with wide curb lanes (see Appendix C). The MARC Bicycle Element encourages routing bicycle facilities on roadways that do not present potential problems associated with high speed/multi-lane intersections. After bicycle demand corridors are identified, an inventory of roadway characteristics may be used to select specific routes. The inventory might include: traffic volumes, traffic speeds, street width, presence/absence of curbs, availability of parking and parking usage, stop sign presence at each intersection, difficulty crossing major intersections, surface quality, roadway hazards, terrain/topography, connectivity, access, destinations, directness and other relevant observations.

Other approaches to bicycle planning and facility design includes: reducing vehicular speeds or traffic volumes to accommodate bicycles on streets that may not be wide enough for striped bike lanes. Traffic calming treatments may be used to improve safety and increase the attractiveness of a corridor. Many local residential streets are not being considered high bicycle demand corridors and the need to designate them as bikeways is unwarranted, regardless of roadway characteristics. Generally, bicycle routes are not recommended along roadways with high traffic volumes above 2,000 ADT and traffic

speeds above 25 mph without the provision of wide curb lanes or paved shoulders. Bicycle lanes are better suited along these high bicycle demand corridors where traffic volumes and speeds are greater.

2. Bicycle Lanes

Bicycle lanes are designated portions of a roadway, a minimum of 4 feet wide (5 feet preferred) excluding curb and gutter, that are signed, striped and marked for bicycle use. If the bicycle lane is placed between the parking area and travel lane, the minimum width should be 5 feet.

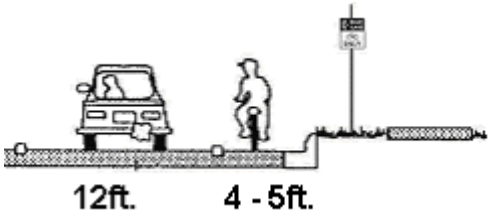

Figure 19. Typical Bicycle Lane

a. Facility Purpose
- To improve conditions for cyclists of all abilities within a given corridor.
- To encourage increased bicycle use on a given roadway by providing a greater degree of comfort and perceived safety for less skilled cyclists.
- Movement by bicyclists and motorists becomes more predictable.
- To establish an overall channeling effect and promote an orderly flow of traffic.

b. Appropriate Applications
- Where significant bicycle demand is expected on arterial and collector roadways. Bike lanes should be considered on collector and arterial roadways where the combination of speed and traffic volume suggests a need.
- On streets where lane designation is not complicated by frequent roadway intersections and commercial driveways.
- On streets with high traffic volumes where cyclists and motorists must frequently pass each other.
- When it is desirable to delineate the right-of-way assigned to cyclists and motorists to provide for movements that are more predictable by each.
- When the route is anticipated to serve a high number of less experienced adult, child and recreational bicyclists.

c. Special Considerations
- While the bicycle lane has been shown to increase overall predictability of traffic flow, the bicycle lane can erroneously increase a cyclist's confidence that motorists will not stray into his path of travel.
- Bicycle lanes must be clearly marked for one-way travel, with designated facilities provided on both sides of a street or roadway.
- Road debris may collect in bike lanes due to the sweeping action of auto and truck traffic. Local agencies should budget for street sweeping to remove debris as needed.
- Special consideration must be given to the treatment of bicycle lanes on roadways with on-street parking.
- Special consideration must be given to the treatment of bicycle lanes at major intersections. Bike lanes tend to complicate left turn movements for bicyclists at

intersections. It is also difficult for bicyclists continuing straight while motor vehicular traffic is turning right.

- Bicycle lanes should be separated from motor vehicle travel lanes with a 6-inch solid white line.
- Sufficient width from the face of the curb should be provided so bicyclists can avoid conflicts with motorists while not having to travel too close to the curb. Most new construction includes a 2-foot curb and gutter section. There is a longitudinal seam that is created where the asphalt surface of the roadway meets the concrete gutter. A minimum 4-foot bicycle lane is recommended from edge of the gutter seam to the bicycle lane strip. Older construction sometimes includes a 1-foot curb and gutter section where the seam has been overlaid up to the face of the curb. In this situation, a 5-foot bicycle lane may be stripped from the edge of curb face to the bicycle lane strip. A 4-foot bicycle lane is not recommended in this instance.

d. Design Treatments Not Recommended

- Two-way bicycle lanes located on one side of a roadway is not generally recommended. (See Figure 20) "Bicycle lanes should be one-way facilities and carry bicycle traffic in the same direction as adjacent motor vehicle traffic. Two-way bicycle lanes on one side of the roadway are not recommended when they result in bicycles riding against the flow of motor vehicle traffic. Wrong-way riding is a major cause of bicycle crashes and violates the rules of the road stated in the Uniform Vehicle Code." AASHTO p. 22.

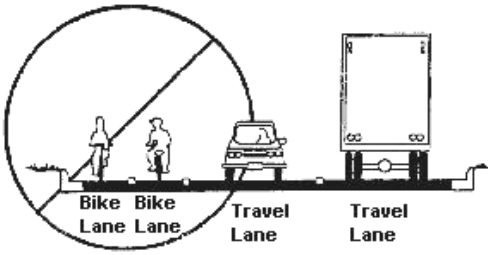

Figure 20. Two-Way Bicycle Lanes

- Bicycle lanes placed between the curb and on-street parking are not generally recommended. (See Figure 21) "Bicycle lanes should always be placed between the parking lane and the motor vehicle lanes. Bicycle lanes should never be placed between the parking lane and the curb lane. This can create obstacles for bicyclists from opening car doors and poor visibility at intersections and driveways, and they prohibit bicyclists from making turns." AASHTO. P. 23.

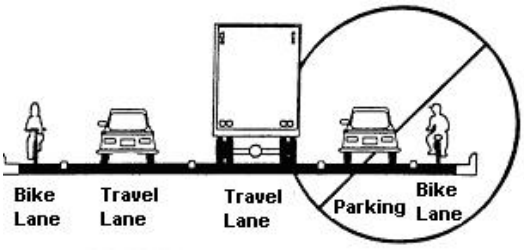

Figure 21. Bicycle Lanes Between Curb & Parking.

- Continuous right-turn lanes increase conflicts for bicyclists with right-turning and left-turning motorists. Eliminate the continuous right-turn lane, consolidate accesses and create well-defined intersections to improve merging. (See Figure 22)

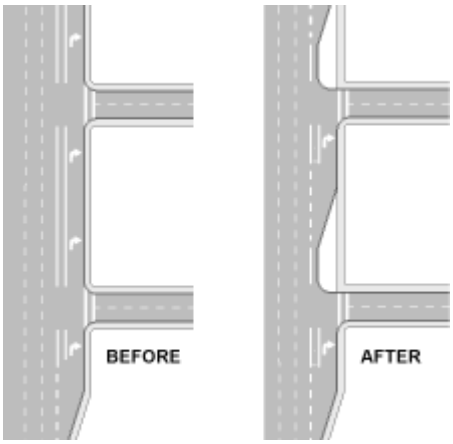

Figure 22. Continuous right turn lanes

e. Retrofit Guidelines for Bicycle Lanes

Because the population densities and land uses that support bicycling are most often found in the built-up areas of the Kansas City region, retrofitting existing streets and roadways is viewed as a necessity to better accommodate bicycles within urbanized areas.

The policy sections of this MARC Bicycle Element address the inclusion of bikeways whenever a road is constructed, reconstructed or relocated; however, existing roadways without bicycle lanes or additional operating width will often act as barriers for bicycle travel throughout the region.

The following guidelines are borrowed from the Oregon Department of Transportation to help determine which portions of a roadway may be modified, and by how much to stay within AASHTO minimums, to accommodate on-street bicycle lanes. These modifications can often be made without significantly affecting the safety or operation of a roadway. A traffic engineer should review each project and in some cases a traffic study will be necessary.

f. Reconsider the need for parking
A roadway's primary function is to move people and goods. It is not to store stationary vehicles. In some cases, parking may only be needed on one side to accommodate residences and/or businesses. Parking can sometimes be narrowed to 7 ft adjacent to a bicycle lane, particularly in areas where traffic calming is being considered.

g. Number of lanes and lane width
In situations where there are four lanes of traffic (two in each direction), and a significant number of left-turn movements, consider the possibility of re-striping for a continuous left-turn lane, two travel lanes and two bicycle lanes.

h. Removal of obstructions
Some older paved or landscaped traffic islands reduce roadway width unnecessarily. If not needed for access control, removal and replacement of raised median islands with

pavement markings can often add several feet of useable width. Relocating utility poles, guardrails and other obstructions away from the edge of the roadway can create additional width.

Summary Generally, the safety of motorists and bicyclists is not compromised with the modifications listed above, as the total pavement width stays the same or is wider. In many cases, safety is enhanced as motor vehicle lanes are offset away from curbs, all travel lanes are better defined, and parking is removed. Adding bicycle lanes often can improve sight distances and increase turning radii at intersections and driveways.

Not all existing roadway conditions will be as simple to retrofit as those listed above. In many instances, unique and creative solutions will have to be found. Width restrictions may only allow for wider curb lanes (13 to 15 feet) to accommodate bicycles and motor vehicles.

It is also important that every effort be made to ensure bikeway continuity. Practices such as directing bicyclists onto sidewalks or other streets should be avoided, as they may introduce unsafe conditions.

i. Bike Lane Retrofits Examples

The built roadway system contains a host of design variations that simply cannot be accounted for in this document. The examples below provide potential solutions to retrofitting selected roadways. As with all design treatments, jurisdictions must evaluate traffic conditions and roadway characteristics on a case-by-case basis. None of the examples below should be implemented until a traffic study verifies the appropriateness of the change.

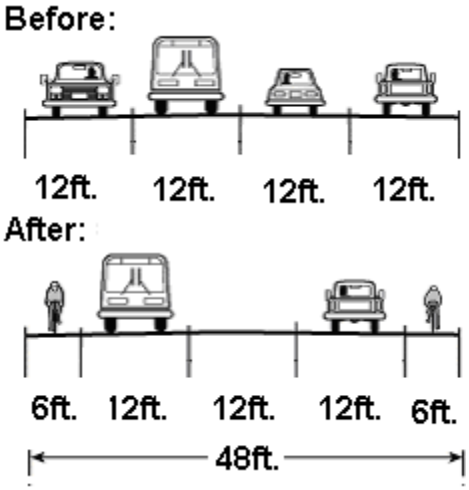

Figure 23. Travel lanes reduced from 4 to 2, with center turn lane

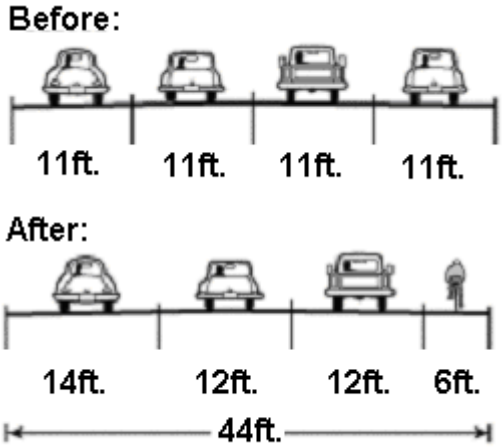

Figure 24. Travel lanes reduced from 4 to 3 on a one-way street

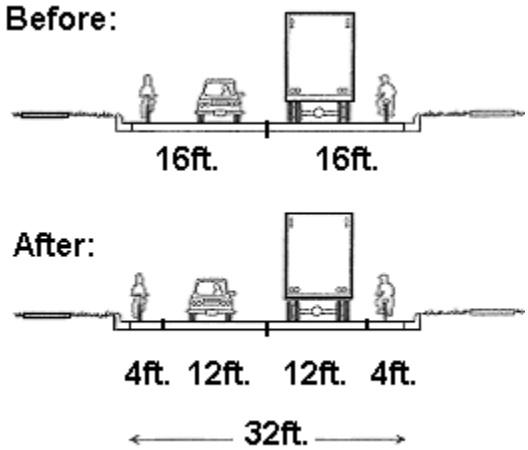

Figure 25. Two-lane collector roadway re-stripped for 12-foot travel lanes and 4-foot bike lanes. Requires 36 ft. with 2-foot curb and gutter sections included.

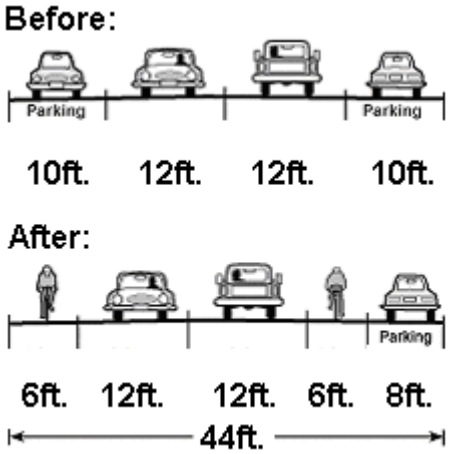

Figure 26 Parking removed on one side of a two way street

5302.6 Providing Designated Off-Road Bicycle Facilities

1. Bike Paths or Shared Use Paths

In transportation planning, off-road bicycle facilities are referred to as bicycle paths. However, any path that is open for public use is likely to be popular with walkers, joggers, in-line skaters, pet owners, wheelchair users and others, as well as bicyclists. Hence the terms shared use path and multi-use trail have become synonymous with bicycle path. By any name, these facilities are typically paved trails a minimum of 10 feet wide that are separated from the roadway system and designed for the exclusive use of bicycles and other non-motorized users. The typical trail cross section in Figure 27 depicts minimum path widths and clearances as set by AASHTO. Shared use paths are facilities on exclusive right-of-way and with minimal cross flow by motor vehicles. AASHTO, p. 33.

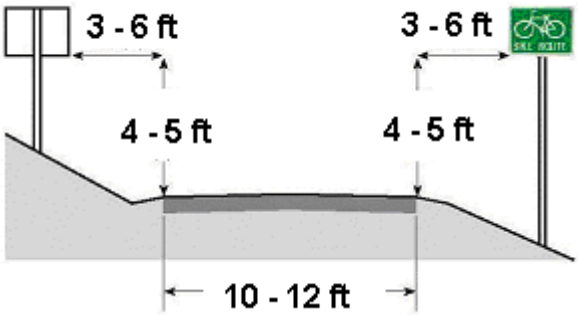

Figure 27. Shared Use Path

a. Facility Purpose

- To serve significant generators of bicycle use, especially for less skilled cyclists.
- To provide enjoyable recreational opportunities as well as desirable commuter routes.
- To provide system continuity and linkage in areas where no on-street facilities are available.

b. Appropriate Applications

- Where uninterrupted right-of-way is available to provide long, continuous routes for commuting or recreation trips.
- Within an independent right-of-way such as an abandoned railroad corridor, linear park, or greenway.
- As cut-through between buildings or connections between cul-de-sacs and other breaks in the street network.
- Within a roadway right-of-way only when there is sufficient space or a physical divider to enforce the concept that the trail functions as an independent highway for bicyclists; and when few streets and driveways intersect with the trail facility.
- It is important to note that bike paths located within a street right-of-way should not be a substitute for bicycle street access. Shared use paths should be thought of as a complementary system of off-road transportation routes for bicyclists that serve as a necessary extension to the roadway network.

c. Special Considerations

- Bicycle paths/multi-use trails attract a variety of user types and therefore need to be designed to accommodate multiple users.
- Recreational trails do not always need to be paved. However, trails should be paved if they are desired to be used for bicycle commuting or transportation trips. Most often, urban and suburban trails are paved to widths of 10 feet or more. Trails in

rural areas may be only 8 feet wide and surfaced with limestone screenings or similar material.

- Bike paths/multi-use trails are, by definition, physically separated from motorized traffic. Ideally, they will be grade-separated with a structure at major roadway crossings, unless the crossing roadway volumes are low, or the separation costs are excessively disproportionate to the need or probable use of the bike path.
- Due to safety considerations, sidewalks and walkways immediately adjacent to a roadway are not recommended for designation as bicycle paths or multi-use trail facilities.
- Separated bike paths/multi-use trails parallel to roadways are generally constructed when other types of bikeways are considered hazardous for bicycle travel, such as along heavily traveled metropolitan freeways, and when there is a commitment to provide bike path continuity for an excessive length of the highway corridor.
- Care must be taken to design appropriate transition areas from separated bike paths to on-street bikeways that may include bicycle lanes, wide curb lanes, paved shoulders or general shared-use roadways.

d. Supplemental Design Details

The AASHTO Guide covers the design of bicycle paths, intersections and structures on pages 33-46. This detailed discussion is supplemental with the Quick Reference Guide on pages 40-43 of this report and the following text that is intended to further assist the appropriate agencies in developing bicycle paths within the greater Kansas City region.

e. Pavement Structure

Minimum sub-base and asphalt thickness are as recommended in a national trails design guide produced by the Rails-to-Trails Conservancy. However, standard application of this cross section is not recommended without further study. Hard, all-weather pavement surfaces are usually preferred by bicyclists over those of crushed aggregate, sand, clay or stabilized earth since these materials provide a much lower level of service and require higher maintenance. State agencies administering federal funding may add requirements to the type of surface provided if the path is intended for commuting purposes.

Each individual bike path must be engineered and designed based upon site-specific sub grade conditions. As a rule, bicycle paths/multi-use trails should be designed to support a minimum design load of 10,000 to 12,500 pounds, which is the weight of a light maintenance truck or ambulance.

f. Trail Widths

Minimum tread widths for bike paths and multi-use trails are generally accepted to be 10 feet. Per AASHTO, an 8-foot width is adequate only where the following conditions prevail:

- Bicycle traffic is expected to be low, even on peak days or during peak hours;
- Pedestrian use of the facility is not expected to be more than occasional
- There will be good horizontal and vertical alignment providing safe and frequent passing opportunities, and

- The path will not be subjected to maintenance vehicle loading conditions that would cause pavement edge damage.

Multi-use trails may need to be even wider to accommodate passing situations for different users traveling at different speeds. Under certain conditions it may be necessary or desirable to increase the width to 12 feet or even 14 feet, due to high traffic, mix of trail users, periodic use by maintenance vehicles, steep grades or poor sight distances.

g. Design Speed

Shared use paths should be designed to accommodate safe travel by the speed of faster bicyclists or in general 20 mph. When a downgrade exceeds 4% or strong prevailing tailwinds exist, 30 mph design speed is advisable. The design speed for unpaved paths is recommended at 15 mph.

The maximum super elevation rate to meet Americans with Disabilities requirements (ADA) is 3 percent, and in general, grades should be kept to a maximum of 5 percent. Where unpaved surfaces are used, the grades should be no more than 3 percent to avoid erosion and other maintenance problems.

h. Restriction of Motor Vehicle Traffic

As discussed in AASHTO, entrances to bicycle paths often need some form of physical barrier to prevent unauthorized motor vehicles from using the facilities.

The first of two alternatives presented in the AASHTO Guide involves installing posts or bollards in the center and at either edge of the trail. A 5-foot spacing is recommended, as this design allows passage by pedestrians and bicyclists but restricts motor vehicle access. Posts should be at least 3-feet high and reflective for nighttime visibility.

The center barrier post may be desired to be a drop-down bollard or removable post that will allow entrance by authorized emergency and maintenance vehicles.

In addition to reflectors or reflective tape on the barrier posts, several state and local agencies have followed California's lead in recommending 4" yellow pavement striping in an envelope around the posts to assure that their location is well marked and visible to bicyclists, day or night.

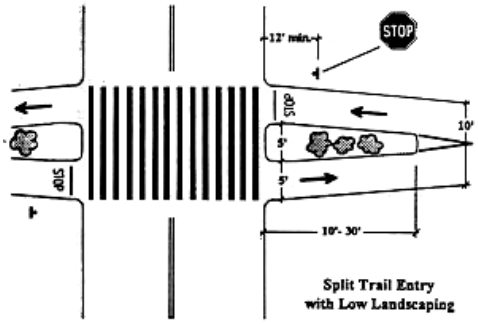

Figure 28. Low Landscape Median Treatment.

An alternative design presented by AASHTO is to split the entry way into two 5-foot paths separated by low landscaping to restrict entry to motor vehicles. The Ohio Department of Transportation has further refined this treatment as depicted in Figure 28. This design is the preferred treatment in high volume areas where heavy trail use may limit a bicyclist's view of the center bollard.

i. A Design Treatment to Use with Caution

"In general, the designated use of a sidewalk (as a signed shared facility) for bicycle travel is unsatisfactory." AASHTO, p.20 AASHTO goes on to state that, when two-way bike paths are located immediately adjacent to a roadway, some operational problems may occur and that other types of bikeways are likely to be better suited to accommodate bicycle traffic along roadways depending on traffic conditions. Paraphrased, AASHTO, p. 33-35 (See Figure 29)

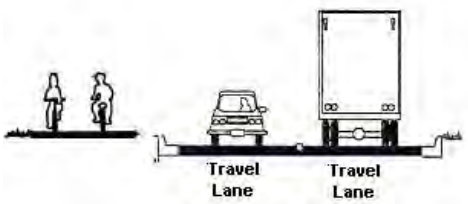

Figure 29. Bike Path Located Adjacent to a Roadway

Problems with paths immediately adjacent to roadways are summarized below and discussed in greater detail in AASHTO p 33-35 & 58:

1). They require one direction of bicycle traffic to ride against the flow of motor vehicle traffic, contrary to normal rules of the road.
2). Bicyclists approaching and leaving the path tend to travel on the wrong side of the street, a major cause of bicycle/motor vehicle crashes.
3). At intersections, motorists often do not notice bicyclists on adjacent paths.
4). Signs posted for roadway users cannot be seen by bicyclists traveling against traffic.
5). When constructed within a narrow road right-of-way, shoulders are often sacrificed, thus decreasing the safety for roadway users.
6). Many bicyclists will use the roadway instead of the shared use path because of convenience or safety.
7). Bicyclists on the path must stop or yield often, while bicyclists on the roadway usually have priority over cross traffic. Bicyclists frequently ignore yield and stop signs.
8). Stopped vehicles exiting side streets or driveways may block the bike path crossing.
9). Barriers are often needed between the path and street, and may create additional obstructions and maintenance problems.
10). Bicyclist flow is complicated at intersections because it is contrary to the normal flow of vehicular traffic; pedestrian flow further complicates this design and creates confusion.

5302.7 Special Design Treatments

AASHTO acknowledges that bicycle lanes tend to complicate both bicycle and motor vehicle turning movements at intersections. This problem is further complicated at major interchanges where the bicyclist is proceeding straight and the motorist is turning right.

The MARC Bicycle Element encourages routing bicycle facilities on roadways that do not present potential problems associated with high speed/multi-lane intersections or cloverleaf freeway interchanges. However, access limitations may necessitate bicycle travel through these areas.

In such circumstances, or any situation where it is difficult for cyclists to traverse the undefined area created by right-lane merge movements, the following supplemental guidance is offered. As with all guidance being provided to the various jurisdictions within the Kansas City region, professional judgment and sound engineering practices must be used on the site-specific application of any design treatment.

A. Innovative Bicycle Lane and Bicycle Route Designs

MARC encourages innovative bicycle design treatments where appropriate. Several design variations have been tried in other metropolitan communities. These innovative solutions may be used to solve a problem in a particular location or overcome particular barriers to bicycling.

1. Contra-flow Bicycle Lanes

The objective of contra-flow bicycle lanes is to increase efficiency and safety by shortening trip distances. Contra-flow bicycle lanes have been used in some locations where there is a strong demand for bicyclists to travel against the normal flow of traffic, or to travel in both directions on a one-way street. (See Figure 30) Contra-flow bicycle lanes are especially applicable for use on one-way streets, in hilly areas or where the alternate route is circuitous or hazardous.

Figure 30. Separated Contra-flow Bicycle Lane. City of Madison, WI

The City of Cambridge, Massachusetts asks the following questions to evaluate potential contra-flow lane locations.

- Is safety improved because of reduced conflicts?
- Can bicyclists safely and conveniently re-enter the traffic stream at either end of the contra-flow section?
- Is the contra-flow bicycle lane short and does it provide direct access to a high-use destination point?
- Are there no or very few intersecting driveways, alleys, or streets on the side of the proposed contra-flow lane?
- Are there a substantial number of cyclists already using the street?
- Is there sufficient street width to accommodate a full-dimension bicycle lane?
- Will the contra-flow bicycle lane provide substantial savings in travel distance compared to the route motor vehicles must follow?
- Are traffic volumes acceptable?

There are multiple examples of contra-flow bicycle lanes that exist around the country. However, the contra-flow lane should be considered in only certain circumstances.

2. Shared Bicycle/Bus Lanes

Shared bicycle/bus lanes provide dedicated lanes for bikes and buses in areas where it is not feasible to have separate lanes for both modes. The lane is painted or paved with colored

asphalt to emphasize the lane designation. The lane should be wide enough to allow cyclists to pass a stopped bus. The right lane is stenciled as a diamond lane, with supporting signage and pavement legends that designate the lane for buses and bicycles only. (See Figure 31)

Figure 31. Bus/Bike lane, City of Philadelphia, PA.

Shared bicycle/bus lanes are commonly used in downtowns where it is difficult to find room for dedicated bicycle lanes. Considerations of shared bicycle/bus lanes include: bicyclists must pass stopped buses on the left whether there is a bicycle lane or not; a dedicated bicycle lane is often unnecessary; provides separation of faster and slower moving traffic; bikes and buses travel at approximately the same average speed and travel time for buses and bikes is improved as they are not hindered by congested auto traffic. Disadvantages of shared bicycle/bus lane include: there is a leap frog effect of buses and bikes; if not designed well, or if turning traffic is allowed use of the lane, benefits of the lane will be reduced. Examples currently include Tucson, AZ.; Madison, WI; Toronto, Ontario; Vancouver, BC; and Philadelphia, PA. These lanes often are used as dedicated right turn lanes. Philadelphia, PA colors this shared lane red to add emphasis.

3. Bicycle Arrow

There are many instances in local jurisdictions along roadways where bicycle lanes are not feasible, parallel bicycle paths are not an option, yet a bikeway would be highly advantageous. The City of San Francisco, CA has begun to use pavement treatments to designate bicycle routes. They have applied bicycle arrows along bicycle routes where roadway users share limited space. (See Figure 32)

This design treatment may be used on roadways with less than a 14-foot wide travel lane in certain circumstances. However, the best application of the bicycle arrow is on roadways with wide curb lanes. Reasons for the bicycle arrow include: reminding motorists that they are traveling on a designated bicycle route, orientation of cyclist to ride with traffic on the proper side of the road, proper placement to encourage cyclist to travel outside the door zone of parked vehicles, and motorists are shown where on the road to expect cyclists' path of travel. The bicycle arrow does not create a separated dedicated lane; however, like the bicycle lane, the arrow is a pavement treatment that helps to improve traffic flow.

The use of this pavement logo in conjunction with "Share the Road" signs or bicycle route signs can reinforce that cyclists belong on the road and increase driver awareness of bicyclists.

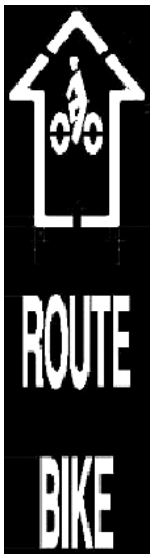

Figure 32. Bicycle Arrow. City of Denver, CO Design

The pavement marking should be installed with its centerline 12 feet from the face of the curb where parking is permitted. (See Figure 33) For curb lanes without parking or room for standard bicycle lanes, the pavement logo should be placed with the logo's centerline at least

3 feet from the edge of the ride able surface (i.e., the curb face or the seam where an asphalt road surface meets a concrete gutter).

Figure 33. Bicycle Arrow.
City of Denver, CO.

The San Francisco Department of Parking and Traffic (DPT) recommends installing the pavement marking at the beginning and near the mid-block of a bike route. A logo should be painted every 100-200 feet. At the beginning of the block, the logo should be painted 10 feet past the edge of the crosswalk (or where the crosswalk would be painted). The mid-block logo should be painted 100 feet before the next intersection's crosswalk. If the block is less than 150 feet long, at least one logo should be used (placed at 10 feet past the crosswalk edge). If the block is more than 350 feet long, another logo should be painted halfway in between the two logos described above. For long blocks, logos should be spaced no more than 200 feet from each other. For example, if a city block is 400 feet, logos should be painted at 10 feet past the crosswalk, 145 feet beyond that first logo and then another 145 feet beyond that. These guidelines should be viewed as suggestions and are flexible according to existing road conditions and local demands.

B. Innovative Intersection Design Treatments

1. Bike Slots

The Missouri Department of Transportation, District IV is currently using an intersection treatment they call a bike slot. The bike slot is an intersection treatment that was developed from Figure 11 of the AASHTO's Guide for the Development of Bicycle Facilities. AASHTO presents optional treatments for pavement parking where a bike lane approaches a major intersection. However, the bike slot is an option even though bike lanes may not be present. The absence of a bike lane does not preclude the need to accommodate the bicyclists especially at intersections. The bike slot intersection treatment is beneficial where there are conflicts between through cyclists and right turning vehicles. Cyclists who stay to the far right following the curb along a right turn lane and then either continuing across the intersection or swerving to the left across the right turn lane at the intersection put them in danger. (See Figure 34)

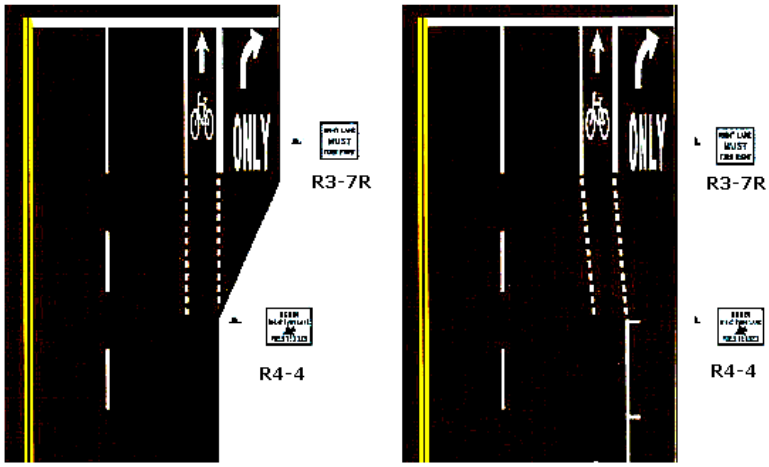

Figure 34. Bike Slots, dashed approaches optional.

2. Left Turn Only Bicycle Lane

Left hand turns are often a difficult maneuver for the bicyclists. Some cities have developed **left turn bicycle lanes** to increase safety and make the left hand turn easier. (See Figure 35) This treatment is especially useful where a signed bicycle route may jog a short distance to another through street.

Figure 35. Left Turn Bicycle Lanes
City of Portland, OR.

3. Painted Bicycle Lane

AASHTO recommends that the dashed bicycle lane stripping be continued throughout the right turn merge lane. As an added safety measure the City of Portland, Oregon installs a blue bicycle lane treatment through the transition area of a right turn lane and a bicycle lane. Appropriate MUTCD signing is also needed in these transition areas to establish right-of-way.

Figure 36.
Colored Bicycle Lane
City of Portland, OR

Figure 36, shows a bicycle lane that has been painted solid through a right turn merge. This innovative design has decreased motorist and bicyclist conflicts by giving

right-of-way to the bicyclists. As bicycle lanes become more common in the Kansas City area, similar lane treatments may be called for.

4. Advance Bicycle Boxes

The objectives of the advance bicycle box are to improve the visibility of cyclists at intersections and to enable them to correctly position themselves for turning movements during the red signal phase by allowing them to proceed to the front of the queue. (See Figure 37)

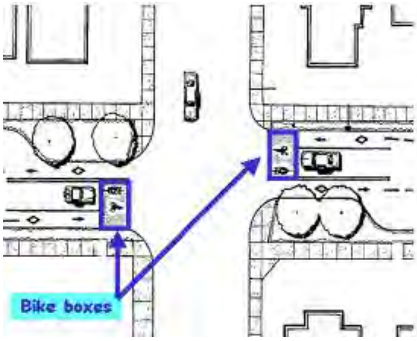

Figure 37. Advance Bicycle Boxes. City of Portland, OR Design

A bicycle lane leading up to a bicycle "reservoir" is located between the motor vehicle stop line and the crosswalk. The bicycle box should be 12 to 14 feet deep. If it is shallower, bicyclists tend to feel intimidated by the motor vehicles, and if it is deeper, motorists tend to encroach. To increase its effectiveness, a bicycle stencil should be placed in the bicycle box and a contrasting surface color is strongly recommended for the reservoir and the approach bicycle lane. Instructional signs and separate cyclist signal heads can be installed in conjunction with the bicycle box. This treatment may be used at intersections with high motor vehicle and bicycle ADTs, frequent turning conflicts, and intersections with a high percentage of turning movements by both cyclists and motorists. According to the Department of Environment, Transport, and Regions of Great Britain (DETR) Traffic Advisory Leaflet 8/93, "Advance Stop Lines (ASL)s have been used successfully at sites with motor vehicle flows up to 1000 vehicles per hour, and with two lane approaches.

5. Mid-block Bicycle Crossing

Figure 38. Mid-block Crossing City of Lawrence, KS

The objective of a mid-block crossing is to make an off-street bicycle path crossing safer and more visible. Various traffic-calming devices exist such as refuge islands and speed tables, which may be appropriately used at mid-block bicycle crossings. This application is appropriate at the mid-block intersection for an off-street bikeway with a street. This crossing is suitable for streets with faster moving traffic. Various mid-block crossing designs exist. A typical design may include two four-foot long sections of wide diagonal stripes separated by an eight-foot clear section. Reflective pavement markers are installed on the near side of the crossing in front of each diagonal strip. A bicycle logo and "XING" pavement legend are installed prior to the crossing, at a distance dependent on the roadway design speed along with a bicycle warning sign (W79). The bikeway traffic is controlled with "STOP" signs. (See Figure 38)

6. Bicycle Medians

It is possible to modify the operation of a local street to function as a through street for bicycles while restricting local access for automobiles. Bicycle medians may be installed on selected bicycle routes to limit conflicts between motorists and bicyclists and give priority to through bicycle movement. (See Figure 39)

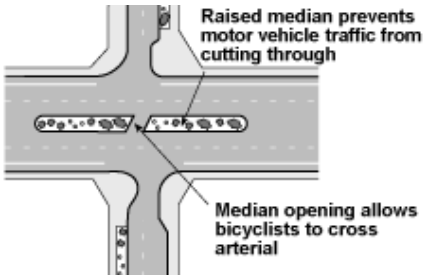

Figure 39. Bicycle Medians, ODOT Design

7. Bicycle Signals

The objective of providing bicycle signalization is to separate conflicting movements and facilitate the flow of all types of traffic.

The city of Davis, California first considered using bicycle signals, which later became standard in California. There are three types of intersections where they are used: Type A, at tee intersections with high bicycle traffic along the top of the tee; Type B, at the confluence of an off-street bicycle path with an intersection; and Type C, where separated bicycle paths run parallel to arterial streets.

Figure 40. Bicycle Signal City of Davis, CA.

The city of Davis programs signal phasing provides for a minimum bicycle green time of 12 seconds and a maximum green time of 25 seconds. Additionally, a two-second all red interval is provided at the end of this phase as opposed to only one second at the end of other phases. Pedestrian cycle times are five seconds of walk and 18 seconds of pedestrian clearance. Other treatments included with the installation of the bicycle signal heads include advance-signing warning (BICYCLE SIGNAL AHEAD). The phasing plan prohibits motorists from conflicting with bicycle and pedestrian traffic during the bike phase. (City of Davis Public Works Department) (See Figure 40)

8. Modern Roundabouts

The modern roundabout offers safety benefits for motorists, bicyclists, and pedestrians over conventional four way intersections.

- A modern roundabout has only 8 vehicle-to-vehicle conflict points and only 8 vehicle-to-pedestrian conflict points. The conventional intersection has 32 vehicle-to-vehicle conflict points and 24 vehicle-to-pedestrian conflict points.

- If designed properly, the horizontal deflection of a modern roundabout can constrain speeds from 10 to 20 mph depending on design. As a result, bicyclists are able to match the speed of traffic.

- The modern roundabout simplifies transitions between bikeway types, bicycle paths, bicycle lanes and bicycle routes.

- The modern roundabout eliminates all left turn movements at an intersection by channeling traffic in a counter-clockwise direction. This vastly simplifies turning conflicts for bicyclists.

Note: Visually impaired pedestrians have difficulty at roundabouts in determining appropriate times to begin crossing, and also may have difficulty locating crosswalks, aligning to cross the street, and maintaining their heading while crossing.

5302.8 Bikeway Signing and Marking

The use of appropriate signs and pavement markings will improve the safety and general public acceptance of bicycles on public roadways in the Kansas City region. Consult the Manual of Uniform Traffic Control Devices (MUTCD) for the latest and most complete set of specifications for bicycle related signs and markings. According to the MUTCD, bicyclist traffic control devices must adhere to the following five basic requirements to perform their intended function:

1. Fulfill a need.
2. Command attention.
3. Convey a clear, simple meaning.
4. Command respect of road users.
5. Give adequate time for proper response.

The local design, placement, operation, maintenance and uniformity of bicycle traffic control devices must be consistent with MUTCD recommended standards. Uniformity of design includes shape, color, symbols, wording, lettering, reflectorization and sizes.

The following recommendations are based on input from local government agencies in the Kansas City metro area that expressed a desire for a consistent system of bicycle facility signing, recognizing that individual communities would customize signs to meet their needs.

1. Local Bicycle Routes

According to the MUTCD, a Bicycle Route Sign (D11-1) picture in Figure 41 is intended for use where no unique designation of routes is desired. This 24” x 18” sign, green with white lettering, should be placed at intervals frequent enough to keep bicyclists informed of changes in route direction and to remind motorists of the presence of bicyclists.

Figure 41. Bicycle Route Sign & Route Markers

Within the Kansas City region, the standard Bicycle Route Sign is recommended for use within local communities to identify local bicycle routes. To provide navigational information, supplemental plaques should be used with Bicycle Route Signs to convey the following information:

- Destination of the route
- Distance to the desired destination
- Direction of travel

As desired or deemed appropriate, supplemental plaques may also be placed above or below the D11-1 for the following purposes:

- To clarify which community a bicycle route serves
- To identify a specific route by local name

2. Regional Bikeways

The region should be served by an interconnected system of bikeways. Recent planning activities such as the City of Kansas City, Missouri Transportation Bicycle Initiative, the Riverfront Heritage Trail, Northland Trails Plan and the update of MetroGreen are aimed at developing an on-road and off-road bikeway system.

Figure 42. Sample MetroGreen Sign

The MUTCD recommends a Bicycle Route Marker (M1-9) for use where it is desired to establish a unique identification through route designation of a state, regional or local bicycle route. As presented within the MUTCD, the marker should have a numerical designation within a green background on a reflectorized white legend or border. However, due to the multiplicity of jurisdictions responsible for bikeway implementation within the Kansas City metro area, it would be difficult to coordinate a logical and meaningful numbering system across the region that could evolve and expand with new opportunities for bicycle facility construction. For this reason, and because the MUTCD allows for variance in sign design where messages other than those provided in the MUTCD are needed, the following regional signage system is proposed.

"MetroGreen" route markers (see Figure 42) are appropriate for use in the following situations:

- Multi-jurisdictional routes that connect one or more communities
- Multi-jurisdictional routes between counties or states
- Segments of the MetroGreen system

3. Regulatory and Warning Signs

While some of the guide signs discussed above are variations of standard sign treatments, national recommendations for the use of regulatory and warning signs should be followed as established in MUTCD. Regulatory signs give notice of traffic laws or regulations that bicyclists and motorists must follow. Examples include signs for bicycle lane designation (see Figure 38), no parking signs, stop signs and yield signs.

R3-17
Figure 43.

Warning signs call attention to conditions on, or adjacent to, a bikeway that is potentially hazardous to users. The use of warning signs, which are typically yellow in color, should be kept to a minimum to maximize their effectiveness.

One warning sign now being used is the "Share the Road" sign. This sub plate (W16-1), when combined with the standard W11-1 warning sign is intended to increase bicyclists' visibility. As a warning sign, "Share the Road" signs alert motorist of the presence of bicycle traffic. This sign is not intended to designate a bike route. They are typically used on roadways where bicycle traffic is common. The sign is also intended to remind bicyclist to ride in a manner that does not impede motorized traffic. Its intention is not to encourage inexperienced bicyclists to ride on the roadway as a preferred route. This sign is especially useful in cities and towns where there are large numbers of bicyclists riding on streets that may be unsuitable for designation as preferred bicycle routes due to factors such as narrow lanes, high-speed motor vehicle traffic or high traffic volumes.

Figure 44.

5302.9 Bicycle Parking

Bicycle parking is recognized as part of the vital support infrastructure needed to make the bicycle a viable transportation choice. This section discusses the need for bicycle parking accommodations not only as it relates to destinations but also as it relates to the use of public transportation. Responsibility of the implementation of bicycle parking improvements is the responsibility of both government and private enterprise. The Mid-America Regional Council encourages local jurisdictions to consider adopting bicycle ordinances to address new development.

In recent years, the public transit providers have begun adding bicycle racks on buses so that riders can use a bicycle to reach their final destination. As access to various destinations improves and cycling is encouraged, bicycle parking becomes an ever-larger component.

Bicycle parking needs vary by type and duration of use and location. There are many useful types of facilities on the market, which all fall generally into three categories (discussed below). Several factors are common to all acceptable bicycle-parking installations.

- Good support of the bicycle
- Security - capacity to lock the frame and both wheels
- Ease of use
- Durability
- Visibility of site
- Convenience to destination
- Compatibility with site conditions
- Attractiveness

Several designs cannot be recommended for most public locations. These include racks that are very low to the ground, which do not support the bicycle, are difficult to attach a locking device to, and pose a potential hazard to pedestrians' tripping. Other questionable designs include the traditional "school rack" and variations on it. These racks generally only support the front wheel - allowing bicycles to fall over and requiring a longer chain or cable to secure all components of the bicycle. There are also racks on the market that do not accommodate all types of bicycles - the fatter wheels of "mountain bikes" do not fit in some designs.

A. Class I Bicycle Parking

Class I parking provides high security, long term parking that offers complete protection from theft, vandalism and weather. Bicycle lockers or attended covered parking are examples. (See Figure 45) Bicycle lockers are generally rectangular enclosures, each holding one or two bicycles. Materials currently in use for locker construction include particleboard, fiberglass, galvanized steel, and stainless steel. Fiberglass and steel are the most durable. Frame and hardware construction should be durable and designed appropriately for the weather conditions of the Kansas City region.

Bicycle lockers provide the highest level of security for bicycles and are appropriate for use where daylong or longer storage is needed on a regular basis. Bicycle lockers are generally rented and/or reserved in advance for a period, varying from one month to one year. Therefore, some program of maintenance must also be implemented. This class requires the most land area of any bicycle parking facility.

Figure 45. Class I Bicycle Parking

B. Class II Bicycle Parking

Figure 46. Class II Bicycle Parking

Class II parking provides medium security parking that protects against theft but not against weather or vandalism. Both wheels and the frame are secured to the rack or post with a simple user supplied lock, but without the need for cables or chains supplied by the user. (See Figure 46) Several companies market bicycle-parking racks that allow all three major components of the bicycle - back wheel, front wheel, and frame - to be locked, without the removal of the front wheel. The users must usually only supply an appropriate lock, usually a padlock or U-lock. These racks usually have either attached cables or moving parts that enclose the bicycle parts. They generally are designed to provide stable support for the bicycle. The proper use of these devices is not always immediately apparent, so their installation is best reserved where repeat and longer-term use is anticipated.

These facilities provide a very high level of security for the bicycle, although accessories and some components are still vulnerable to theft. They are a good choice at places of employment, schools, transit access points, and other places where bicycles will be left for several hours with minimum supervision.

C. Class III Bicycle Parking

Class III parking provides minimum-security "bicycle racks" or fixed objects that protect against theft but only in conjunction with a user-supplied cable, chain and lock. Racks are more likely to cause damage to bikes due to crowding. Many varieties of stands and racks fall into the Class III category of bicycle parking. Many types of hitching posts, rails, inverted "U's," and "ribbon" racks are commercially offered. To save money, some municipalities and private employers have designed and constructed or had locally fabricated variations on these products. The popular "ribbon" rack is used extensively for its attractiveness and ease of installation. Common properties of Class III facilities include its support of the bicycle with or without the front wheel removed, its attractiveness, and post or pipe dimensions which will allow use of a U-lock.

Figure 47. Class III Bicycle Parking.

These facilities are recommended for short-term parking, although in combination with other amenities (such as shelter from the weather) they can be adequate for long-term storage. The various posts and inverted U designs have the advantage of maximum sitting flexibility. They can be grouped or provided for one or two bicycles, as necessary.

D. Short-Term vs. Long-Term Bicycle Parking

Short-term bicycle parking is provided for shoppers, customers, messengers and other visitors who generally park for two hours or less. Class II or III facilities are appropriate in this case. A good rule of thumb is that short-term parking should be located within 50 feet of a main entrance of the destination. It is a good idea to distribute short-term parking where there is more than one building on a site, or where a building has more than one main entrance; the parking must be distributed to serve all buildings or main entrances.

Figure 48. Short-term Parking.

Figure 49. Long-term Parking.

Long-term bicycle parking is provided for employees, students, residents, commuters and others who generally stay at a site for several hours. This parking is typically more secure and weather-protected than short-term parking. Class I or II bicycle parking facilities are most appropriate for long-term parking.

1. Bicycle Parking Location

The location of bicycle parking should be determined first. This location should meet the needs of potential users. Lack of adequate bicycle parking facilities and fear of theft are major deterrents for all bicyclists. The visibility of parking and ability of the rack to secure the bike are two important considerations.

Bicycle parking should be sited wherever bicycle traffic is expected, in convenient locations. High priority locations include recreational destinations, schools and universities, places of employment, and commercial/retail centers. Consideration may be given to the conversion of auto parking spaces to the bicycle, since six to eight bicycles may be parked in the same space as one car. During installation, it is important to understand how the rack or facility will be used so as not to block access or face the facility in the wrong direction.

2. Additional Considerations

There are several additional features of bicycle parking improvements that can increase their attractiveness to users. Weather protection (roof or canopy) can greatly enhance any Class II or III facility, which will be used for commuting or other long-term uses. Placing facilities in high traffic areas or where they are visible to an attendant will improve security.

5302.10 Appendix A: Key Reference Documents

The Quick Reference List is intended to be used in conjunction with the prevailing guidelines and standards for bicycle facility design, as found within the following publications.

AASHTO	The 1999 AASHTO Guide for the Development of Bicycle Facilities. These national guidelines and minimum design criteria have been published to provide information on the development of new facilities to enhance and encourage safe bicycle travel. Like most states, Kansas and Missouri Departments of Transportation use the guide as the state standards for bicycle facility development. The 1999 Guide is available for $30 from the American Association of State Highway and Transportation Officials (AASHTO), 444 N. Capitol Street, N.W. Suite 249, Washington, D.C. 20001. 202/624-5800. www.traportation.org
ITE	"Innovative Bicycle Treatments" 2001Draft Report. This report has assembled in a single document the various innovative bicycle design treatments currently in use by local agencies in the U.S., Canada, Europe, New Zealand and Australia. A description, picture cost estimate, and evaluation study, if available, are provided for each treatment. Examples of over 50 treatments are summarized in this report. These treatments include: contra-flow bicycle lanes, traffic calming accommodations for bicycles, innovative bicycle traffic control such as bicycle signal heads, various innovative bicycle signs, bicycle detection and counters, and innovative bicycle parking designs/plans. This report simply presents the design treatments and research on the specific treatments to the extent that research is available. It does not endorse or support any of the designs, but simply presents the state of the practice for innovations to promote information sharing on the use of such innovations. Several innovations were included from this report. This report is available on the ITE website at www.ite.org.
MUTCD	Manual on Uniform Traffic Control Devices. The Federal Highway Administration, U.S. Department of Transportation manual contains unified national standards for signs, signals, markings, and devices on all streets and highways open to public travel. The *MUTCD 2000* has been entirely rewritten and reformatted to improve the overall organization and discussion of the content. Part 9: "Traffic Controls for Bicycle Facilities" establishes national recommendations for signing and marking both on-road and off-road bicycle facilities. Part 9 is available for $22 from the Institute of Transportation Engineers, 1099 14th Street, NW, Suite 300 West, Washington, DC 20005-3438 USA Fax: +1 202-289-7722. To order on-line go to the Institute of Transportation Engineers website at www.ite.org.
FHWA	Selecting Roadway Design Treatments to Accommodate Bicycles. This manual was prepared by the Federal Highway Administration in 1994 to assist transportation planners and engineers in selecting roadway design treatments to accommodate bicycles. It offers guidelines on the desirable width for various types of design treatments based on the anticipated type of bicycle users and various combinations of traffic operational factors. Document #FHWA-RD-92-073 is available via the U.S. Department of Transportation Bureau of Transportation Statistics internet web site at www.bts.gov
UNC-HSRC	Bicycle Facility Selection, A Comparison of Approaches This report was prepared by Michael King for the Pedestrian and Bicycle Information Center, Highway and Safety Research Center, of University of North Carolina. The report provides a comparison of more than 20 national, state and local bicycle facility manuals.

5302.11 Appendix B: Quick Reference Guide

The following quick reference guide has been assembled to assist local professionals in planning and designing bicycle facilities in the Kansas City region

The listing is intended to serve as a convenient reference point for applicable standards and guidelines pertaining to various elements of bicycle projects. The list contains both references to this document and external documents listed in Appendix A. For comprehensive guidance and specific interpretation, the user is referred to detailed discussions located within the other publications, as identified below**.**

Table 1. Quick Reference Guide

Item	**Notes**	**Source**	**Page**
Drainage Grates	Do not use a parallel-bar grate	AASHTO	p. 18
	Pavement markings for obstructions	THIS DOCUMENT	p. 5,6
		MUTCD	p.9C-7
Railroad Crossings			
Crossing angle	ideally, cross at 90 degree angle	AASHTO	p. 60
	Widen travel way if <45 degree angle	THIS DOCUMENT	p. 6
Warning signs	115 feet min. before crossing	MUTCD	p.9B.18
Pavement markings	65 feet min. before crossing	MUTCD	p. 9B.18
Traffic Control Devices			
Bicycle detectors	diagonal quadruple loops		
	For shared use roadways;		
	Quadruple loops for bicycle lanes	THIS DOCUMENT	p.7
	Video Camera	THIS DOCUMENT	p.7
	RTMS	THIS DOCUMENT	p.8
	Push Button	THIS DOCUMENT	p.9
Clearance interval	Bicycle speed of 10 mph with	AASHTO	p. 64
	3.0 – 6.0 sec. clearance time		
Signage			
Lateral placement	3 feet min./6 feet max.	MUTCD	p.9B-1
Height	4 feet min/5 feet max	MUTCD	p.9B-1
Maintenance Practices			
Bikeway standards	Same or greater maintenance	AASHTO	p. 73
	standard than vehicular travel way		
	Adequate maintenance	THIS DOCUMENT	p.10
Paved Shoulders			
General	purpose/application	THIS DOCUMENT	p. 11-13
	Roadway cross sections	THIS DOCUMENT	p. 46
Shoulder Width			
At 35 mph	4 feet min.	AASHTO	p.16
At speeds >35 mph	> 4 feet		
At speeds >50 mph	5’ and 5’ with guardrail or other		
	Roadside barrier		
As dependent on vehicular	volumes and speeds	FHWA	p. 16-21
Wide Curb Lanes			
General	purpose/application	THIS DOCUMENT	p. 15,16
	Roadway cross sections	THIS DOCUMENT	p. 46

Right-Hand Lane Width	13-14 feet.	AASHTO	p. 17
	15 feet preferred for steep grades,		
	on-street parking, or hazards such		
	as drainage grates or raised reflectors	THIS DOCUMENT	p.15,16
	As dependent on vehicular		
	Volumes and speeds	FHWA	p. 16-21
Bicycle Lanes			
General	purpose/application	THIS DOCUMENT	p. 18
	Roadway cross sections	THIS DOCUMENT	p. 46
Bicycle Lane Widths			
Ideal conditions	5 feet ideal, 4 feet min.		
Next to curb	5 feet min.		
Next to parking lane	5 feet min.		
Combined bicycle/parking	12 feet min.	AASHTO	p. 22
	As dependent on vehicular		
	Volumes and speeds	FHWA	p. 16-21
Lane Placements	6” solid white line to separate		
	motor vehicles from travel lane	AASHTO	p. 23
Intersections			
Pavement markings		AASHTO	p. 25
		MUTCD	p.9C-2
Designated Bicycle Routes			
General	Purpose/application	THIS DOCUMENT	p. 16,17
Signage			
General signing	“Bicycle Route” Signs	MUTCD	p.9B.17
		MUTCD	p.9B.18
MetroGreen system id.	use of logo, supplemental plates		
	and directional maps	THIS DOCUMENT	p. 35
	Share the Road	THIS DOCUMENT	p. 36
Shared Use Paths			
General	Purpose/application	THIS DOCUMENT	p. 23
Path Widths			
Typical	10 feet min.	AASHTO	p. 35
With heavy multi-use	12 feet min	THIS DOCUMENT	p. 23
Clearances			
Graded shoulder area	2 feet min.	AASHTO	p. 36
From trees, poles, etc.	3 feet min	AASHTO	p. 36
Vertical clearance	8 feet min./10 feet desired	AASHTO	p. 36
Grades			
Longitudinal	5% max. desired	AASHTO	p. 27
Cross slope	2% min.	AASHTO	p. 39
Design Speed			
General	20 mph min	AASHTO	p. 36
If grade is > 4%	30 mph	AASHTO	p. 36
Curves			
Radius	225 foot min. at 30 mph	AASHTO	p. 37-38
Super elevation	2% superelevation and 20 degree lean	AASHTO	p. 37-38
Stopping/Sight Distances	are grade and speed dependent	AASHTO	p. 40

	125 feet min		
Pavement Structure	must be determined based on	AASHTO	p. 54
	site conditions		
	Hard all-weather surface preferred	THIS DOCUMENT	p. 24
Lighting	5 – 22 lux avg	AASHTO	p. 57
	Horizontal illumination levels		
Structures			
Clear width, minimum	same as approach width	AASHTO	p. 55
Clear width desired	approach width + 2 feet each side		
Vertical clearance	10 feet min.	AASHTO	p. 55
Railings	3.5 feet high, min. of 42’ high	AASHTO	p. 55
Smooth rub rails	attach at height of 3.5 feet		
Loadings	10,000 – 12,500 lbs.	THIS DOCUMENT	p. 24
Intersections			
Crosswalk markings	use diagonal or longitudinal		
	Lines for added visibility	MUTCD	p. 3B-23
Signalized crossings			
Min. pedestrian volume	100+ per 4-hour period or		
	190+ per 1-hour period	MUTCD	p. 4C-4
Vehicular warning signs			
Bicycle Xing signs, rural	750’ before crossing		
Bicycle Xing signs, urban	250’ before crossing	MUTCD	p. 9B-11
Limited vehicular access			
Entrance bollards	5 feet min. between posts	AASHTO	p. 57
Split path	5 foot min. path width	THIS DOCUMENT	p. 25
With gravel drives	add 10’ paved apron	AASHTO	p. 33
Path Pavement Markings			
Center striping	4” yellow line, as needed	AASHTO	p. 53
Gap ratio	3’ line with 9’ gap	MUTCD	p. 9C-1
User separation striping	4” white line		
Symbols/word messages	as per MUTCD guidelines	MUTCD	p.9C-4
Path Signage			
Lateral placement	3’ min. – 6’ min		
Height	4’ min.	MUTCD	p.9B-1
Longitudinal placement			
Regulatory signs	where regulation applies	MUTCD	p.9B-8
Hazard warning signs	no less than 50’ min. before hazard	MUTCD	p.9B-15
RR Xing signs	315’ min. before RR Xing	MUTCD	p.9C-4
MetroGreen system identification	use of logo supplemental plates	THIS DOCUMENT	p. 35

5302.12Appendix C: Bicycle Facility Selection Guide

Many jurisdictions in our region are making efforts to accommodate bicyclist within roadways. Technical information on the design of different facilities has dramatically improved in recent years. However, traffic engineers continue to debate the most appropriate choice of treatment to accommodate bicyclists in any given set of circumstances. Most traffic engineers would agree that guidance in selecting the appropriate treatment is needed.

Recently, a report was issued for the Pedestrian and Bicycle Information Center, Highway and Safety Research Center of the University of North Carolina, titled "Bicycle Facility Selection: A Comparison of Approaches". The authors of this research provided a comparison of approaches from more than 20 national, state and local manuals developed to provide guidance in this area. The following table was developed based on a comparison of the North America examples and those examples, which most closely matched our mid-west regional context. Keep in mind that the speed and volume matrix is not a standard but rather general guidelines. Moreover, the guidance is not intended to supplant engineering judgment.

Table 2. Regional Speed-Volume Matrix

	20 mph and less	***25 mph***	***30 mph***	***35 mph***	***40 mph***	***45 mph and over***
Standard Lane	<2,000	<2,000	<2,000	<2,000	<1,000	-----
Wide Curb Lane	2,000-10,000	2,000-9,000	2,000-8,000	2,000-7,000	2,000-6,000	<1,000
Bike Lane or Paved Shoulder	>10,000	>2,000	>2,000	>2,000	>1,000	>1,000
Shared Use Path	anytime	anytime	anytime	anytime	anytime	anytime

Note: ADTs are based on roadway traffic counts.

The next table is intended to provide guidance in general to the local jurisdiction when selecting the appropriate design treatment for designated bikeways including new roadway construction or reconstruction. The roadway classification system is based upon FHWA definitions; your local jurisdiction will likely have its own classifications.

Table 3. Bicycle Facility Treatment & Roadway Functional Classification

	Paved Shoulder	Bicycle Lane	Wide Curb Lane	Standard Lane	Shared Use Path
Interstate	PS*	NP	NP	NP	PS
Urban Expressway	PS*	NP	NP	NP	PS
Principle Arterial	PS	PS	PS	NR	PS
Urban Principle Arterial	PS	PS	PS	NR	PS
Minor Arterial	PS	PS	PS	NR	PS
Urban Minor Arterial	PS	PS	PS	NR	PS
Collector	PS	PS	PS	NR	PS
Local	PS	PS	PS	PS	PS

KEY: NP = Not Permitted NR = Not Recommended PS = Possible Solution

NOTE: An asterisk (*) indicates that this solution may be considered when all other reasonable alternatives treatments are not practical and routing is necessary to provide continuity of bicycle routes. An example of this would be major river bridges (such as the Heart of America Bridge over the Missouri River).

5302.13Appendix D: Bikeway Facility Cross-Section

The Kansas City Metropolitan Chapter of the American Public Works Association has developed a series of “Street Section Details” to accommodate bicycle vehicular traffic. Where bicycles are expected or along corridors that that a local jurisdiction has identified in a planned bikeway network the following street sections are recommended at a minimum.

SEE Street_sections.pdf

5302.14 Appendix E: Miscellaneous Local Examples

City of Olathe, KS
North Gate Road
Asphalt Wide Curb Lane
13 foot with cationary
"Share the Road" sign.

City of Shawnee, KS
Blackfish Parkway Trail
Class I Multi Use Path
10 foot.

City of Olathe, KS
Dennis Ave.
Asphalt Bike Lane 4 foot.

City of Shawnee, KS
Midland Dr.
Bike Lane 6 feet.

City of Leawood, KS
127th St.
Asphalt Bike Lane 4 foot.

City of Olathe, KS
143rd St.
Bike Lane 6 feet.

City of Kansas City, MO
River Heritage Trail
Concrete Class I Multi
Use Path 12 foot.

City of Kansas City, MO
Indian Creek Trail
103rd St. underpass for
concrete Class I Multi
Use Path 10 foot.

City of Blue Springs, MO
Adam's Dairy Parkway &
1-70 Interchange.
Box culvert, Asphalt Path
Class I Multi Use Path 10
foot.

City of Kansas City, MO
Indian Creek Trail
Concrete Class I Multi
Use Path 10 foot with
center strip.

City of Kansas City, MO
Trolley Track Trail
Crushed Limestone Class
I Multi Use Path 8 foot.

City of Olathe, KS
Indian Creek Trail
Mur-Len Rd. box culvert
underpass Class I Multi
Use Path 10 foot.

Jackson County, MO
Little Blue Trace Trail
Crushed Limestone Class
I Multi Use Path 8 foot.

City of Lenexa, KS
Mill Creek Trail
Rail road tunnel Class I
Multi Use Path 10 foot.

SECTION 5600 - STORM DRAINAGE SYSTEMS & FACILITIES

CITY OF LEE'S SUMMIT, MISSOURI
DESIGN CRITERIA

This is Lee's Summit, Missouri's supplement to Section 5600 of the Kansas City Metropolitan Chapter of APWA Design Criteria, current edition. The following additions, deletions and/or revisions are adopted as a part of Section 5600 for use within Lee's Summit, Missouri.

5601.5 System Types and Applications

Under A. General Guidelines, delete the fourth paragraph and replace it with the following:

The engineered drainage system shall begin where the tributary area reaches 2 acres.

5601.8.A. Protection of Property
Add the following subparagraphs 3 and 4.

3. Master Drainage Plans

To address level of service issues on an individual building lot basis, the Developer shall submit a Master Drainage Plan with the engineering plans for each development. The plan shall cover all portions of the development whether it is to be developed as single or multiple final plats, and shall cover all areas outside of the existing or proposed public rights-of-way. All lots must be graded in accordance with the approved Master Drainage Plan. Information on the plan shall include, but not be limited to, the following.

a. Overall drainage map, including off-site tributary areas contributing to the runoff in the development.
b. Existing and proposed contours at two-foot or smaller contour intervals.
c. Property boundary, lot lines and numbers, and streets.
d. Location(s) of all existing and proposed swales and channels, either natural or improved, along with design flows, typical sections, details, upstream and downstream elevations, and approximate slope.
e. Limits of regulatory floodplain, where applicable.
f. Limits of 1% storm water surface elevation for all swales and channels not within regulatory floodplain.
g. Required buffer zones for natural streams.
h. The elevation of the minimum, or lowest, building opening elevation (MBOE) for each lot. If a lot is adjacent to or contains a designated swale or channel, the MBOE must be set at the 1% water surface elevation plus two feet. If there is significant change in elevation along a swale or channel, as determined by the City Engineer, multiple MBOEs may be required for different sides of the building.

i. ***Lots where walkout basements and daylight basement plans will be allowed.***

j. ***Finished elevations at all corners of each lot with a minimum of four elevations per lot.***

4. ***The Developer shall include on the plats for the development covered by the Master Drainage Plan, a restriction that the individual lot owner(s) shall not change or obstruct the drainage flow lines or paths on the lots, as shown on the Master Drainage Plan, unless specific application is made and approved by the City Engineer.***

5604.1.B Inlet Design - Type

Revise the dimension for opening length as follows:

Opening length, inside	4.0 ft (min), ***8.0 ft. (max)***

5604.1.C Inlet Design – Design Method

Revise references to Figures 5604-37 and 5604-38 to Figures 5604-19 and 5604-21 respectively.

Add the following sentences to the paragraph:

Figures 5604-2 through 5604-19 apply to a curb inlet with a 10-inch throat opening height, similar to Standard Drawing CI-2. For curb inlets with different opening heights, specific design calculations must be submitted.

5604.1 Inlet Design

Add the following as Paragraph D:

D. ***Location: Curb inlets shall not be located in the radius of two intersecting streets. Maximum spacing of inlets shall be 400 feet.***

Table 5603-1

Add the following under Closed Conduits

High Density Polyethylene Pipe (HDPE)	0.010

Kansas City Metropolitan Chapter
American Public Works Association
Standard Specifications & Design Criteria

Section 5600

Storm Drainage Systems & Facilities

February 16, 2011

AMERICAN PUBLIC WORKS ASSOCIATION
APWA
Your Comprehensive Public Works Resource

DIVISION V

SECTION 5600

STORM DRAINAGE SYSTEMS & FACILITIES

(February 16, 2011)

DIVISION V

DESIGN CRITERIA

5600 STORM DRAINAGE SYSTEMS & FACILITIES

APPROVED AND ADOPTED THIS 15 DAY OF DECEMBER 2010

KANSAS CITY METROPOLITAN CHAPTER

OF THE AMERICAN PUBLIC WORKS ASSOCIATION

TABLE OF CONTENTS

Section Page

SECTION 5601 ADMINISTRATIVE....1
5601.1 Introduction....1
5601.2 Definitions....1
5601.3 General Requirements and Applicability....4
5601.4 Existing Drainage System....4
5601.5 System Types and Applications....4
5601.6 Waivers....7
5601.7 Other Requirements....7
5601.8 Levels of Service....7

SECTION 5602 HYDROLOGY....11
5602.1 Scope....11
5602.2 Computation Methods for Runoff....11
5602.3 Runoff Coefficients....15
5602.4 Rainfall Mass....17
5602.5 Unit Hydrographs....17
5602.6 Rainfall Intensity....17
5602.7 Time of Concentration and Lag Time....18
5602.8 Hydrograph Routing....22
5602.9 Calibration and Model Verification....22

SECTION 5603 HYDRAULICS....27
5603.1 Hydraulic Calculations for Pipes, Culverts, and Open Channels....27
5603.2 Analysis of Systems by Computer Models....31

SECTION 5604 INLETS, MANHOLES AND JUNCTION BOXES....47
5604.1 Inlet Design....47
5604.2 Gutter Flow....47
5604.3 Gutter Capacity....48
5604.4 Freeboard Requirements....48
5604.5 Inverts and Pipes....48
5604.6 Loading Conditions for Structures....48
5604.7 Street Grade on Vertical Curves....48
5604.8 Curb Inlet Intercept Equations....49

SECTION 5605 NATURAL STREAMS....62
5605.1 Scope....62
5605.2 Natural Stream Benefits and Characteristics:....62

5605.3 Stream Preservation and Buffers Zones 64
5605.4 In Stream Construction - General Requirements 65
5605.5 Stream Assessment 65
5605.6 Discharge Outfalls 72
5605.7 Culverts, Bridges, and Above Grade Crossings 72
5605.8 Below Grade Stream Crossings 73
5605.9 Grade Control 73
5605.10 Floodplain Fills: 75
5605.11 Flood Control Projects: 75
5605.12 Bank Stabilization Projects 75
5605.13 Stream Restoration 77
5605.14 Comprehensive Stream Management: 77

SECTION 5606 ENCLOSED PIPE SYSTEMS 81
5606.1 Easements 81
5606.2 Capacity 81
5606.3 Pressure Flow 82
5606.4 Energy Dissipation: 82
5606.5 Velocity within the System 84
5606.6 Loading 84

SECTION 5607 ENGINEERED CHANNELS 85
5607.1 Introduction 85
5607.2 Easements 85
5607.3 Freeboard 85
5607.4 Channel Linings 85
5607.5 Lining Material 85
5607.6 Side Slopes 90
5607.7 Alignment Changes 90
5607.8 Vertical Wall Channels 90
5607.9 Energy Management 90

SECTION 5608 STORMWATER DETENTION AND RETENTION 91
5608.1 Scope 91
5608.2 Access and Easements 91
5608.3 Maintenance and Continued Performance 91
5608.4 5608.4 Performance Criteria 91
5608.5 Detention Methods: 94
5608.6 Required Submittals: 96
5608.7 Additional Requirements 96

SECTION 5609 PLAN REQUIREMENTS 97
5609.1 Scope 97
5609.2 General 97
5609.3 Type of Sheets in Plans 97
5609.4 Sheet Sizes 97
5609.5 Scales 97
5609.6 Required Information for Title Sheet: 98
5609.7 Required Information for General Layout Sheet: 98
5609.8 Required Information for Plan and Profile Sheets: 99
5609.9 Cross-Section Sheets 99
5609.10 Drainage Area Map 100
5609.11 Standard and Special Detail Sheets 100
5609.12 Traffic Control Plans (if required) 100
5609.13 Temporary Erosion Control Plan Sheets 100

5609.14 Grading Plan Sheets (if required) 100
5609.15 Property Line and Easement Sheets 100

SECTION 5610 REFERENCES 101

APPENDIX A Microsoft Visual Basic Function for Inlet Interception Calculations

* * * * *

LIST OF FIGURES

Figure Page

Figure 5601-1: Guide to Stormwater Management for Site Developmet 10
Figure 5602-1: Intensity-Duration-Frequency (IDF) Curves for Kansas City, Missouri 19
Figure 5602-2: Overland Flow (Inlet) Time Nomograph 20
Figure 5602-3: Channel Flow Time Nomograph 21
Figure 5602-4: 100-year Discharge per Kansas Rural Regression Formula (2000) and Gage Estimates 23
Figure 5602-5: 100-year Discharge per Missouri Rural Regression Formula and Gage Estimates 24
Figure 5602-6: Documented Extreme Streamflows (no return period estimates) in Kansas City and the Region, as Discharges per Unit Drainage Area 25
Figure 5602-7: Documented Extreme Streamflows (no return period estimated) in Kansas City and the Region, as Absolute Discharges 26
Figure 5603-1: Headwater Depth for Box Culverts with Inlet Control 33
Figure 5603-2: Headwater Depth for Concrete Pipe Culverts with Inlet Control 34
Figure 5603-3: Headwater Depth for Oval Concrete Pipe Culverts, Long Axis Horizontal with Inlet Control 35
Figure 5603-4: Headwater Depth for Oval Concrete Pipe Culverts, Long Axis Vertical with Inlet Control 36
Figure 5603-5: Headwater Depth for Corrugated Metal Pipe Culverts with Inlet Control 37
Figure 5603-6: Headwater Depth for Corrugate Metal Pipe – Arch Culvert with Inlet Control 38
Figure 5603-7: Headwater Depth for Circular Pipe Culverts with Beveled Ring Inlet Control 39
Figure 5603-8: Head for Concrete Pipe Culverts Flowing Full (n=0.12) 40
Figure 5603-9: Head for Concrete Box Culverts Flowing Full (n=0.012) 41
Figure 5603-10: Head for Oval Concrete Pipe Culverts, Long Axis Horizontal or Vertical Flowing Full (n=0.12) 42
Figure 5603-11: Head for Standard Corrugate Metal Pipe Culverts Flowing Full (n=0.024) 43
Figure 5603-12: Head for Standard Corrugated Metal Pipe-Arch Culverts Flowing Full (n=0.024) 44
Figure 5603-13: Head for Structural Plate Corrugated Metal Pipe Culverts Flowing Full (n=0.0328 to 0.0302) 45
Figure 5603-14: Head for Structural Plate Corrugated Metal Pipe Arch Culverts, 18 inch Corner Radius, Flowing Full (n=0.0328 to 0.0302) 46
Figure 5604-1: Curb Inlet (10' Throat) Minimum Hydraulic Dimensions 50
Figure 5604-2: Type CG-1 Curb, S_x=2%, S_o=0.5% 51
Figure 5604-3: Type CG-1 Curb, S_x=2%, S_o=1.0% 51
Figure 5604-4: Type CG-1 Curb, S_x=2%, S_o=2.0% 52
Figure 5604-5: Type CG-1 Curb, S_x=2%, S_o=3.0% 52
Figure 5604-7: Type CG-1 Curb, S_x=2%, S_o=4.0% 53
Figure 5604-6: Type CG-1 Curb, S_x=2%, S_o=6.0% 53
Figure 5604-8: Type CG-1 Curb, S_x=2%, S_o=10.0% 54
Figure 5604-9: Type CG-1 Curb, S_x=2%, S_o=8.0% 54
Figure 5604-10: Type CG-1 Curb, S_x=2%, S_o=12.0% 55
Figure 5604-11: Type CG-2 Curb, S_x=2%, S_o=0.5% 55
Figure 5604-12: Type CG-2 Curb, S_x=2%, S_o=1.0% 56
Figure 5604-13: Type CG-2 Curb, S_x=2%, S_o=2.0% 56
Figure 5604-14: Type CG-2 Curb, S_x=2%, S_o=3.0% 57

Figure 5604-15: Type CG-2 Curb, S_x=2%, S_o=4.0% ... 57
Figure 5604-16: Type CG-2 Curb, S_x=2%, S_o=6.0% ... 58
Figure 5604-17: Type CG-2 Curb, S_x=2%, S_o=8.0% ... 58
Figure 5604-19: Type CG-2 Curb, S_x=2%, S_o=12.0% ... 59
Figure 5604-18: Type CG-2 Curb, S_x=2%, S_o=10.0% ... 59
Figure 5604-20: Nomograph for Flow in Triangular Channels ... 60
Figure 5604-21: Capacity of Curb Opening Inlet at Sump ... 61
Figure 5605-1: Typical Stream Characteristics (1 of 3) ... 62
Figure 5605-2: Typical Stream Characteristics (2 of 3) ... 63
Figure 5605-3: Typical Stream Characteristics (3 of 3) ... 63
Figure 5605-4: Natural Channel Assessment ... 70
Figure 5605-5: Natural Channel ... 71
Figure 5605-6: Grade Control Structure ... 74
Figure 5606-1: Hydraulic Elements of Circular Conduits ... 81
Figure 5607-1: Permissible Shear Stresses for Non-Cohesive Soils ... 88
Figure 5607-2: Permissible Shear Stresses for Cohesive Soils ... 89
Figure 5608-1: Annual Sediment Storage ... 95

* * * * *

LIST OF TABLES

Table Page

Table 5601-1: Level of Service for Street Crossings ... 8
Table 5602-1: Antecedent Coefficient ... 11
Table 5602-2 Documented Extreme Stream Flows in Kansas City Area and Surrounding Region ... 12
Table 5602-3: Runoff Parameters ... 15
Table 5602-4: Rainfall Mass ... 17
Table 5602-5: Design Aide for Calculating Rainfall Intensity Kansas City Metropolitan Area ... 17
Table 5602-6: Travel Time Estimates for Future Development ... 22
Table 5603-1: Manning's Roughness Coefficient ... 28
Table 5603-2: Head Loss Coefficients ... 29
Table 5604-1: Inlet Configuration Dimensions ... 47
Table 5604-2: Gutter Spread Criteria ... 47
Table 5604-3: Inlet Bypass Spread Criteria ... 48
Table 5604-4: Values of Coefficients and Exponent ... 49
Table 5605-1: Stream Buffer Widths ... 64
Table 5605-2: Critical Shear Stresses For Channel Materials ... 67
Table 5605-3: Plan-Form Ratios ... 69
Table 5605-4: Channel Condition Scoring Matrix ... 78
Table 5605-5: Characteristics of Certain Plants for Bio-Engineering ... 80
Table 5606-1: Energy Dissipation Counter Measures ... 82
Table 5607-1: Permissible Shear Stresses for Lining Material ... 86
Table 5607-2: Classification of Vegetal Covers as to Degree of Retardance ... 87
Table 5609-1: Drawing Scales ... 98

* * * * *

DIVISION V

DESIGN CRITERIA

SECTION 5600 STORM DRAINAGE SYSTEMS & FACILITIES

SECTION 5601 ADMINISTRATIVE

5601.1 Introduction

These criteria provide uniform procedures for designing and checking the design of storm drainage systems under the rainfall and land characteristics typical of the Kansas City Metropolitan Area. This manual generally focuses on water quantity concerns including: conveyance, flow rates, and construction design parameters of stormwater systems. For an in-depth discussion of water quality design standards and Best Management Practices (BMPs) for the Kansas City Metropolitan area see the "Mid-America Regional Council and American Public Works Association; Manual for Best Management Practices for Stormwater Quality".

Federal law requires that "Waters of the United States may be disturbed only after permission is received from the City/County and permitted by the U.S. Army Corps of Engineers, if applicable. A jurisdictional determination by the U.S. Army Corps of Engineers shall be obtained prior to beginning design." Besides federal guidelines, specific criteria have been developed and are applicable to the types of drainage systems and facilities ordinarily encountered in local urban and suburban areas. Other special situations may be encountered that require added criteria or more complex technology than included herein such as maintaining or improving water quality. Any design procedure conforming to current accepted engineering practice may be used for the design of storm drainage systems in lieu of the computation methods presented in this manual, providing equivalent results are obtained and have been approved by the City/County Engineer. Drainage systems for all developments shall be designed assuming ultimate or built-out land-use conditions. The decision flowchart in Figure 5601-1, "Guide to Stormwater Management for Site Development", shall be used to determine the appropriate runoff controls (see end of this section).

5601.2 Definitions

Best Management Practice (BMP): Stormwater management practice used to prevent or control the discharge of pollutants to water of the U.S. BMPs may include structural or non-structural solutions, a schedule of activities, prohibition of practices, maintenance procedures, or other management practices. For a comprehensive discussion on BMPs refer to the "Mid-America Regional Council and American Public Works Association; Manual for Best Management Practices for Stormwater Quality".

City/County: The municipality or body having jurisdiction and authority to govern.

City/County Engineer: The municipal or county public works official or body having jurisdiction and authority to review and approve plans and designs for storm drainage systems.

Channel Lining: Includes any type of material used to stabilize the banks or bed of an engineered channel.

Design Storm: The combination of rainfall depth, duration, and distribution of a hypothetical rainfall event with a given likelihood of occurring in any year.

Detention Facility: A storm water management facility controlling storm water runoff from a site or watershed. The allowable runoff specified for detention facilities in Section 5608 is intended to manage maximum storm water release rates to minimize flooding and downstream erosion.

Detention Storage: The volume occupied by water above the level of the principal spillway crest during operation of a stormwater detention facility.

Developer: Any person, partnership, association, corporation, public agency, or governmental unit proposing to or engaged in "development".

Development: Any activity, including subdivision, that alters the surface of the land to create additional impervious surfaces, including, but not limited to, pavement, buildings, and structures. Refer to Section 5601.3 for applicability.

Dry Detention: A detention facility that is designed for the temporary storage of water to control discharge rates from the facility and is normally dry between rainfall events.

Easement: Authorization by a property owner for the use by another for a specified purpose, of any designated part of the property.

Emergency Spillway: A device or devices used to discharge water under conditions of inflow that exceed the design outflow from the primary spillway detention facility. The emergency spillway functions primarily to prevent damage to the detention facility that would permit the sudden release of impounded water.

Engineer: See 'Registered Professional Engineer'.

Engineered Channel: An open drainage channel that has been explicitly designed to convey stormwater runoff in accordance with Section 5607 or as approved by the City/County engineer.

FHWA: Federal Highway Administration.

Floodplain: A relatively level surface of stratified alluvial soils on either side of a watercourse that is inundated during flood events.

Freeboard: The difference in elevation between the top of a structure such as a dam or open channel and the maximum design water surface elevation or high water mark. It is an allowance against overtopping by waves or other transient disturbances.

Impact Stilling Basin: A device that dissipates energy by allowing flowing water to strike a stationary surface therefore producing turbulence and energy loss. .

Impervious Surface: A surface that prevents the infiltration of stormwater.

Improved Channel: Any channel changed by grading or the construction of lining materials as approved by the City/County Engineer.

Incision: Adjustment of the channel bed elevation downwards, typically in response to some type of disturbance.

Increased Runoff: Increase in volume or peak flow of stormwater runoff.

Meander Amplitude: The linear distance between the apex of one meander and the apex of the next meander in a naturally curving stream.

Meander Length: The length measured along the thalweg of one complete waveform.

Meander Wavelength: The length of one complete waveform, measured as the straight-line linear distance along the valley between two analogous points on a waveform.

Low-Drop Structures: A step pool energy dissipation structure typically constructed out of rock or concrete with a design vertical drop of 2 feet or less per step.

Natural Channel: Any waterway with the ability to self-form by virtue of having at least one unfixed boundary. This includes drainage ways that may have been previously disturbed but through inactivity over time have begun to reform one or more characteristics of undisturbed streams.

Open Channel: A maintained earthen or lined waterway with an open water surface as approved by the City/County engineer.

Ordinary High Water Mark: A line on the bank established by the fluctuations of water and indicated by physical characteristics such as clear, natural line impressed on the bank, shelving, changes in the character of soil, destruction of terrestrial vegetation, the presence of litter and debris, or other appropriate means that consider the characteristics of the surrounding areas.

Owner: The owner of record of real property.

Point Bars: Depositional features generally occurring on the inside of stream bends and opposite cut banks.

Pools: A deep reach of a stream. The reach of a stream between two riffles; a small and relatively deep body of quiet water in a stream or river.

Primary Outlet Works: A device such as an inlet, pipe, weir, etc., used to discharge water during operation of a storage facility under the conditions of the 1% storm or more frequent event.

Principal Stream: Stream Segments included in FEMA Flood Insurance Studies where the limits of the 1% floodplain and 1% base flood elevations have been determined.

Redevelopment: Remodeling, repair, replacement, or other improvements to any existing structure, facility, or site.

Registered Professional Engineer: A licensed engineer who is registered with and authorized to practice engineering within the state of registration.

Riffles: Shallow rapids in an open stream, where the water surface is broken into waves by obstructions such as natural channel armoring or bedrock outcrop wholly or partly submerged beneath the water surface.

Sediment Storage: The volume allocated to contain accumulated sediments within a detention facility.

Site: A tract or contiguous tracts of land owned and/or controlled by a developer or owner. Platted subdivisions, industrial and/or office commercial parks, and other planned unit developments shall be considered a single site. This shall include phased development where construction at a tract or contiguous tracts of land may occur in increments.

Storm: A rainfall event used for design which is defined by the probability such an event will be equaled or exceeded in any one year. When designing in according with these criteria, the storm event probabilities used are: 1%, 2%, 4%, 10% and 50%

Storm Drainage System: All of the natural and man-made facilities and appurtenances such as ditches, natural channels, pipes, culverts, bridges, open improved channels, swales, street gutters, inlets, and detention facilities which serve to convey surface drainage.

Swale: An engineered channel conveying stormwater from more than two lots; often the swale is maintained by the property owner but an easement is required when requested by the City/County.

Thalweg: The deepest part of a channel cross-section. The dominant thread of stream flow creates the thalweg.

Tributary Area: All land draining to the point of consideration, regardless of ownership.

Watershed: All the land area that drains to a given point.

Waveform: A complete cycle of two channel bends in opposite directions.

Wet Detention Facility: A detention facility that is designed to include permanent storage of water in addition to the temporary storage used to control discharge rates from the facility.

5601.3 General Requirements and Applicability

The design shall be accomplished under the direction of a Registered Professional Engineer qualified in the field of stormwater design. The design shall be based on land use in the tributary area as zoned, actually developed, or indicated by an adopted future land use plan, whichever basis produces the greatest runoff.

This design criterion shall apply to all development, including subdivision, which alters the surface of the land to create additional impervious surfaces, including, but not limited to, pavement, buildings, and structures with the following exceptions:

A. Redevelopment, Expansion, Renovation, Repair and Maintenance Activities Listed Below

1. Additions to, improvements, and repair of existing single-family and duplex dwellings.
2. Remodeling, repair, replacement, or other improvements to any existing structure or facility and appurtenances that does not cause an increased area of impervious surface on the site.
3. Remodeling, repair, replacement or other improvements to any existing structure or facility and appurtenances on sites smaller than two acres that does not cause an increased area of impervious surface on the site in excess of 10 percent of that previously existing.
4. Remodeling, repair, replacement, or other improvements to any existing structure or facility and appurtenances that does not cause an increased area of impervious surface on the site in excess of 10 percent of that previously existing, provided the total impervious area of the site is less than 5,000 square feet. (See "Site Planning for Urban Stream Protection" provided by the "Center for Watershed Protection" for a discussion on imperviousness and its effect on watershed health; http://www.cwp.org/SPSP/TOC.htm).

B. New Construction Meeting the Following Criteria

1. Construction of any one new single family or duplex dwelling unit, irrespective of the site area on which the structure may be situated, provided the total impervious area of the site is less than 5,000 square feet.
2. Construction of any buildings, structures, and/or appurtenant service roads, drives, and walks on a site having previously provided stormwater management, as defined in Section 5601.5 A4 as part of a larger unit of development, OR a site previously relieved of stormwater management requirements.

5601.4 Existing Drainage System

Existing drainage system component pipes, structures, and appurtenances within the project limits may be retained as elements of an improved system providing:

- They are in sound structural condition.
- Their hydraulic capacity, including surcharge, is equal to or greater than the capacity required by these criteria.
- Easements exist or are dedicated to allow operation and maintenance.

Discharge from an existing upstream storm drainage system shall be computed assuming its capacity is adequate to meet the performance criteria listed in Section 5601.8. The computed discharge shall be used to design the new downstream system even if the actual capacity of the existing upstream system is less.

5601.5 System Types and Applications

A. General Guidelines: Natural channels are to be preserved to the maximum extent practicable as site conditions permit. Design standards for natural channels are addressed in Section 5605. Engineered channels, the next highest priority system component, shall be designated and coordinated with the design

of building lots and streets in accordance with the design criteria and performance standards addressed in section 5607.

To the maximum extent possible, drainage systems, street layout and grades, lot patterns and placement of curbs, inlets and site drainage, and overflow swales shall be concurrently designed in accordance with the design criteria and performance standards set forth in this document. Curb and gutter may be omitted or modified where approved by the City/County Engineer and deemed feasible in conjunction with other stormwater management practices including water quality BMPs.

Enclosed conveyance systems consisting of inlets, conduits, and manholes may be used to convey stormwater runoff where site conditions and open space requirements will not permit the use of natural or engineered channels. Where used, such systems must be designed in accordance with design criteria and performance standards addressed in section 5606.

Generally, a drainage system is engineered and constructed when the drainage area exceeds 2 acres.

1. Open Systems: Where feasible, open systems consisting of open or engineered channels shall be used if all of the following design criteria and the conditions of Section 5601.8 are met:
    a. The channel slope is less than or equal to 5 percent or where appropriate armoring techniques are used to prevent erosion.
    b. The 50% storm velocity is less than or equal to 5 feet per second (fps) or where appropriate armoring techniques are used to prevent erosion.
    c. When 60 feet or farther away from top of bank to any existing or proposed habitable building, regardless of system design capacity.
2. Enclosed Systems: Enclosed systems consisting of underground pipes, culverts, and similar underground structures shall be used to convey stormwater at all locations whenever one of the following design criteria and the conditions of 5601.8 are met:
    a. Where natural channels or open systems are not feasible per the requirements set forth in Section 5605 and Section 5601.5-A1
    b. Within the right-of-way of streets with curbs, regardless of system design capacity.
3. Overflow Systems: Each conveyance element of the stormwater drainage system (whether open, enclosed, or detention) shall include an overflow element. Overflow systems shall:
    a. Be designed to route downstream any amount of the 1% storm exceeding the in-system design capacity specified in Section 5601.8.
    b. Include streets, engineered channels, redundant piping, spillways, parking lots, drives or combinations thereof.
    c. Limit the maximum water surface elevation generated by the 1% storm as specified in Section 5601.8.
    d. Conform to local standards regarding dedicated easements and/or restricted uses for overflow systems; consult with the local authority for requirements.
    e. Be limited to the natural drainage basins, unless overflows transferred out of a natural drainage basin (e.g. a thoroughfare straight-graded through a drainage basin with a sump in another drainage basin) are added to the overflows in the receiving drainage basin and the combined overflow still meets the criteria at 5601.5 A 3C
4. Stormwater Management: New development or redevelopment as defined in Section 5601.2 shall incorporate stormwater management measures to control runoff from the site. Allowable runoff from a site may be limited by the need to minimize downstream flood damage, prevent erosion, and/or

minimize impacts to the ecology and water quality of the downstream drainage system. It is recognized for site-level runoff controls to be effective, consistent application across a watershed is necessary to realize measurable benefits along the downstream system. This section presents four site runoff control strategies that can be applied to sites within a watershed based on watershed protection goals and identified problems. The City/County or local authority shall pre-determine which strategy is to be applied within its watersheds or subsheds. If watershed control strategies are not defined by the local authority, the default strategy for new development shall be the Comprehensive Protection strategy.

a. Default Strategy: Comprehensive Protection

Under this strategy, peak runoff control is provided for the 1%, 10% and 50% chance storms and volumetric and/or extended detention control of the 90% mean annual event storm for broad protection of the receiving system, including channel erosion protection and flood peak reductions over a range of return periods. This strategy shall be the default strategy unless otherwise designated or approved by the local authority. Performance standards and sizing criteria are provided in Section 5608.

b. Reduced Control Strategies

1) Frequent Event Control for Stream Erosion Protection: This strategy provides runoff control for the 10% and 50% chance storms and volumetric and/or extended detention control of the 90% mean annual event storm in order to protect downstream channels from erosion. This strategy is appropriate for largely undeveloped watersheds containing natural streams where downstream flooding of existing structures is not present and would not occur under future upstream full-development conditions.

2) Extreme Flood Event Control Only: Under this strategy, detention is provided solely to reduce peak runoff rates for the 10% and 1% storm events. Over-detention of the peak release rates at the discharge point (i.e. requiring the post-development rate to be less than the pre-development rate) is used to ensure a cumulative benefit for a reasonable distance downstream. If known flooding occurs downstream in flood events more frequent than the 10% event, the local authority may require control of these events.

This strategy is not effective at protecting stream channels and banks from erosion. It is most applicable in certain redevelopment and in-fill situations where flooding problems are known, existing downstream stream conditions are already poor, and economic barriers to redevelopment preclude more extensive control.

3) Special Locally-Defined Strategies: The City/County may develop alternative strategies that are tailored to the unique circumstances of their watersheds. Such strategies may apply globally to the City/County or only to certain designated areas. The City/County will identify each alternative strategy with a unique descriptor and publish the requirements for each.

Such alternative strategies may involve increased or decreased allowable release rates, relaxed or more stringent controls for certain storm return intervals, reliance on infiltration or low-impact development practices for added volume control, planning and open space controls, and/or special requirements to participate in regional control facilities instead of development-scale facilities.

Stormwater management for site development may include structural facilities and/or non-structural solutions. Where runoff controls are required, low-impact development practices or, off-site control of runoff in addition to or instead of the standard wet or dry bottom basins may be used.

5601.6 Waivers

The Developer may submit a study by a registered professional engineer that quantifies the problems and demonstrates that a waiver (exemption) of the requirement to provide stormwater management is appropriate. The City/County Engineer may waive requirements to address *unique* conditions or constraints:

A. Stormwater Management Facilities: Stormwater management facilities may be waived and/or release rates other than those permitted by Section 5608 when supported by a developer's Drainage Study performed in accordance with Section 5609 and approved by the City/County Engineer.

B. Overflow Channels: In previously developed areas, requirements to provide for 1% storm conveyance may be reduced by the City/County Engineer in circumstances where flood protection for the 1% storm is not reasonably attainable due to the location of damageable improvements with respect to the drainage system and where non-attainment is supported by an approved Drainage Study.

5601.7 Other Requirements

Rules and regulations of other agencies also pertain to drainage systems which may or may not complement these criteria. When conflicts are encountered, the more stringent criteria shall govern.

The following agencies have jurisdiction over streams and/or drainage systems and often require permits. Other regulations, permits and requirements may not be limited to these agencies.

- Federal Emergency Management Agency.
- U.S. Army Corps of Engineers.
- Missouri Department of Natural Resources.
- Kansas Department of Agriculture – Division of Water Resources.
- Kansas Department of Health and Environment
- Municipal Ordinances.

5601.8 Levels of Service

Drainage systems shall be designed to meet all levels of service described below. In addition, natural streams include requirements specified in Section 5605.

A storm drainage system shall be provided that is capable of conveying the peak discharge generated by the 1% storm. If the in-system capacity established in this section is less the 1% storm peak discharge, then an overflow system as specified in Section 5601.5 -A-3 may provide the additional system capacity.

A. Protection of Property

1. Property not reserved or designed for conveying storm water shall be protected from frequent inundation:

   a. When the total drainage area is less than 2 acres, protection may be provided by following good lot grading practices or by one of the conveyances described below.

   b. When the total drainage area is 2 acres or more, one of the following conveyances must be used to convey the 10% storm:

      1) Pipe system conveying the design storm under a regime of pressure flow with no overflow at inlets or manholes, or

      2) An engineered open channel conveying the 10% storm at bank full

      3) A street gutter

      4) A natural stream

2. Buildings shall be protected from infrequent flooding by:

   a. Providing a minimum of one-foot freeboard above the 1% storm stage, at any point along the drainage system, for openings in a building. For lakes and detention basins the 1% storm stage will be the water surface of flow through the emergency spillway.

   b. Flood-proofing a building below the 1% storm water surface elevation plus one foot of freeboard, in accordance with the current edition of the International Building Code or as required by the City/County.

   c. Non habitable accessory buildings are sometimes provided less protection by local City/County ordinances or policies. Consult the local authority for exceptions.

B. Protection for Streets

1. Gutter Spread: Water spread in streets shall meet the requirements in Section 5604.2 for the 10% design storm. These values are intended to establish a standard of accessibility for the widths (classes) of roadways listed during the 10% storm. When the local jurisdiction requires a higher standard for curb inlets, the conveyance system connected to the roadway must also meet that higher standard. If the roadway conveyance system connects to an underground system with lesser capacity, the system must be constructed to allow the discharge of that excess capacity into the overflow system.

2. Street Crossings: Concentrated flow not conveyed in the gutter system, shall be conveyed under streets to prevent vehicles from being swept from the roadway in infrequent storms. These crossings may be bridges, culverts or underground systems. A common practice is to construct the low point in the roadway so that it does not fall on the bridge or culvert. This practice protects the structure from damage in an overflow condition, but does not change this requirement. Crossings will be designed to completely convey flood flows without street overtopping in accordance with Table 5601-1.

Table 5601-1: Level of Service for Street Crossings

Street Classification	Min. Design Storm Capacity
Arterial	2%
Collector	4%
Residential	10%
Residential with open channel downstream	4%

Further, concentrated flow in excess of the minimum design storm may only overtop the roadway if the following conditions are met:

a. The span of the structure opening is less than 20 feet.

b. The peak stormwater runoff from the 1% storm is 250 cfs or less unless a guard fence is installed on the downstream side of the roadway.

Such overflow depths at low points in roadways during the 1% storm will be limited to 7 inches measured at the high point in the roadway cross section; except that it also shall not exceed 14 inches at the deepest point in the roadway cross section. Depths may be limited where necessary by reverse grading the downstream right of way area, by lengthening the vertical curve of the roadway, by reducing roadway crown, or by other similar means. Roadway overtopping depths shall be determined by integrating the broad crested weir formula across the roadway profile. Each incremental flow can be determined by using the formula:

$$q = C \cdot l \cdot h^{2/3}$$

Where:

q = the flow for an increment of profile length (width of flow)

l = the incremental width

C = a flow coefficient that shall not exceed 3.0

h = the average depth of flow at each increment

The total flow Q is the sum of the incremental flows. Depth determinations can be made through an iterative process where successive depths are chosen; Q is calculated for each depth and then compared to the known Q at the overtopping point.

Overflow protection criteria provides additional accessibility criteria at major stream crossings for emergency personnel, and provides the public with protection against injury and property damage.

C. Downstream Impacts

1. The negative impacts of development on flooding problems in the downstream system shall be mitigated through detention as specified in Section 5601.5-A-4, or through other means approved by the City/County.

   a. Impacts on natural channels are regulated in Section 5605.

   b. Communities that have adopted the recommended "Manual of Best Management Practices (BMPs) for Stormwater Quality" should also mitigate the negative impact of development on natural channels through the installation of water quality BMPs and closely adhere to practices specified in Section 5605 on natural channels.

D. Adjoining Property: State and Federal regulations often establish requirements for a storm drainage project that impacts adjoining property, especially when a project causes a rise in water surface elevations. In addition to all Federal and State regulations the following shall be met:

1. Drainageways not designated a Special Flood Hazard Area (FEMA 1% Floodplain): Construction of a storm drainage system, including grading and filling within a natural drainage way, requires agreement from adjoining property owners if the work will cause a rise in the water surface elevation on the adjoining property for the 1% storm. Agreement shall be considered granted by recording a document which reserves the affected property for inundation during the 1% storm, or by other means approved by the City/County.

2. Drainageways designated a Special Flood Hazard Areas (FEMA 1% Floodplain) and City/County participates in the National Flood Insurance Program: When impacting adjoining properties, refer to the local community's adopted Floodplain Management Ordinance for any requirements, in addition to all current FEMA regulation.

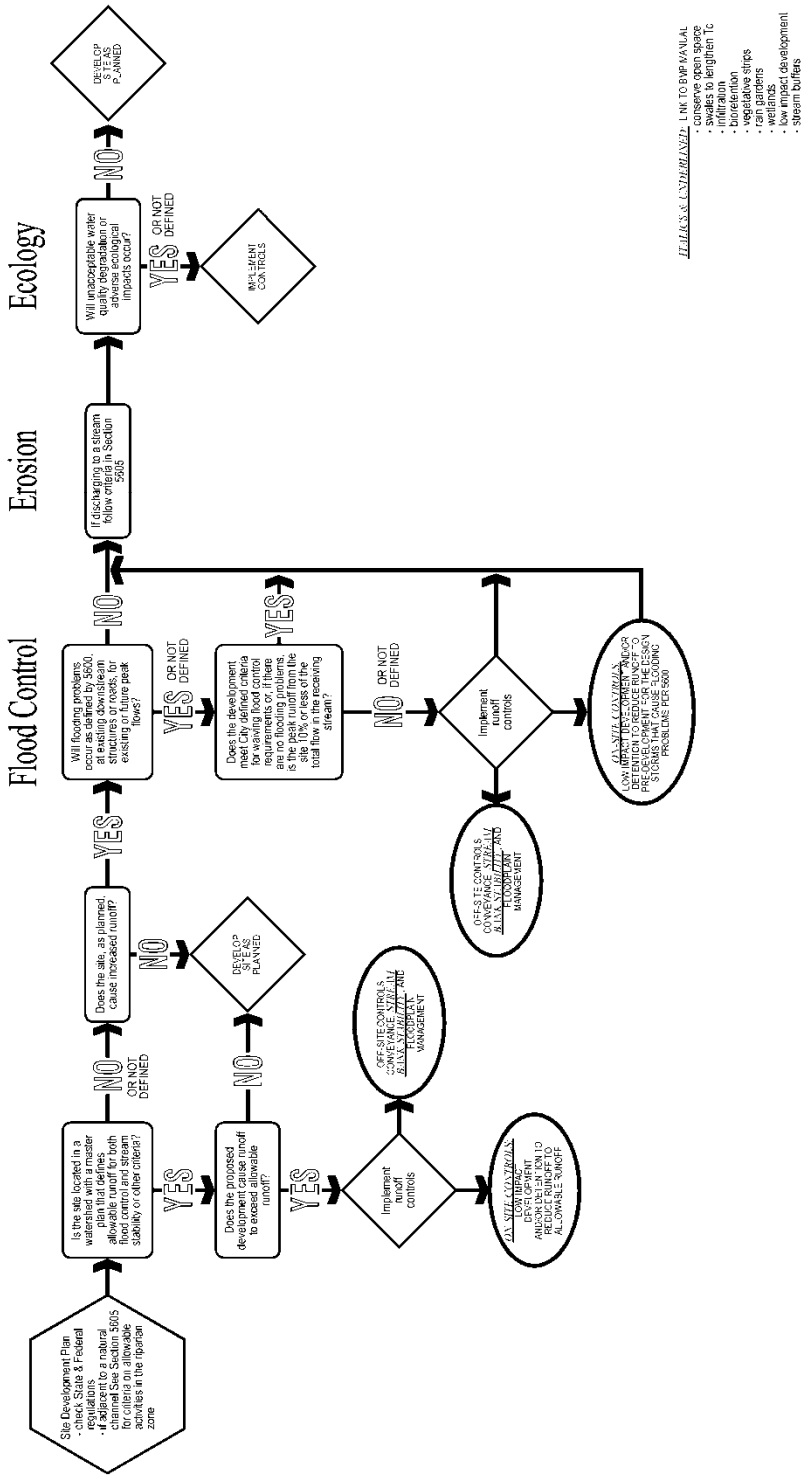

Figure 5601-1: Guide to Stormwater Management for Site Developmet

SECTION 5602 HYDROLOGY

5602.1 Scope

This section sets forth the hydrologic parameters to be used for computations involving the definition of runoff mass and peak rates to be accommodated by the storm drainage system. The methods to be used for calculating runoff mass and peak rates are intended for the design of drainage systems. Refer to the "Mid-America Regional Council and American Public Works Association; Manual for Best Management Practices for Stormwater Quality" for design methods and calculations of runoff water quality.

5602.2 Computation Methods for Runoff

Runoff rates to be accommodated by each element of the proposed storm drainage system shall be calculated using the criteria of this section for land use runoff factors, rainfall, and system time. The following methods of computations are allowed:

A. Watersheds Less than 200 Acres: The Rational Method may be used to calculate peak rates of runoff to elements of enclosed and open channel systems, including inlets, when the total upstream area tributary to the point of consideration is less than 200 acres. The Rational Method is defined as follows:

$$Q = K \cdot C \cdot i \cdot A$$

Where:

Q = Peak rate of runoff to system in cfs

C = Runoff coefficient as determined in accordance with Paragraph 5602.3

i = Rainfall intensity in inches per hour as determined in accordance with Paragraph 5602.6

K = Dimensionless coefficient to account for antecedent precipitation as follows, except the product of C·K shall not exceed 1.0. See Table 5602-1.

Table 5602-1: Antecedent Coefficient

Design Storm	K
10% and more frequent	1.0
4%	1.1
2%	1.2
1%	1.25

B. Baseline Unit Hydrograph Method: The following computer implementations of the unit hydrograph method are acceptable for all watersheds:

- SCS Technical Release No. 55 "Urban Hydrology for Small Watersheds", 2nd Edition, June 1986.
- 2. SCS Technical Release No. 20 "Project Formulation - Hydrology", 2nd Edition, May 1983.
- 3. U.S. Army Corps of Engineers, Hydrologic Engineering Center - "HEC-1Flood Hydrograph Package".
- 4. U.S. Army Corps of Engineers, Hydrologic Engineering Center - "HEC-HMS Hydrologic Modeling System", current version.

Copies of the above publications and micro-computer programs based thereon are available for purchase through National Technical Information Service, U.S. Department of Commerce, Springfield, VA 22161.

Inputs for unit hydrograph procedures shall conform to the requirements of sections 5602.3 through 5602.8.

C. Kansas "Calibrated" Design Method: In lieu of the input parameters set forth in sections 5602.3 through 5602.8, an alternative unit hydrograph method using HEC-1 or HEC-HMS and conforming to recommendations based on research conducted at the University of Kansas for gauged basins in Kansas (McEnroe and Zhao, August 2001 and McEnroe and Gonzalez, July 2002) are allowed. Such alternate procedures must use the appropriate total combinations of HEC-1 hypothetical storm distributions, storm durations, antecedent moisture conditions, unit hydrograph peaking coefficients, and basin lag times as calibrated in the research. All other computations shall be given as required in this standard.

Antecedent moisture condition adjustments shall be made only to the pervious component of a watershed, direct conversion of composite antecedent moisture conditions is not appropriate.

D. Other Alternative Design Methods: Alternative design methods, including computer models and Kansas "Calibrated" Design Method, may be employed so long as they produce runoff hydrographs to the system that are substantially the same or more conservative than those calculated by the baseline method. To assess the equivalence of such methods, the Engineer shall prepare estimates using both the alternate design method and the baseline unit hydrograph method, and shall report for every sub-basin the following data from both: peak flow rate, lag time, runoff volume, and equivalent curve number based on total storm precipitation and direct runoff. Any discrepancy greater than 5% between the two models shall be clearly identified, and discrepancies that produce less conservative results shall be justified. Testing of equivalence is not required if the alternative method has been proven to the City/County engineer to be consistently more conservative than the baseline unit hydrograph method or if the City/County Engineer has determined that the alternative method is reliably more accurate or appropriate for the design condition.

E. Regression Formulas: Rural regression formulas prepared by the U.S. Geological Survey for Kansas (Rasmussen and Perry, 2000) and Missouri (Alexander and Wilson, 1995) and urban regression formulas prepared for nationwide use (Sauer, Thomas, Stricker, and Wilson, 1983) or Missouri use (Becker, 1986), or their subsequent revisions, shall not be used as the sole input for project design, but are useful tools for evaluating design models. Rural regression formulas shall be used only to represent rural or pre-development conditions when significant basin storage does not exist. The Kansas rural regression formula produces substantially more conservative peak flow estimates than the Missouri equation and should be used unless specifically allowed otherwise by the City/County. For urban watersheds, the rural regression results can be used as inputs to the urban regression formula, or a pre-development scenario of the basin model can be developed to compare to the rural regression, and then physically realistic adjustments can then be made to impervious percentages, ground cover, basin lag times, and channel routing to produce the urban scenario. Figures 5602-4 and 5602-5 show typical results for Kansas and Missouri, including a summary of the gauge data estimates used to derive the equations. Table 5602-2 and Figures 5602-6 and 5602-7 present documented extreme stream flows in Kansas City and other areas. Engineers shall use caution in interpreting regression formula results and acknowledge the range of standard error and uncertainty of both the regression formulas and the underlying gauge estimates.

Table 5602-2 Documented Extreme Stream Flows in Kansas City Area and Surrounding Region

ID No.	USGS Station Number	Station Name	Contributing Drainage Area (sq. miles)	Date of Max. Discharge	Max. Recorded Discharge (cfs)	Max. Discharge per Basin Area (cfs/acre)	Period of Record (Water Yr.)	References
Kansas City Metropolitan Area, Missouri and Kansas								
1.	06821130	First Creek near Nashua	0.55	18-May-74	1,250	3.6	1959-84	1,7

Table 5602-2 Documented Extreme Stream Flows in Kansas City Area and Surrounding Region

ID No.	USGS Station Number	Station Name	Contributing Drainage Area (sq. miles)	Date of Max. Discharge	Max. Recorded Discharge (cfs)	Max. Discharge per Basin Area (cfs/acre)	Period of Record (Water Yr.)	References
2.	--	Turkey Creek trib. at Carter St. at Merriam, Ks.	0.82	12-Sep-77	1,200	2.3	--	3
3.	--	Little Blue River trib. at Noland Road at Independence, Mo.	0.83	12-Sep-77	2,330	4.4	--	3
4.	--	Rock Creek at Woodson and Martway St. at Mission, Ks.	1.15	12-Sep-77	1,980	2.7	--	3
5.	--	Tucker Creek at Highway FF near Grain Valley, Mo.	1.45	12-Sep-77	1,890	2.0	--	3
6.	--	Brush Creek at 75th and Nall at Prairie Village, Ks.	1.51	12-Sep-77	3,000	3.1	--	3
7.	--	White Oak Creek at Raytown, Mo. (Raytown Road)	1.78	12-Sep-77	2,290	2.0	--	3
8.	--	Cedar Creek at Lee's Summit, Mo. (Chicago-Rock Island and Pacific RR)	1.84	12-Sep-77	2,410	2.0	--	3
9.	06893710	Cates Branch near Liberty, Mo. (Sherril Drive)	1.95	12-Sep-77	2,480	2.0	--	3
10.	--	Mill Creek near Independence, Mo. (Courtney Road)	1.95	12-Sep-77	2,240	1.8	--	3
11.	--	Rock Creek at Sheridan Road at Fairway, Ks.	3.04	12-Sep-77	4,900	2.5	--	3
12.	--	Blue River trib. at Bannister Road near Kansas City, Mo. (U.S. Hwy 71)	3.38	13-Sep-77	4,040	1.9	--	3
13.	06893600	Rock Creek at Independence, Mo.	5.2	12-Sep-77	7,760	2.3	1967-75	3,7
14.	--	Brush Creek at 73rd St. and Mission Hills, Ks.	5.84	12-Sep-77	14,400	3.9	--	3
15.	06893570	Round Grove Creek at Raytown Road at Kansas City, Mo.	5.87	Sep-77	13,200	3.5		3
16.	06892800	Turkey Creek at Merriam, Ks. (67th St.)	6.76	12-Sep-77	5,300	1.2	1974-86	3,7
17.	--	Turkey Creek at Merriam, Ks. (63rd St.)	7.84	12-Sep-77	6,490	1.3	--	3
18.	06893560	Brush Creek at Main St. at Kansas City, Mo.	14.89	12-Sep-77	17,600	1.8	1971-79	3,7
19.	06894500	East Fork Fishing River at Excelsior Springs, Mo.	20	6-Jul-51	12,000	0.9	1951-72	1,2,7
20.	06892940	Turkey Creek at Kansas City, Ks. (State Hwy. 10)	22.3	1-May-83	12,500	0.9	1974-87	3,7
21.	06893350	Tomahawk Creek near Overland Park, Ks.	23.9	13-Aug-82	8,250	0.5	1970-82	4
22.	06893300	Indian Creek at Overland Park, Ks. (Marty St.)	26.6	9-Jun-84	12,800	0.8	1964-01	4
23.	06894680	Sni-A-Bar Creek near Tarsney, Mo. (Colburn Road)	29.1	12-Sep-77	15,700	0.8	1970-79	3,7
24.	--	Fishing Creek near Kearney,	39.4	22-Jun-47		1.2	--	2

Table 5602-2 Documented Extreme Stream Flows in Kansas City Area and Surrounding Region

ID No.	USGS Station Number	Station Name	Contributing Drainage Area (sq. miles)	Date of Max. Discharge	Max. Recorded Discharge (cfs)	Max. Discharge per Basin Area (cfs/acre)	Period of Record (Water Yr.)	References
		Mo.			30,000			
25.	06893080	Blue River near Stanley, Ks.	46	15-May-90	20,200	0.7	1970-01	4
26.	06893793	Little Blue River (below Longview Road Dam) at Kansas City, Mo.	50.7	13-Aug-82	18,700	0.6	1967-99	1,3,7
27.	" "	" " (2nd highest peak)	50.7	13-Sep-77	18,100	0.6	" "	1,3,7
Kansas, outside the Kansas City Metropolitan Area								
28.	--	Dry Walnut Creek trib. near Great Bend	1.19	15-Jun-81	3,080	4.0	--	4
29.	06889100	Soldier Creek near Goff	2.06	10-May-70	7,080	5.4	--	2,4
30.	--	Dry Walnut Creek trib. near Great Bend	2.28	15-Jun-81	5,720	3.9	--	4
31.	06912300	Dragoon Creek trib. near Lyndon	3.76	11-Jun-81	8,200	3.4	--	4
32.	06879650	Kings Creek near Manhattan	4.09	13-May-95	10,200	3.9	--	4
33.	07166700	Burnt Creek at Reece	8.85	9-Jun-65	20,500	3.6	--	2,4
34.	--	Mill Creek near Alta Vista	18.7	1951	19,800	1.7	--	6
35.	07184600	Fly Creek near Faulkner	27	3-Jul-76	28,000	1.6	1957-77	4
36.	06815600	Wolf River near Hiawatha	41	9-Aug-68	40,000	1.5	--	4
37.	07179600	Four Mile Creek near Council Grove	55	26-Jun-69	68,100	1.9	1964-77	4
38.	07181500	Middle Creek near Elmdale	92	27-Jun-69	60,000	1.0	'17, 38-90	4
Missouri, Outside the Kansas City Metropolitan Area								
39.	--	Nemo Branch at Nemo	0.52	30-May-56	1,950	5.9	--	2
40.	07011500	Green Acre Branch near Rolla	0.62	9-Jun-50	1,900	4.8	1948-75	1,2,7
41.	--	Boney Draw at Rockport	0.76	18-Jul-65	5,080	10.4	--	2
42.	--	Clear Creek tributary near Holt	6.52	22-Jun-47	14,000	3.4	--	2
43.	07019790	Plattin Creek at Plattin	65.8	Jun-64	36,800	0.9	1966-72	2,7
Midwest, Outside Missouri and Kansas								
44.	--	East Fork Big Creek near Bowlegs, Okla.	0.89	14-Apr-45	3,000	5.3	--	2

Table 5602-2 Documented Extreme Stream Flows in Kansas City Area and Surrounding Region

ID No.	USGS Station Number	Station Name	Contributing Drainage Area (sq. miles)	Date of Max. Discharge	Max. Recorded Discharge (cfs)	Max. Discharge per Basin Area (cfs/acre)	Period of Record (Water Yr.)	References
45.	--	Stratton Creek near Washta, Iowa	1.9	9-Aug-61	11,000	9.0	--	2
46.	--	West Fork Big Blue River trib. near York, Nebr.	6.9	9-Jul-50	23,000	5.2	--	2
47.	08057140	Cottonwood Creek at Forest Lane, Dallas, Tx.	8.5	28-Apr-66	17,600	3.2	1962-78	5,7
48.	--	Ranch Creek near Halley, Okla.	17.1	4-Sep-40	32,400	3.0	--	2

References Cited:

1. Alexander and Wilson. Technique for Estimating the 2-to 500-Year Flood Discharges on Unregulated Streams in Rural Missouri. USGS WRIR 95-4231. 1995
2. Crippen and Bue. Maximum Floodflows in the Conterminous United States. USGS WSP 1887. 1977.
3. Hauth. Floods in Kansas City, Missouri and Kansas, September 12-13, 1977. USGS Prof. Paper 1169. 1981.
4. Rasmussen and Perry. Estimate of Peak Streamflows for Unregulated Rural Streams in Kansas. USGS WRIR 00-4079. 2000.
5. Sauer et al. Flood Characteristics of Urban Watersheds in the United States. USGS WSP 2207. 1983.
6. USGS. Kansas-Missouri - Floods of July 1951. USGS WSP 1139. 1952.
7. USGS. Surface-Water Data for the Nation. Peak flow database at http://waterdata.usgs.gov/nwis/sw. Queried January 2003.

5602.3 Runoff Coefficients

A. **Basis of Curve Number Coefficients:** All Curve Number coefficients in this section are values for Hydrologic Group "C" soils. For soils in other Hydrologic Groups, equivalent SCS Curve Numbers can be found in SCS Technical Release No. 55. No soil disturbed by construction shall be assigned a Hydrologic Group classification of 'A' or 'B'.

B. **Standard Land Use/Zoning Classifications:** Runoff Coefficients relative to development, undeveloped land and land use shall have the values indicated in Table 5602-3.

Table 5602-3: Runoff Parameters

Land Use / Zoning	Average Percent Impervious	Average Percent Pervious	Rational Method "C"	SCS Curve Number
Business				
Downtown Area	95	5	0.87	97
Neighborhood Areas	85	15	0.81	94
Residential				
Single Family Areas	35	65	0.51	82
Multifamily Areas	60	40	0.66	88
Churches & Schools	75	25	0.75	92

Table 5602-3: Runoff Parameters

Land Use / Zoning	Average Percent Impervious	Average Percent Pervious	Rational Method "C"	SCS Curve Number
Industrial				
Light Areas	60	40	0.66	88
Heavy Areas	80	20	0.78	93
Parks, Cemeteries	10	90	0.36	76
Railroad Yard Areas	25	75	0.45	80
Undeveloped Areas	0	100	0.30	74
All Surfaces				
Impervious: Asphalt, Concrete, Roofs, etc.	100	0	0.90	98
Turfed	0	100	0.30	74
Wet Detention Basins	100	0	0.90	98

C. Rational Method "C" for Non-Standard Land Use/Zoning Classifications: The "C" value can be calculated from any type of land use and known percent impervious surface from the following equation:

$$C = 0.3 + 0.6 \cdot I$$

Where:

I = percent impervious divided by 100

D. Un-zoned, but Master Planned Areas: Areas whose future land use is defined by an adopted land use plan shall be assigned runoff coefficients for the land use indicated on such plan.

E. Agricultural and Unplanned Areas

1. Existing Conditions: For purposes of determination of development impact, undeveloped areas whose current land use is agriculture (crops, pasture, meadow) shall be assigned a maximum of 0% impervious surface or a maximum Curve Number equivalent to good condition pasture, grassland or range (C=0.30, CN=74).

2. Proposed Conditions: Undeveloped areas designated as agricultural or those areas for which no specific land use is indicated shall be assigned a minimum of 35% impervious surface for purposes of the design of storm drainage systems (C=0.51, CN = 82).

F. Composite Coefficients: As an alternative to the above coefficients and for areas not listed above (office parks, shopping centers, trailer parks, etc.), a composite runoff coefficient based on the actual percentages of pervious and impervious surfaces shall be used.

5602.4 Rainfall Mass

The U.S. Soil Conservation Service (SCS) Type 2 twenty-four hour rainfall distribution shall be used for all computations that employ the use of rainfall mass. That rainfall distribution is reproduced in Table 5602-4.

Table 5602-4: Rainfall Mass

Time in Hours	Accumulated Rainfall in Percent of 24-hour Rainfall
0.0	0.00
2.0	2.20
4.0	4.80
6.0	8.00
8.0	12.00
9.0	14.70
9.5	16.30
10.0	18.10
10.5	20.40
11.0	23.50
11.5	28.30
11.75	38.70
12.0	66.30
12.5	73.50
13.0	77.20
13.5	79.90
14.0	82.00
16.0	88.00
20.0	95.20
24.0	100.00

5602.5 Unit Hydrographs

The SCS Dimensionless Unit Hydrograph (either curvilinear or triangular) shall be the basis for computation of runoff hydrographs.

5602.6 Rainfall Intensity

Rainfall intensity shall be determined from Figure 5602-1 or Table 5602-5 using a calculated Time of Concentration.

Table 5602-5: Design Aide for Calculating Rainfall Intensity Kansas City Metropolitan Area

Return Period	Equation 1 $5 \leq T_c \leq 15$	Equation 2 $15 < T_c \leq 60$
2 yr.	$i = \frac{119}{T_c + 17}$	$i = \frac{134}{T_c + 21.4}$
5 yr.	$i = \frac{154}{T_c + 18.8}$	$i = \frac{182}{T_c + 25}$

Table 5602-5: Design Aide for Calculating Rainfall Intensity Kansas City Metropolitan Area

Return Period	Equation 1 $5 \leq T_c \leq 15$	Equation 2 $15 < T_c \leq 60$
10 yr.	$i = \frac{175}{T_c + 18.8}$	$i = \frac{214}{T_c + 26.7}$
25 yr.	$i = \frac{203}{T_c + 18.8}$	$i = \frac{262}{T_c + 28.8}$
50 yr.	$i = \frac{233}{T_c + 19.8}$	$i = \frac{296}{T_c + 29.6}$
100 yr.	$i = \frac{256}{T_c + 19.8}$	$i = \frac{331}{T_c + 30}$

5602.7 Time of Concentration and Lag Time

Time of Concentration (T_C) is equal to the overland flow time to the most upstream inlet or other point of entry to the system, Inlet Time (T_I), plus the time for flow in the system to travel to the point under consideration, Travel Time (T_T).

$$T_C = T_I + T_T$$

A. Inlet Time: T_I shall be calculated by the following formula or determined graphically from Figure 5602-2, but shall not be less than 5.0 minutes nor greater than 15.0 minutes:

$$T_I = 1.8 \cdot (1.1 - C) \cdot \frac{D^{1/2}}{S^{1/3}}$$

Where:

T_I = Inlet Time in minutes

C = Rational Method Runoff Coefficient as determined in accordance with paragraph 5602.3

D = Overland flow distance parallel to slope in feet (100 feet shall be the maximum distance used for overland flow)

S = Slope of tributary area surface perpendicular to contour in percent.

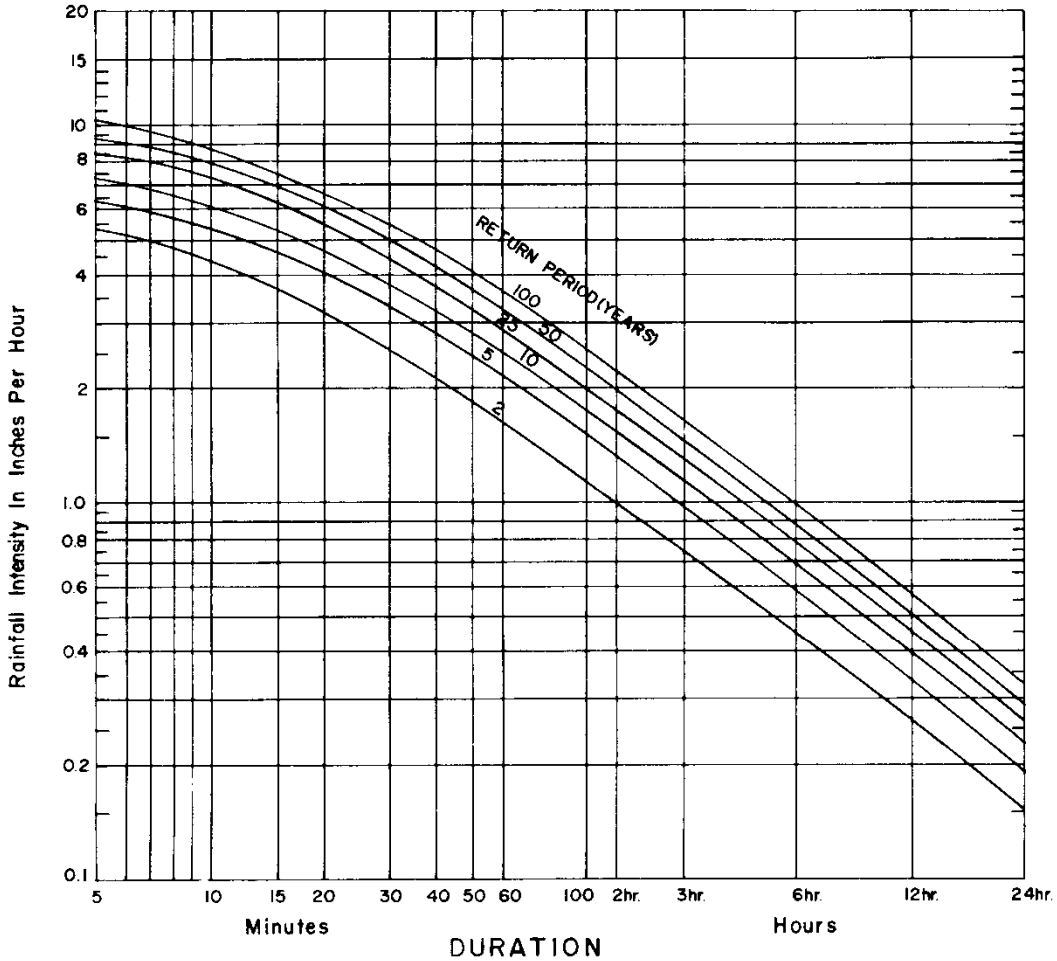

REFERENCES

1. NOAA Technical Memorandum NWS HYDRO-35 National Oceanic and Atmospheric Administration Of The National Weather Service, Department Of Commerce Silver Spring, Md., June 1977.

2. Technical Paper No. 40, Rainfall Frequency Atlas For Durations From 30 Minutes To 24 Hours And Return Periods From 1yr To 100 Yrs. U.S. Weather Bureau, Department Of Commerce, Washington, D.C., January 1963.

3. Design Of Urban Highway Drainage-State Of The Art FHWA-TS-79-225 U.S. Department Of Transportation Federal Highway Administration, Washington, D.C., August 1979.

Figure 5602-1: Intensity-Duration-Frequency (IDF) Curves for Kansas City, Missouri (1896 to 1972)

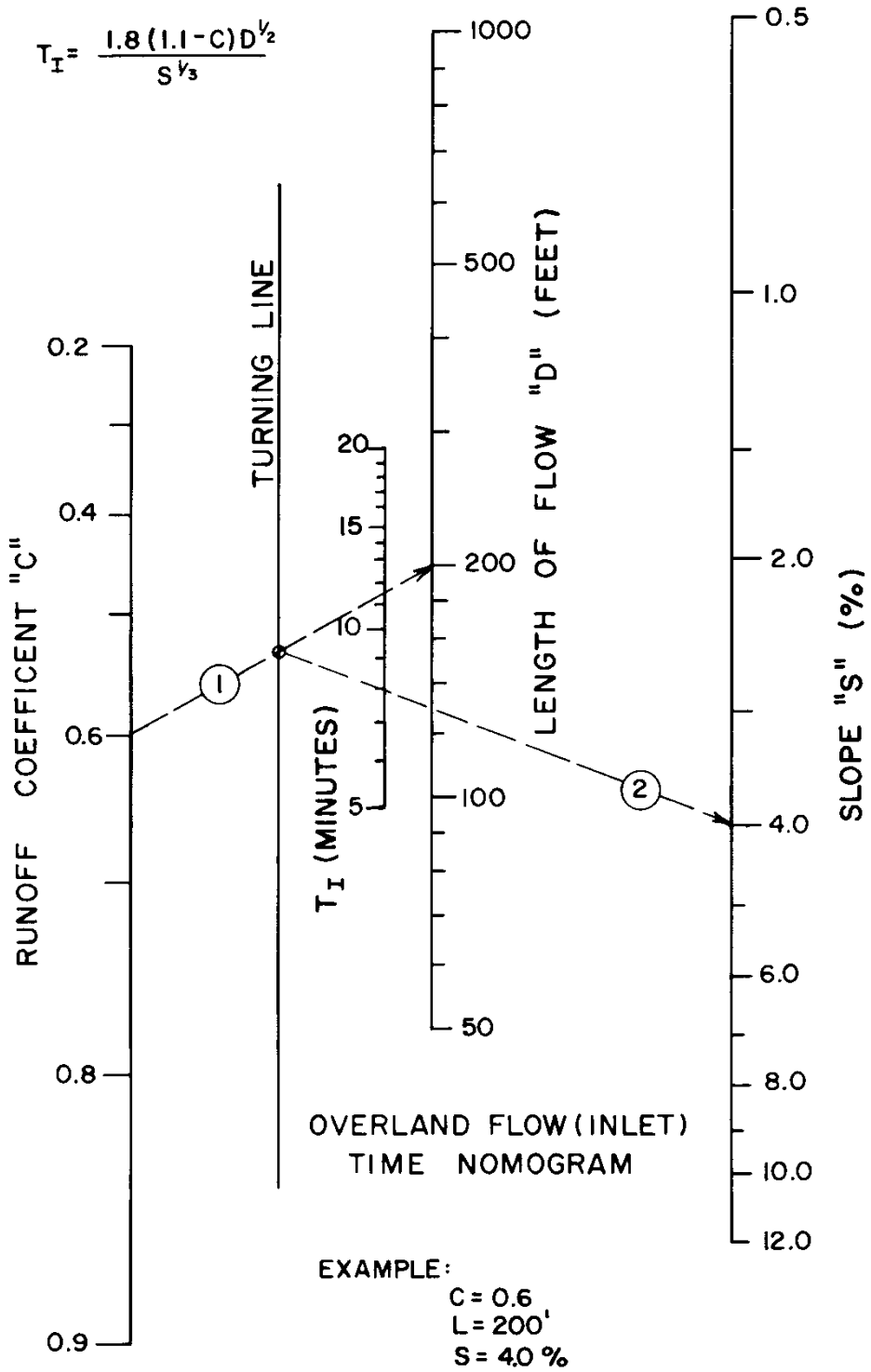

Figure 5602-2: Overland Flow (Inlet) Time Nomograph

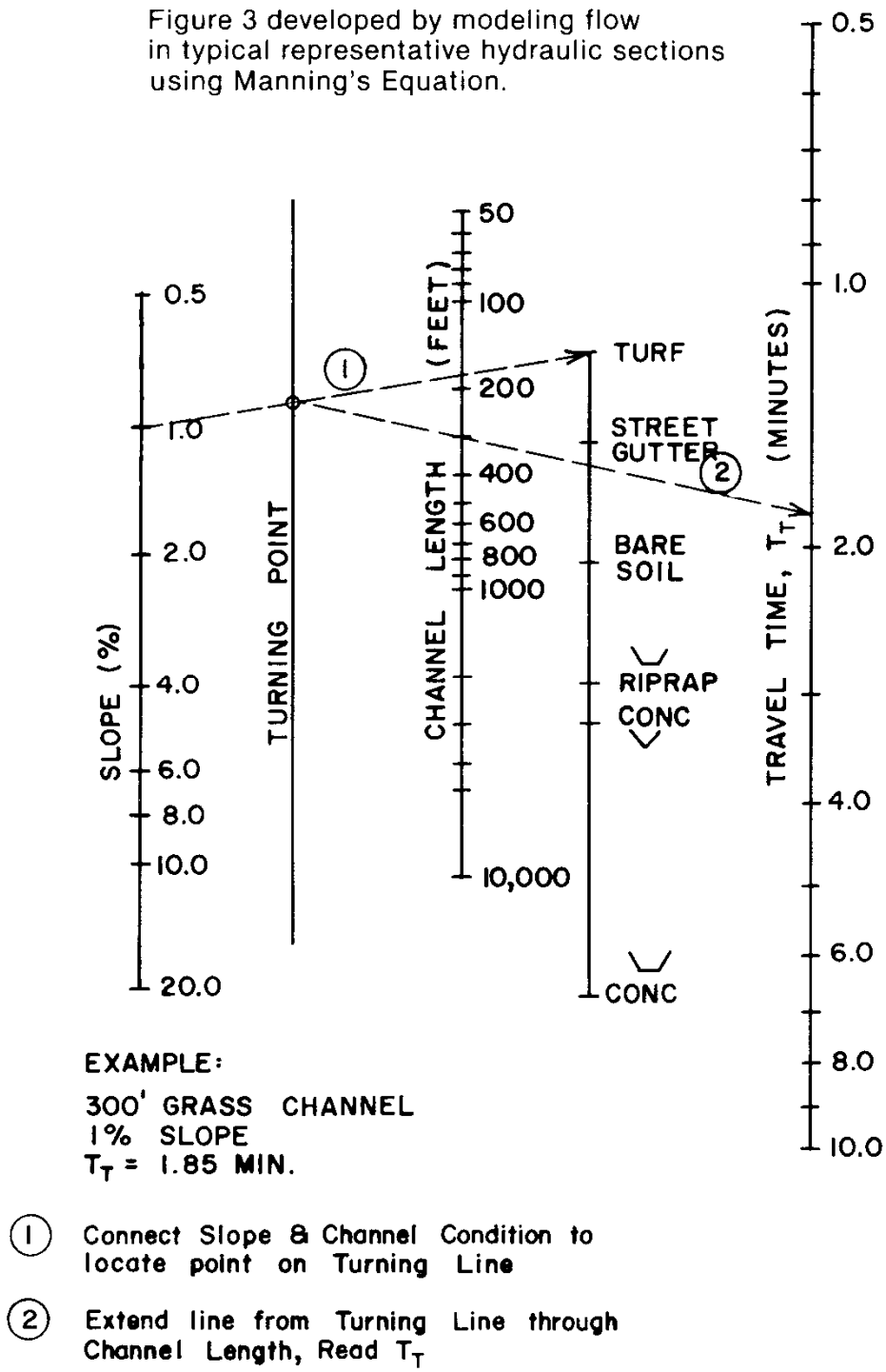

EXAMPLE:

300' GRASS CHANNEL
1% SLOPE
T_T = 1.85 MIN.

(1) **Connect Slope & Channel Condition to locate point on Turning Line**

(2) **Extend line from Turning Line through Channel Length, Read T_T**

Figure 5602-3: Channel Flow Time Nomograph

A. Travel Time: T_T shall be calculated as the length of travel in the channelized system divided by the velocity of flow. Velocity shall be calculated by Manning's equation assuming all system elements are flowing full without surcharge. Travel time may be determined graphically from Figure 5602-3 in lieu of calculation.

To provide for future development when the upstream channel is unimproved, the Table 5602-6 shall be used for calculating T_T.

Table 5602-6: Travel Time Estimates for Future Development

Average Channel Slope (%)	Velocity (ft/sec)
< 2	7
2 to 5	10
> 5	15

B. Lag Time: Lag Time (T_L) is the calculated time between the maximum rainfall intensity of a storm and the point of maximum discharge on the outlet hydrograph. Lag Time is used instead of time of concentration for unit hydrograph models. It shall be calculated as 3/5th the time of concentration (T_c) given by paragraph 5602.7 (A and B).

5602.8 Hydrograph Routing

Routing of hydrographs through storage elements or reservoirs shall be by modified- Puls level pool routing. Routing through channels shall be by the Muskingum-Cunge method. If the detention effect of significant storage in channels behind roadway embankments or culverts is to be modeled, the area impacted by the storage shall be modeled as a reservoir, and the remainder of the channel modeled using Muskingum- Cunge. Such incidental detention shall not be used for design discharge estimates unless allowed by the City/County and it can be reliably demonstrated that such storage will be maintained over the useful life of the proposed improvements.

5602.9 Calibration and Model Verification

All design discharge estimates should be calibrated to the extent possible using reliable gauge data, high water marks, or historical accounts. Model results should be evaluated to verify that they are reasonably conservative as compared to observed data and standard practice. Model calibration shall not be used to justify discharge estimates that are lower than those provided by the baseline unit hydrograph method, unless unusual site specific factors justify, where the hydrologic impact of such factors must be thoroughly examined and documented. Engineers shall recognize the significant uncertainty associated with design discharge estimates and provide estimates that are reasonably conservative and protective of the public interest. To permit model verification, discharge rates (expressed as absolute discharge or discharge per acre of tributary area) shall be plotted relative to tributary area and compared to regression formula results, gauge estimates, and/or known historical extremes.

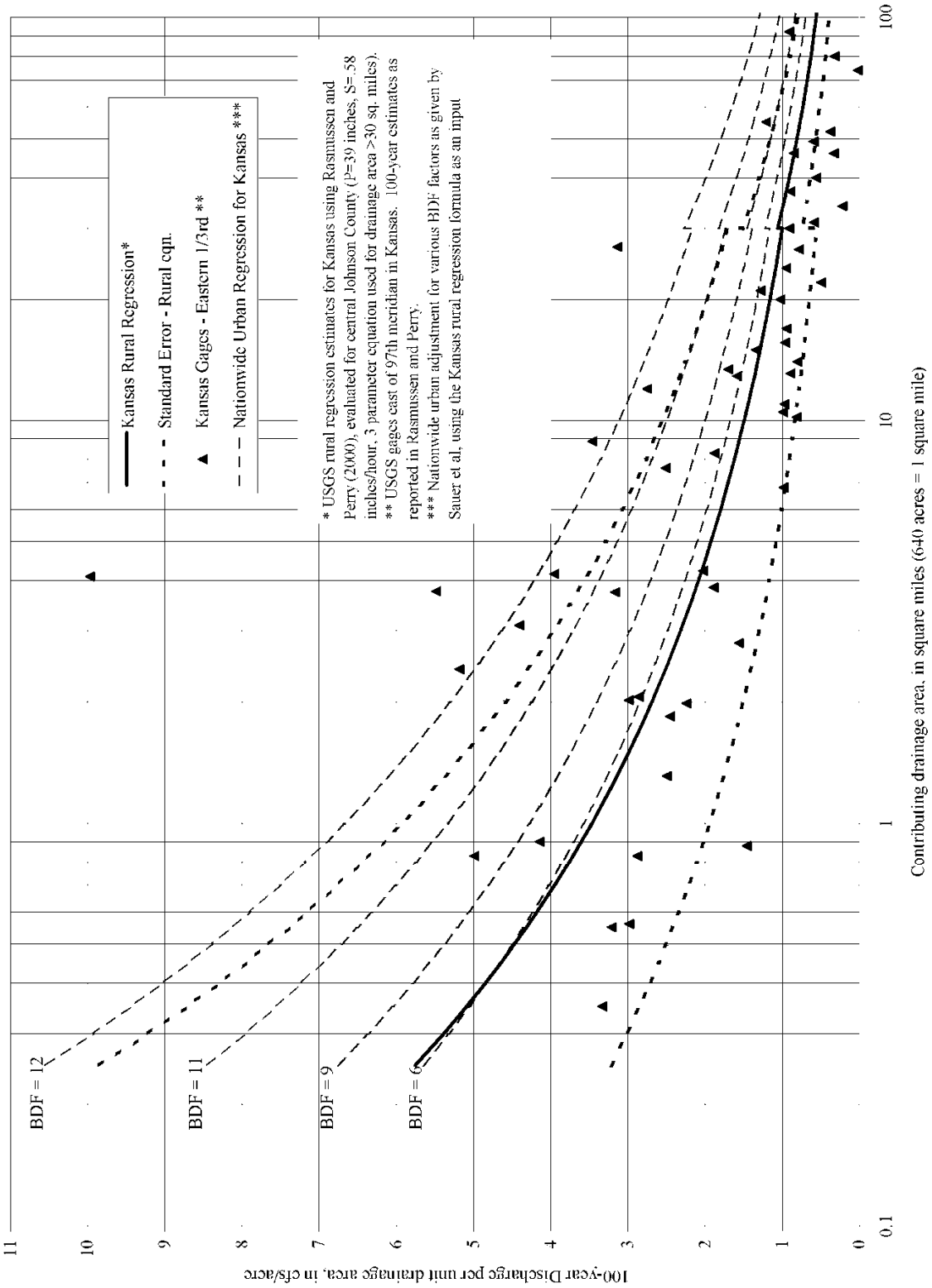

Figure 5602-4: 100-year Discharge per Kansas Rural Regression Formula (2000) and Gage Estimates

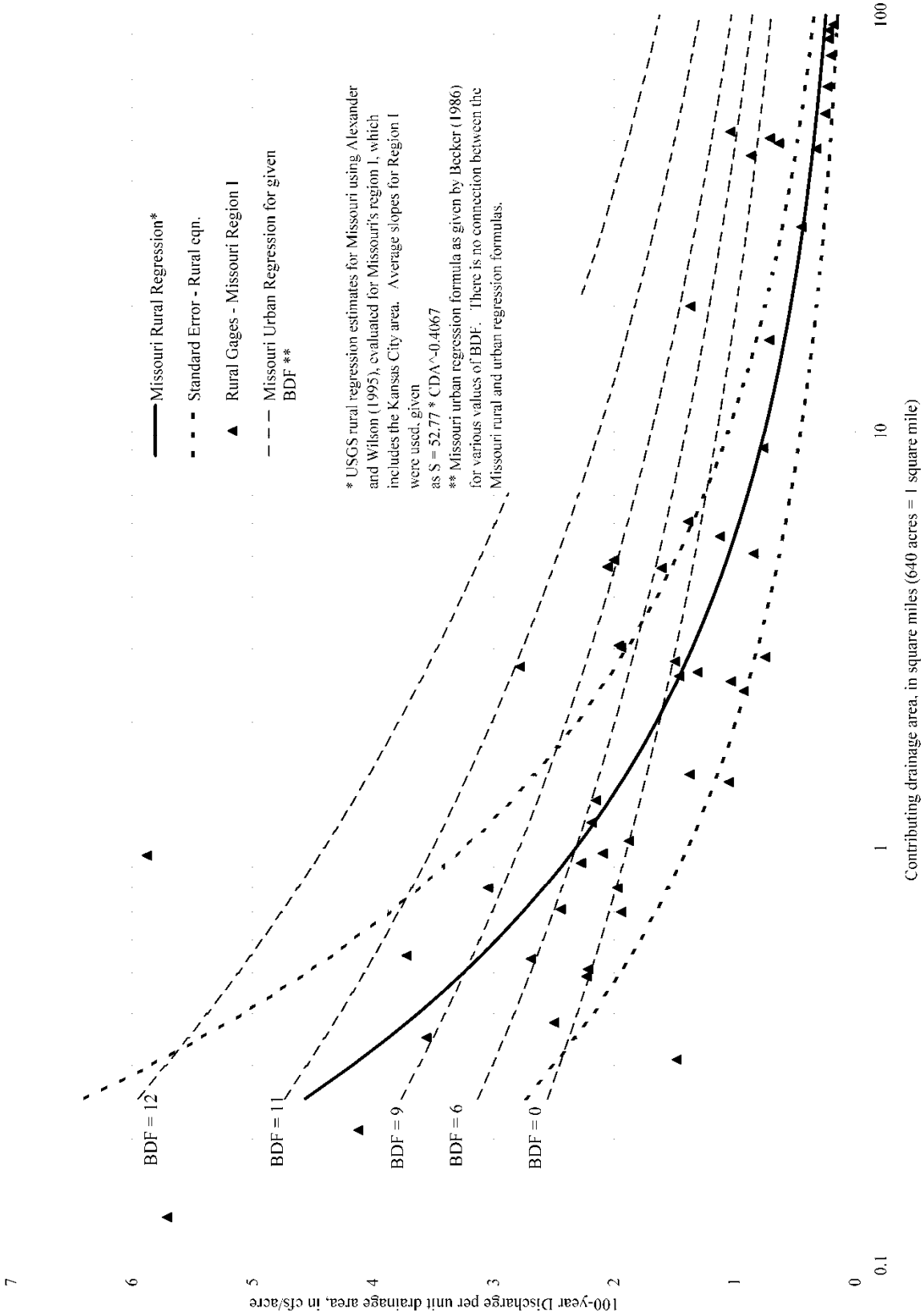

Figure 5602-5: 100-year Discharge per Missouri Rural Regression Formula and Gage Estimates

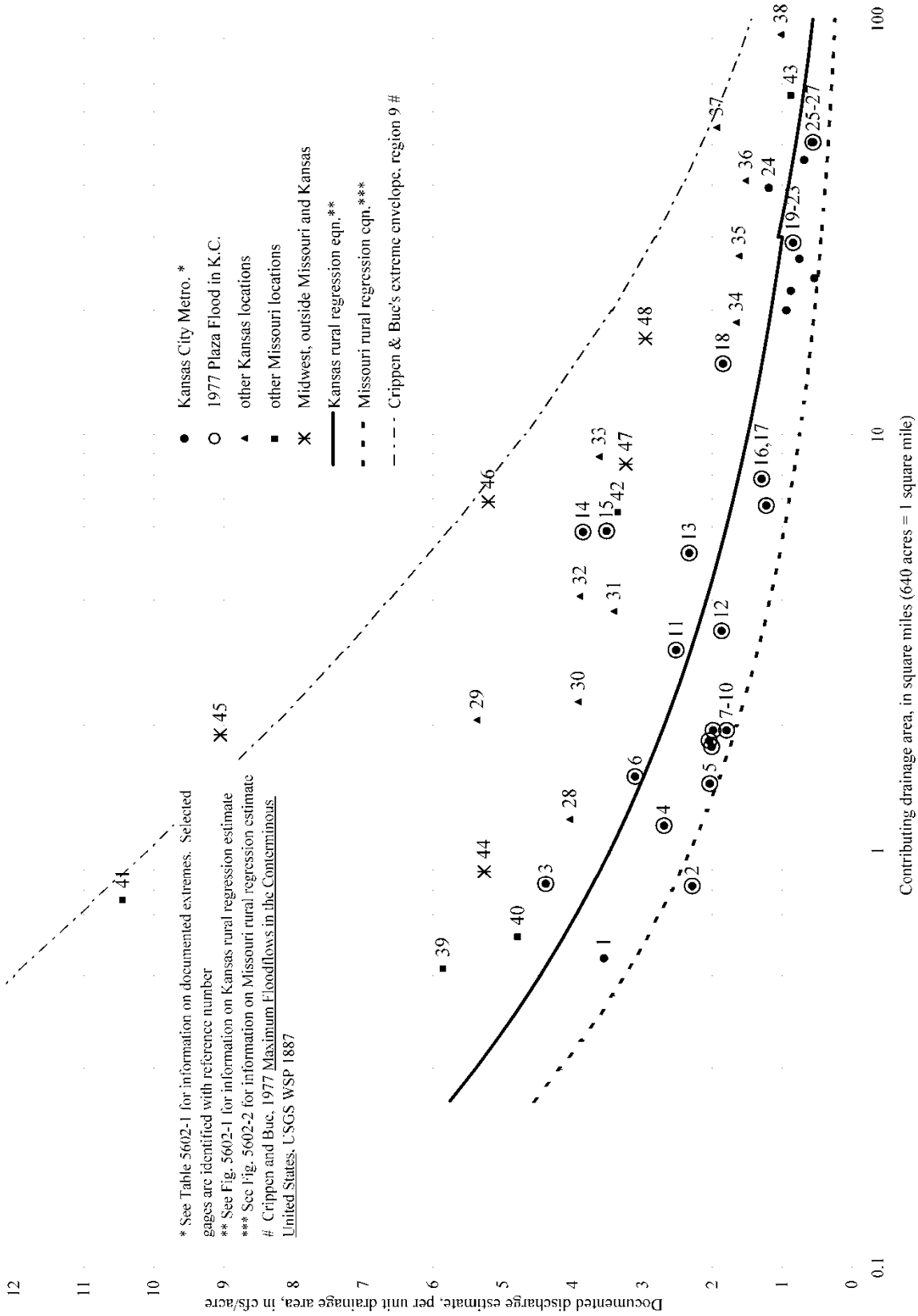

Figure 5602-6: Documented Extreme Streamflows (no return period estimates) in Kansas City and the Region, as Discharges per Unit Drainage Area

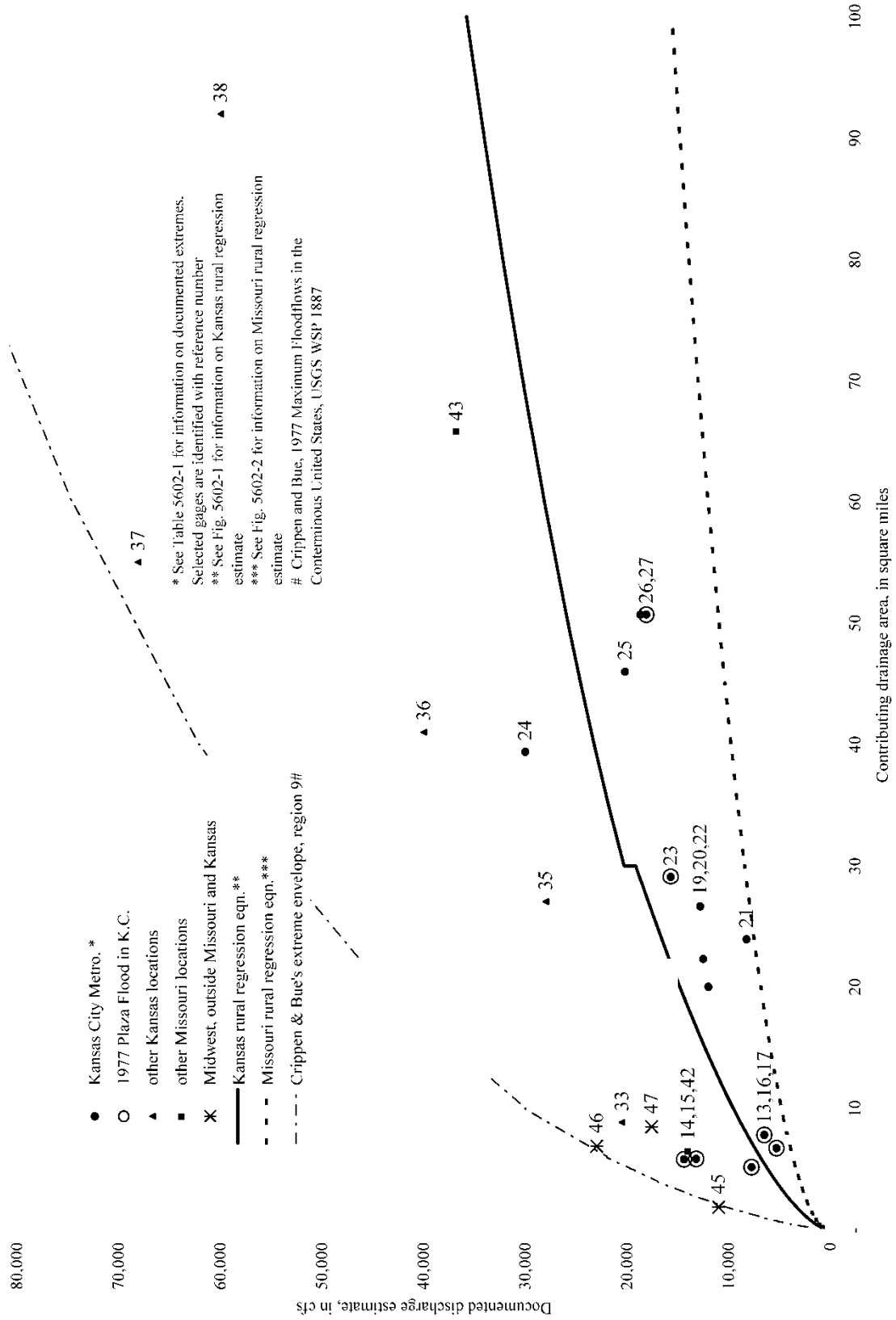

Figure 5602-7: Documented Extreme Streamflows (no return period estimated) in Kansas City and the Region, as Absolute Discharges

SECTION 5603 HYDRAULICS

5603.1 Hydraulic Calculations for Pipes, Culverts, and Open Channels

A. **Gravity versus Pressure Flow for Enclosed Systems:** Two design philosophies exist for sizing storm drains under the steady uniform flow assumption. The first is referred to as open channel, or gravity flow design, in which the water surface within the conduit remains open to atmospheric pressure. Pressure flow design, on the other hand, requires that the flow in the conduit be at a pressure greater than atmospheric. For a given flow rate, design based on open channel flow requires larger conduit sizes than those sized based on pressure flow. While it may be more expensive to construct storm drainage systems designed based on open channel flow, this design procedure provides a margin of safety by providing additional headroom in the conduit to accommodate an increase in flow above the design discharge. Under most ordinary conditions, it is recommended that storm drains be sized based on a gravity flow criteria at full flow or near full. Pressure flow design may be justified in certain instances. As hydraulic calculations are performed, frequent verification of the existence of the desired flow condition should be made.

Storm drainage systems can often alternate between pressure and open channel flow conditions from one section to another (U.S. Department of Transportation Federal Highway Administration, 1996).

For gravity flow conditions, Manning's formula shall be used as described below.

$$Q = \frac{1.486}{n} A R^{2/3} S^{1/2}$$

Where:

Q = Discharge, cubic feet per second

A = Cross sectional area of flow, square feet

n = Manning's roughness coefficient (see Table 5603-1)

R = Hydraulic radius, feet

$$R = \frac{A}{P}$$

S = Slope in feet per foot

P = Wetted perimeter in feet

In closed conduits flowing under pressure flow, the energy grade line (EGL) will be above the crown of the pipe. In this case, the Bernoulli equation shall be used to calculate pipe capacity:

$$\frac{p_1}{\gamma} + \frac{{V_1}^2}{2g} + z_1 = \frac{p_2}{\gamma} + \frac{{V_2}^2}{2g} + z_2 + h_f + h_m$$

Where:

$\frac{p_1}{\gamma}$ = pressure head in the upstream system segment, feet

$\frac{{V_1}^2}{2g}$ = velocity head in the upstream system segment, feet

z_1 = elevation of the system invert in the upstream system segment, feet

$\frac{p_2}{\gamma}$ = pressure head in the upstream system segment, feet

$\frac{{V_2}^2}{2g}$ = velocity head in the upstream system segment, feet

z_2 = elevation of the system invert in the upstream system segment, feet

h_f = friction loss in the downstream system segment in feet

h_m = minor system losses in the downstream segment in feet

Pipe friction losses, h_f, may be calculated the friction slope method.

B. Friction Slope Method

This derivation of Manning's equation is from (FHWA, 1996).

$$h_f = S_f L$$

$$S_f = \frac{(Q \cdot n)^2}{\left(1.486\, A \cdot R^{\frac{2}{3}}\right)^2}$$

S_f = friction slope, feet/foot (which is also the slope of the HGL)

Minor losses, h_m, shall be calculated by:

$$h_m = k \cdot \frac{v^2}{2g}$$

Where:

k = Coefficient as shown in Table 5603-2

A step-by-step procedure for manual calculation of the EGL using the energy loss method is presented in Section 7.5 of (FHWA, 1996). For most drainage systems, computer methods such as HYDRA, StormCAD, CulvertMaster, or SWMM are the most efficient means of evaluating the EGL and designing the system elements.

Table 5603-1: Manning's Roughness Coefficient

Type of Channel	n
Closed Conduits	
Reinforced Concrete Pipe (RCPs)	0.013
Reinforced Concrete Elliptical Pipe	0.013
Corrugated Metal Pipe (CMPs):	
2⍰ x ½in. Annular or Helical Corrugations unpaved - plain	0.024
2⍰ x ½in. Annular or Helical Corrugations paved invert	0.021
3x1 in. Annular or Helical Corrugations unpaved - plain	0.027
3x1 in. Annular or Helical Corrugations paved invert	0.023
6x2 in. Corrugations unpaved - plain	0.033
6x2 in. Corrugations paved invert	0.028
24" diameter and smaller with Helical Corrugations.*	0.020
Vitrified Clay Pipe	0.013
Asbestos Cement Pipe	0.012
Open Channels (Lined)	
Gabions	0.025
Concrete	
Trowel Finish	0.013

Table 5603-1: Manning's Roughness Coefficient

Type of Channel	n
Float Finish	0.015
Unfinished	0.017
Concrete, bottom float finished, with sides of	
Dressed Stone	0.017
Random Stone	0.020
Cement Rubble masonry	0.025
Dry Rubble or Riprap	0.030
Gravel bottom, side of	
Random Stone	0.023
Riprap	0.033
Grass (Sod)	0.030
Riprap	0.035
Grouted Riprap	0.030
Open Channels (Unlined) Excavated or Dredged	
Earth, straight and uniform	0.027
Earth, winding and sluggish	0.035
Channels, not maintained, weeds & brush uncut	0.090
Natural Stream	
Clean stream, straight	0.030
Stream with pools, sluggish reaches, heavy underbrush	0.100
Flood Plains	
Grass, no brush	0.030
With some brush	0.090
Street Curbing	0.014

*Allowed only when the pipe length between structures is at least 20 pipe diameters.

Table 5603-2: Head Loss Coefficients

Condition	k
Manhole, junction boxes and inlets with shaped inverts:	
Thru flow	0.15
Junction	0.40
Contraction transition	0.10
Expansion transition	0.20
90 degree bend	0.40
45 degree and less bends	0.30
Culvert Inlets:	
Pipe, Concrete	
Projecting from fill, socket end (grove end)	0.20

Table 5603-2: Head Loss Coefficients

Condition	k
Projecting from fill, sq. cut end	0.50
Headwall or headwall and wingwalls	
Socket end of pipe (groove end)	0.20
Square edge	0.50
Round (radius=1/12D)	0.20
Mitered to conform to fill slope	0.70
Standard end section	0.50
Beveled edges, 33.7º or 45º bevels	0.20
Side or slope-tapered inlet	0.20
Pipe, or Pipe-Arch, Corrugated Metal	
Projecting from fill (no headwall)	0.90
Headwall or headwall and wingwalls square edge	0.50
Mitered to conform to fill slope, paved or unpaved slope	0.70
Standard end section	0.50
Beveled edges, 33.7º or 45º bevels	0.20
Side or slope-tapered inlet	0.20
Box, Reinforced Concrete	
Headwall parallel to embankment (no wingwalls)	
Square edged on 3 edges	0.50
Rounded on 3 edges to radius of 1/12 barrel dim. or beveled edges on 3 sides	0.20
Wingwalls at 30º to 75º to barrel	
Square edged at crown	0.40
Crown edge rounded to radius of 1/12 barrel dimension or beveled top edge	0.20
Wingwalls at 10º to 25º to barrel - square edged at crown	0.50
Wingwalls parallel (extension of sides) - square edged at crown	0.70
Side or slope-tapered inlet	0.20

Note: When 50 percent or more of the discharge enters the structure from the surface, “k” shall be 1.0.

C. Culverts: Classified as having either entrance or outlet control. Either the inlet opening (entrance control), or friction loss within the culvert or backwater from the downstream system (outlet control) will control the discharge capacity.

1. Entrance Control: Entrance control occurs when the culvert is hydraulically short (when the culvert is not flowing full) and steep. Flow at the entrance would be critical as the water falls over the brink. If the tailwater covers the culvert completely (i.e., a submerged exit), the culvert will be full at that point, even though the inlet control forces the culvert to be only partially full at the inlet. The transition from partially full to full occurs in a hydraulic jump, the location of which depends on the flow resistance and water levels. If the flow resistance is very high, or if the headwater and tailwater levels are high

enough, the jump will occur close to or at the entrance. Design variables for culverts operating under entrance control shall be determined from Figures 5603-1 through 5603-7.

2. Outlet Control: If the flow in a culvert is full for its entire length, then the flow is said to be under outlet control. The discharge will be a function of the differences in tailwater and headwater levels, as well as the flow resistance along the barrel length. Design variables for culverts operating under outlet control shall be determined from Figures 5603-8 through 5603-14.

   Alternatively, refer to the Federal Highway Administration website for these charts (www.fhwa.dot.gov/bridge/hec05.pdf). Download applicable design manuals, reports, and FHWA hydraulics engineering such as Bridge Waterways Analysis Model (WSPRO), FHWA Culvert Analysis, and HDS 5 Hydraulic Design of Highway Culverts fromwww.fhwa.dot.gov/bridge/hydsoft.htm. These are applicable when flow in the upstream channel is subcritical.

D. Open Channels/Bridges: Proper evaluation of the velocity, depth, and width of flow requires analyses of the structures and conditions that impact the flow. Boundary flow conditions upstream and downstream from the open channel system must be established. The standard-step backwater method, using the energy equation, can be used to determine the depth, velocity, and width of flow. Major stream obstructions, changes in slope, changes in cross-section, and other flow controls can cause significant energy loss. In these cases, the energy equation does not apply and the momentum equation must be used to determine the depth, velocity, and width of flow.

   Hydraulic calculations for open channels may also be made by the U.S. Army Corps of Engineer's 'HEC-2 Water Surface Profiles' or 'HEC-RAS River Analysis System' computer programs. The HEC-2 program computes water surface profiles for one-dimensional steady, gradually varied flow in rivers of any cross section. HEC-RAS is an integrated system of software, designed for interactive use in a multi-tasking, multi-user network environment. The system has separate hydraulic analysis components, data storage and management capabilities, graphics and reporting facilities. The HEC-RAS system is intended for calculating water surface profiles for steady and unsteady gradually varied flow. The system can handle a full network of channels, a dendritic system, or a single river reach. Like HEC-2, HEC-RAS is capable of modeling subcritical, supercritical, and mixed flow regime water surface profiles. (www.hec.usace.army.mil).

5603.2 Analysis of Systems by Computer Models

The following list provides the commonly used computer programs for analyzing specific hydraulic systems. This is not an exhaustive list and alternates may be used with approval by the City/County Engineer.

A. Enclosed Pipe Systems in Gravity Flow

- SWMM Transport (EPA)
- HYDRA (FHWA)
- StormCad (Bentley)
- DR3M (USGS)

B. Enclosed Pipe Systems in Pressure Flow

- SWMM EXTRAN (EPA)
- MOUSE (DHI)
- HYDRA (FHWA)
- StormCad (Bentry)

C. Culverts

- HY8 (FHWA)
- WSPRO (USGS)
- CulvertMaster (Bentley)

D. Open Channels and Culverts/Bridges:

- HEC-2 (USACE)
- HEC-RAS (USACE)
- WSPRO (USGS)
- HYCHL (FHWA)
- SWMM Transport and EXTRAN (EPA)
- DR3M (USGS)

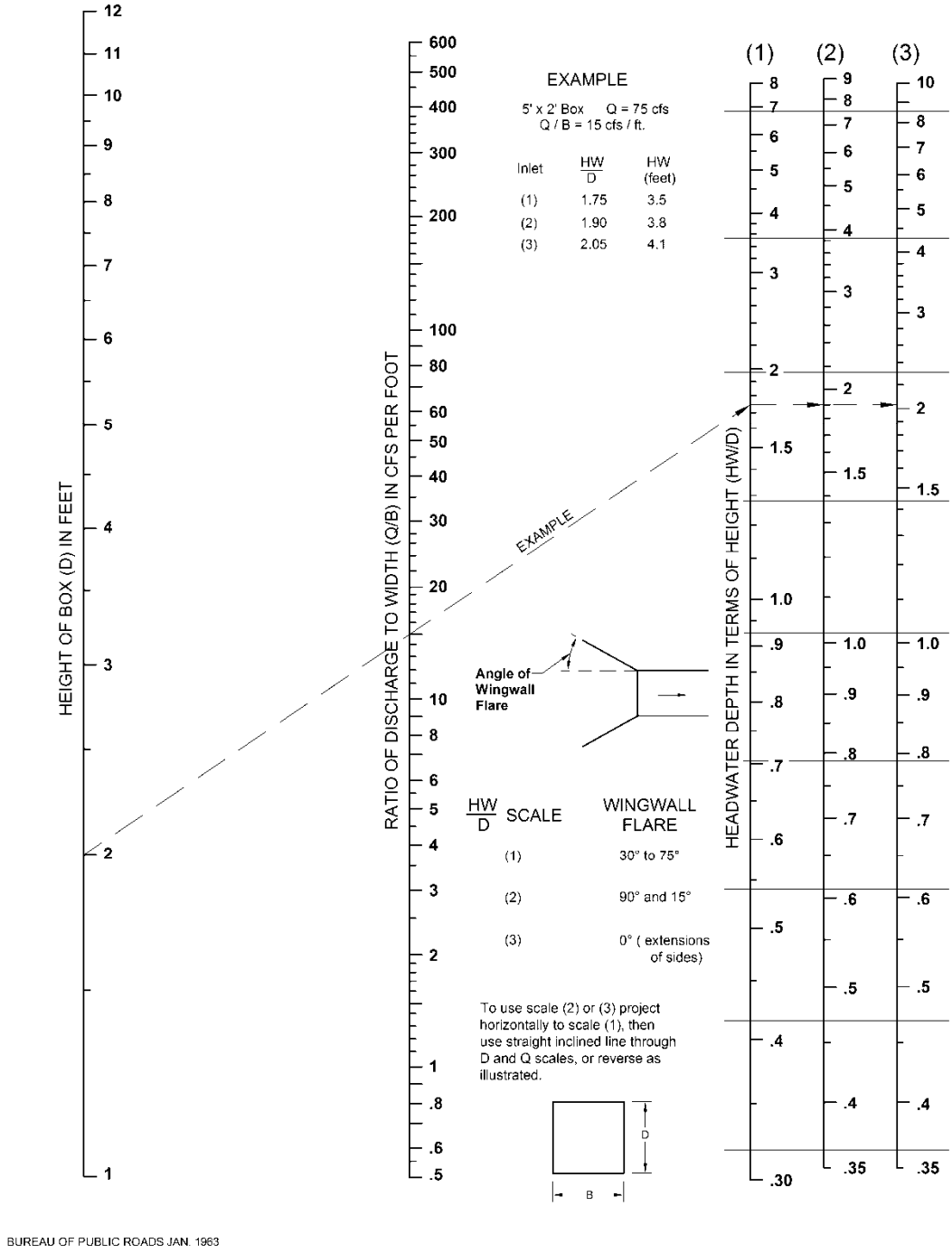

Figure 5603-1: Headwater Depth for Box Culverts with Inlet Control

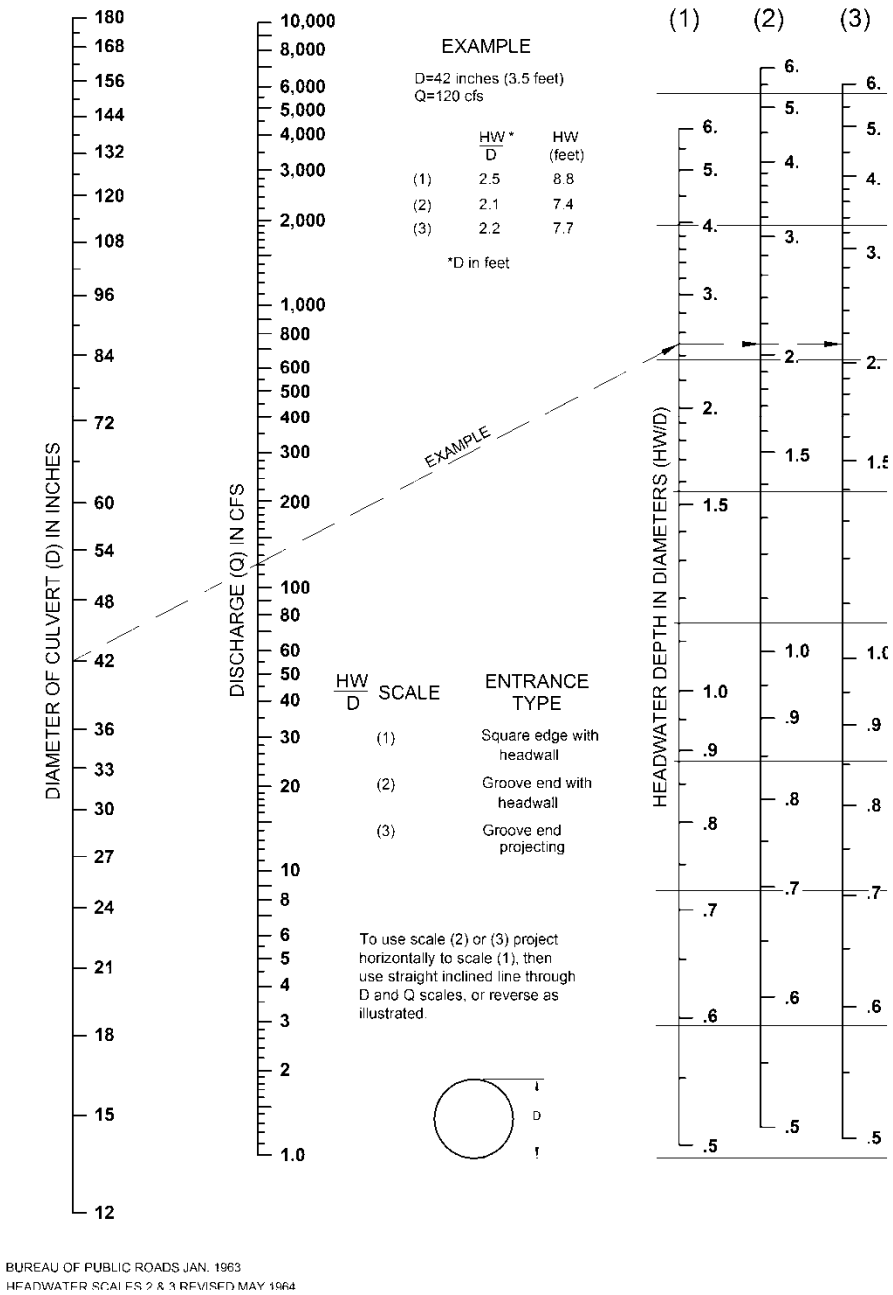

Figure 5603-2: Headwater Depth for Concrete Pipe Culverts with Inlet Control

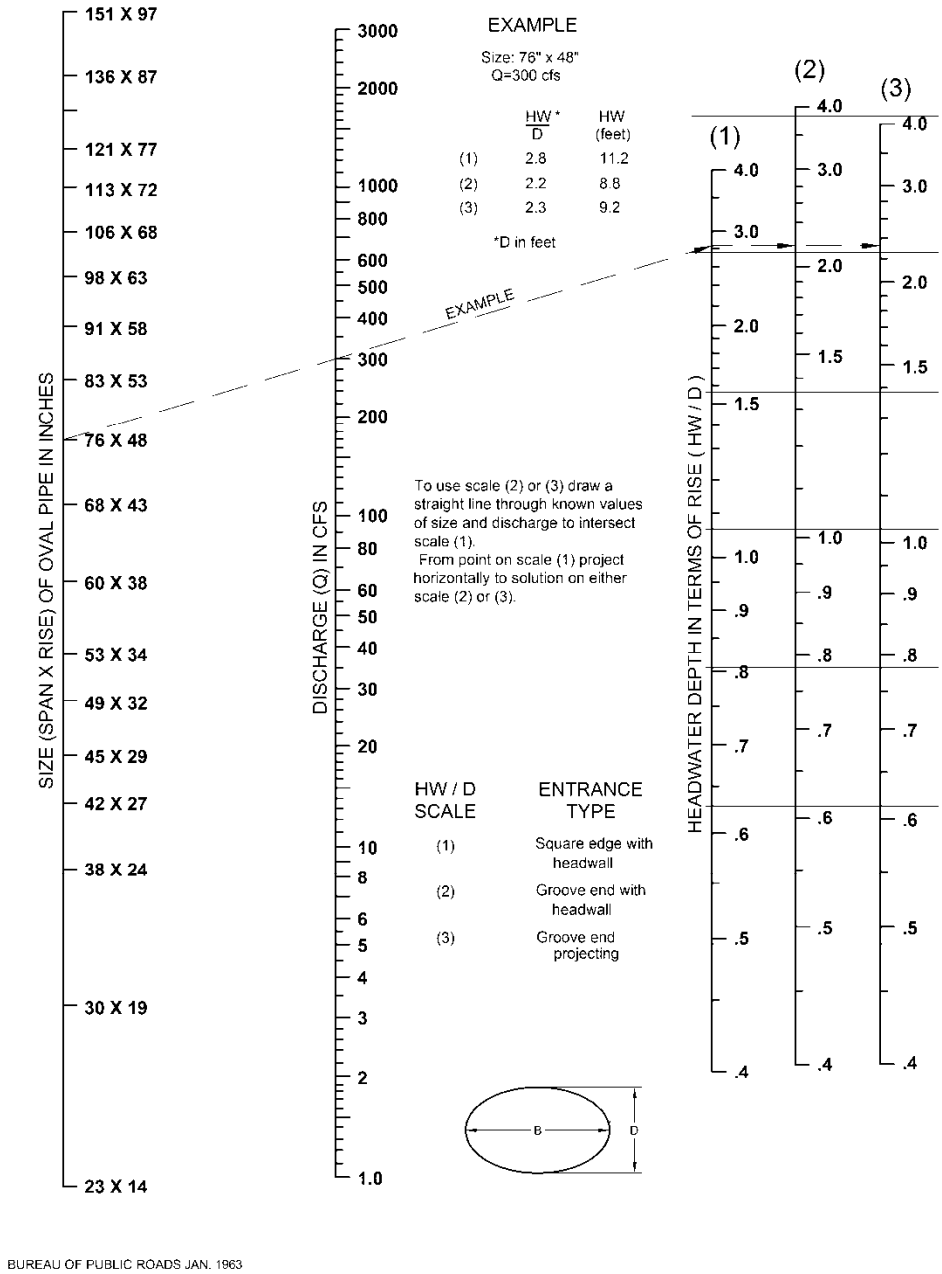

Figure 5603-3: Headwater Depth for Oval Concrete Pipe Culverts, Long Axis Horizontal with Inlet Control

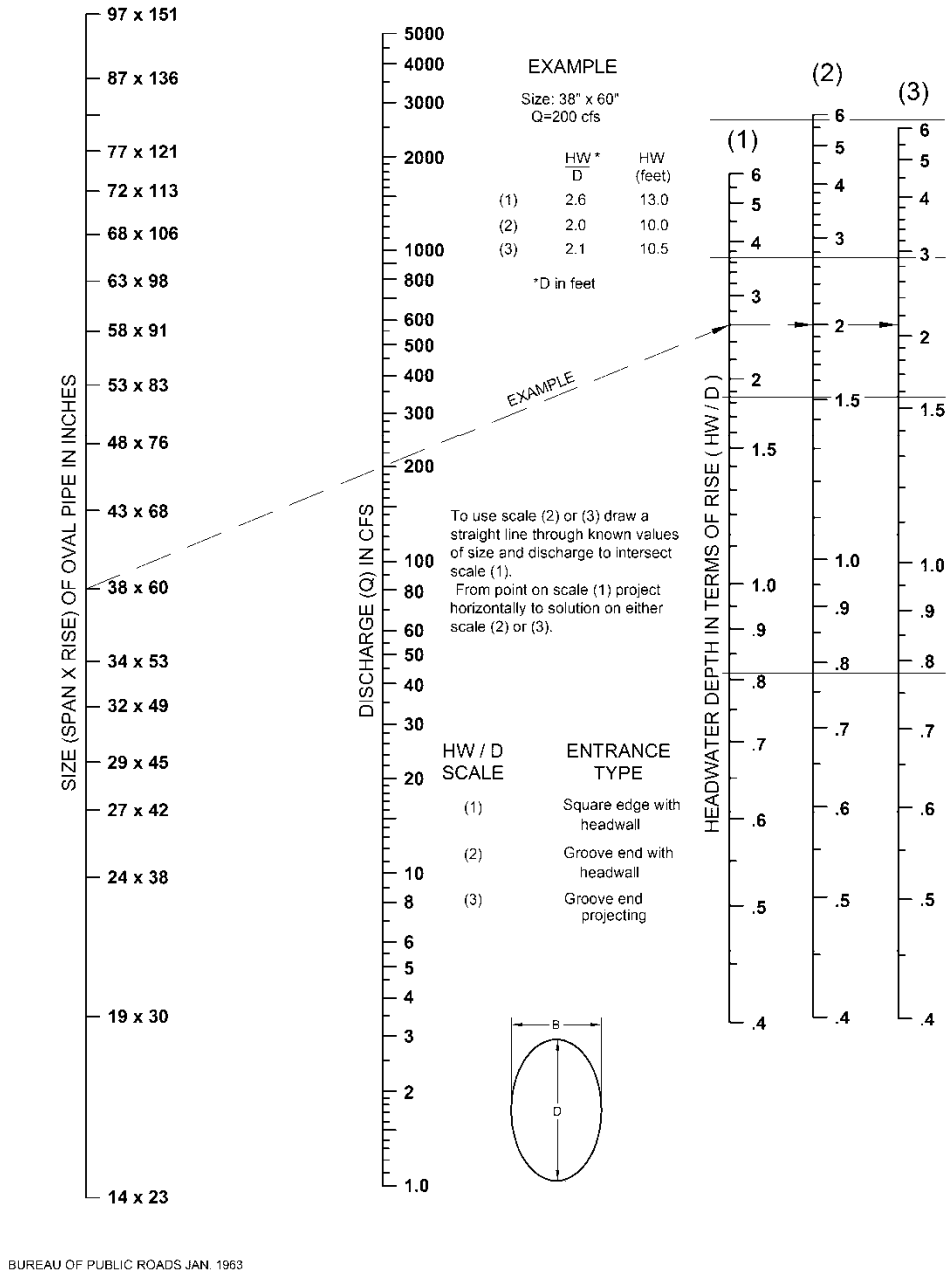

Figure 5603-4: Headwater Depth for Oval Concrete Pipe Culverts, Long Axis Vertical with Inlet Control

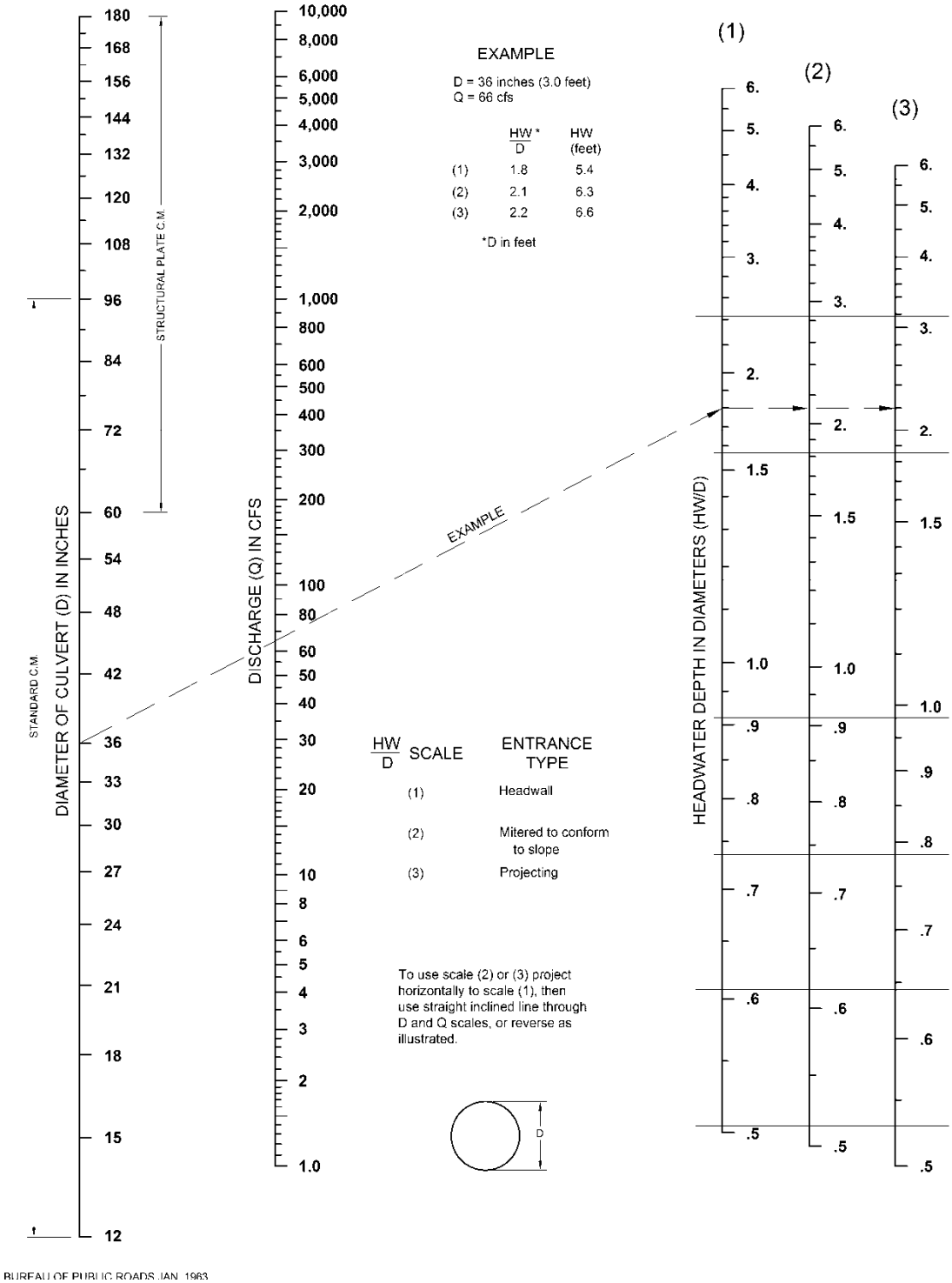

Figure 5603-5: Headwater Depth for Corrugated Metal Pipe Culverts with Inlet Control

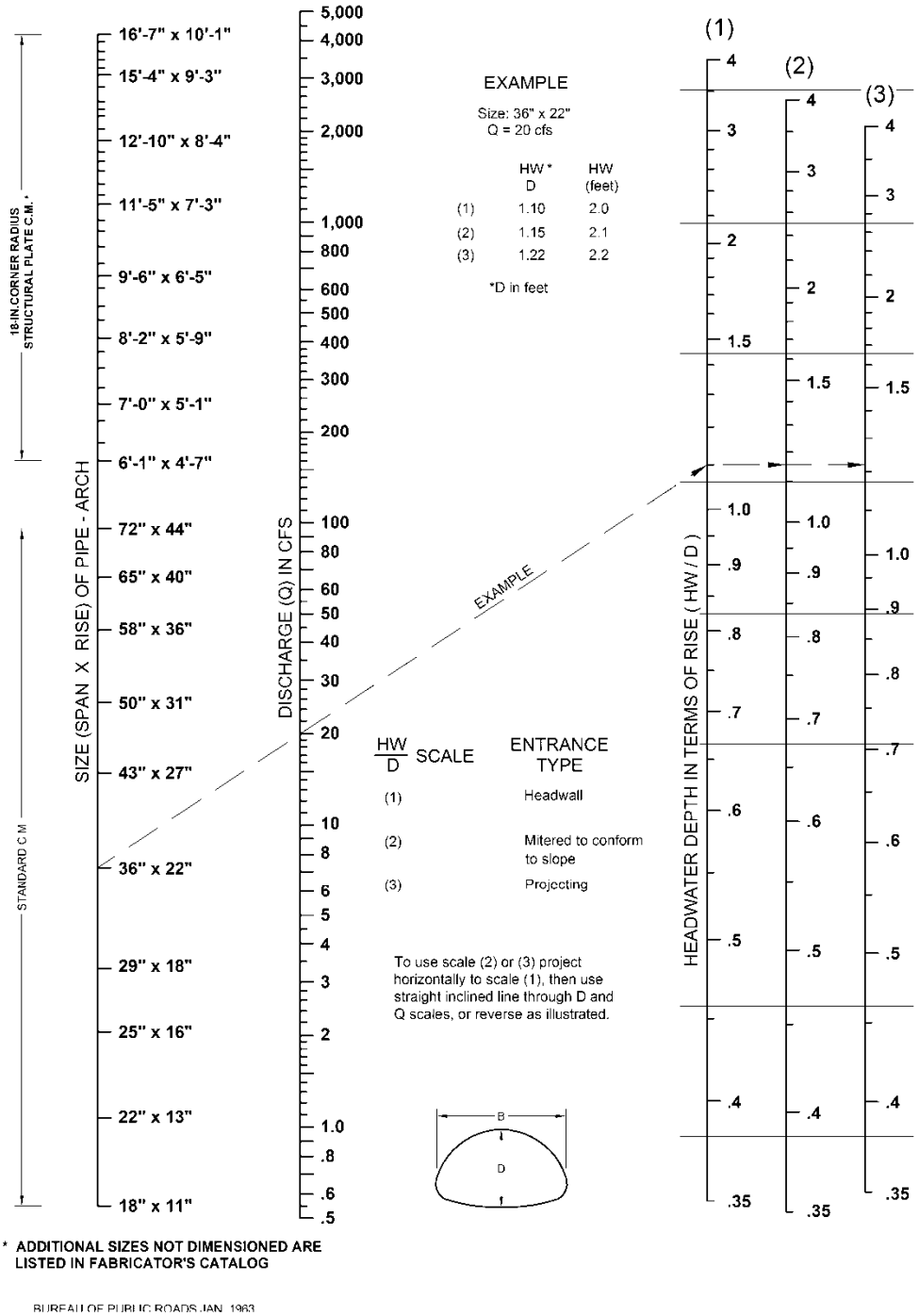

Figure 5603-6: Headwater Depth for Corrugate Metal Pipe – Arch Culvert with Inlet Control

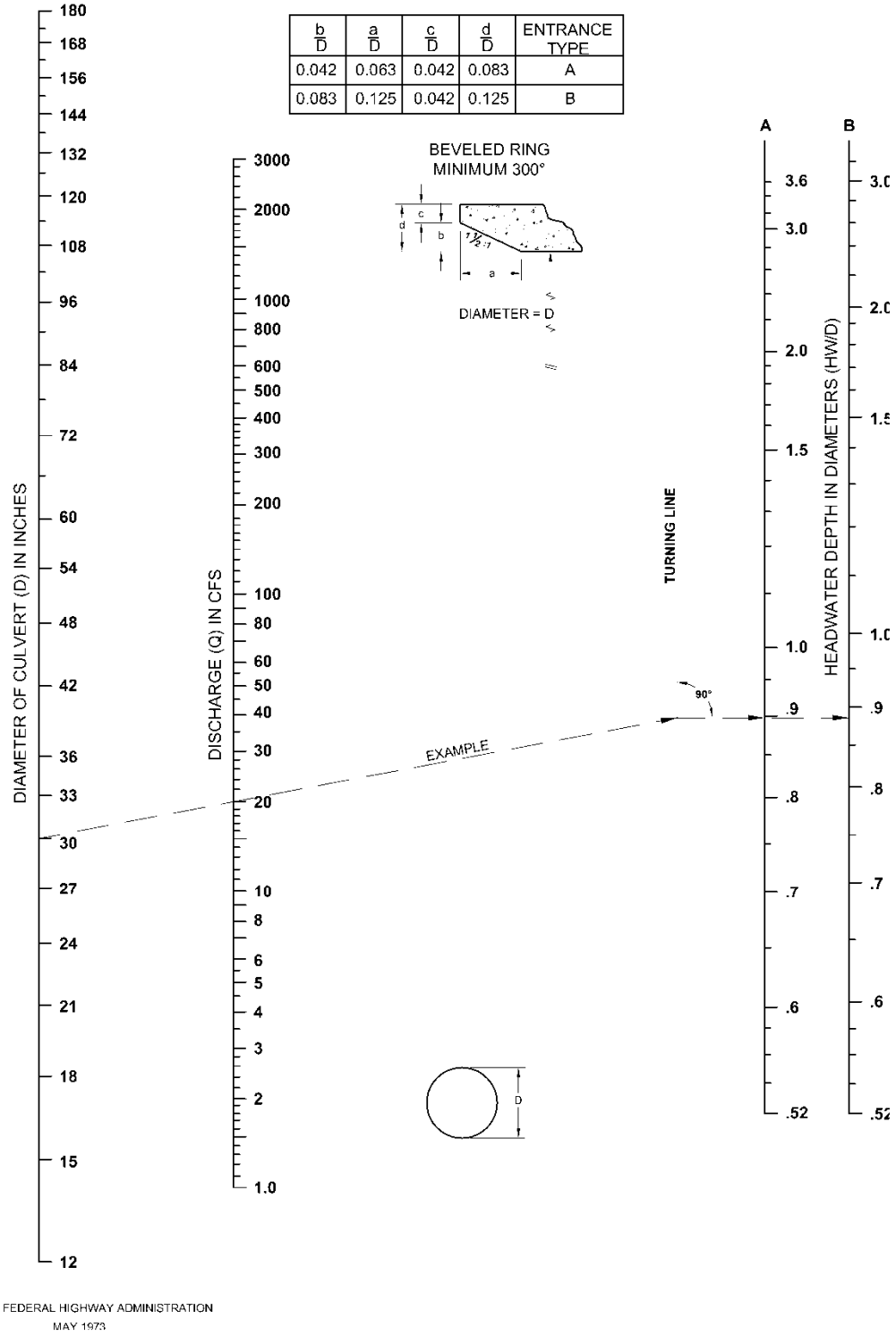

Figure 5603-7: Headwater Depth for Circular Pipe Culverts with Beveled Ring Inlet Control

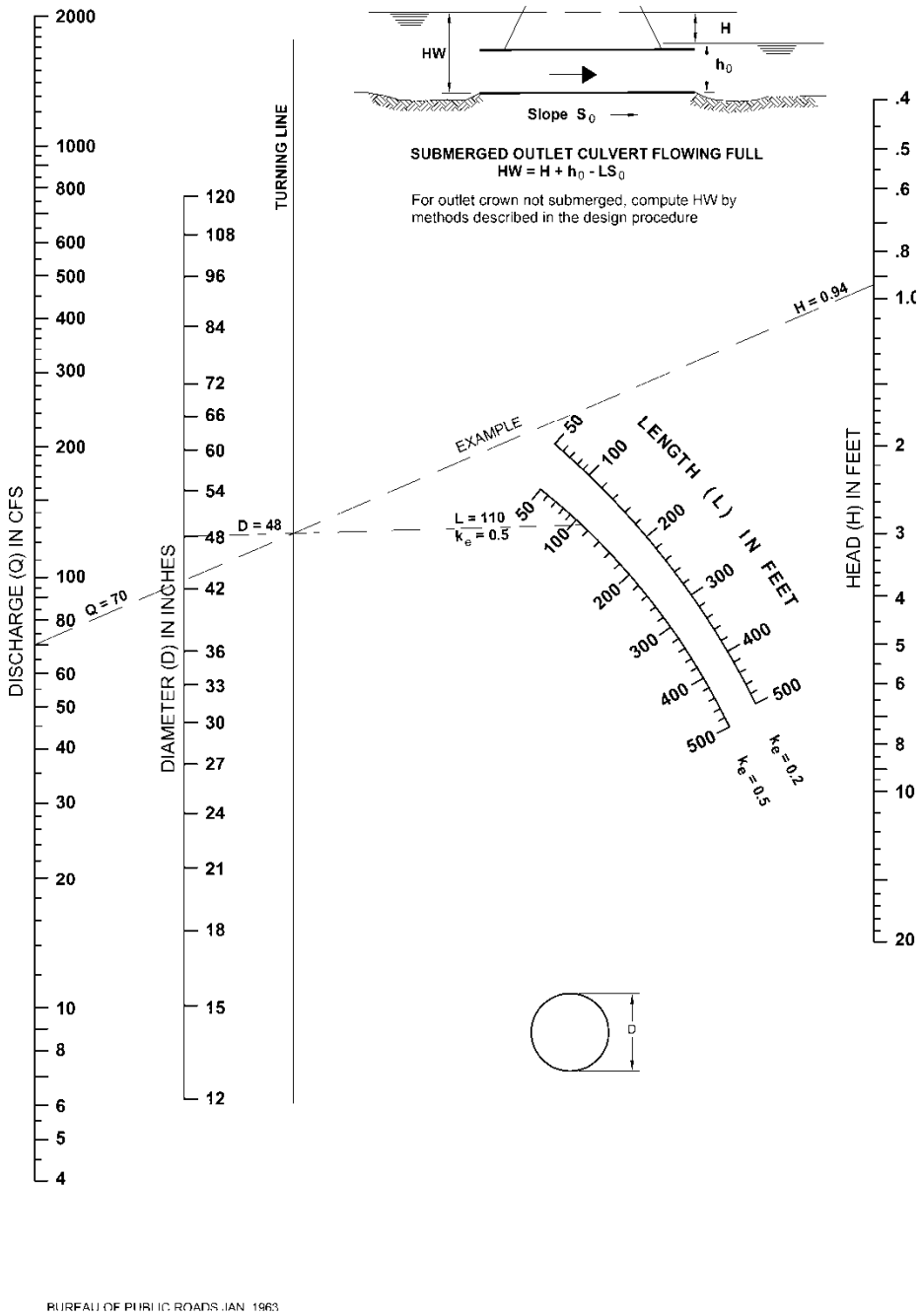

Figure 5603-8: Head for Concrete Pipe Culverts Flowing Full (n=0.12)

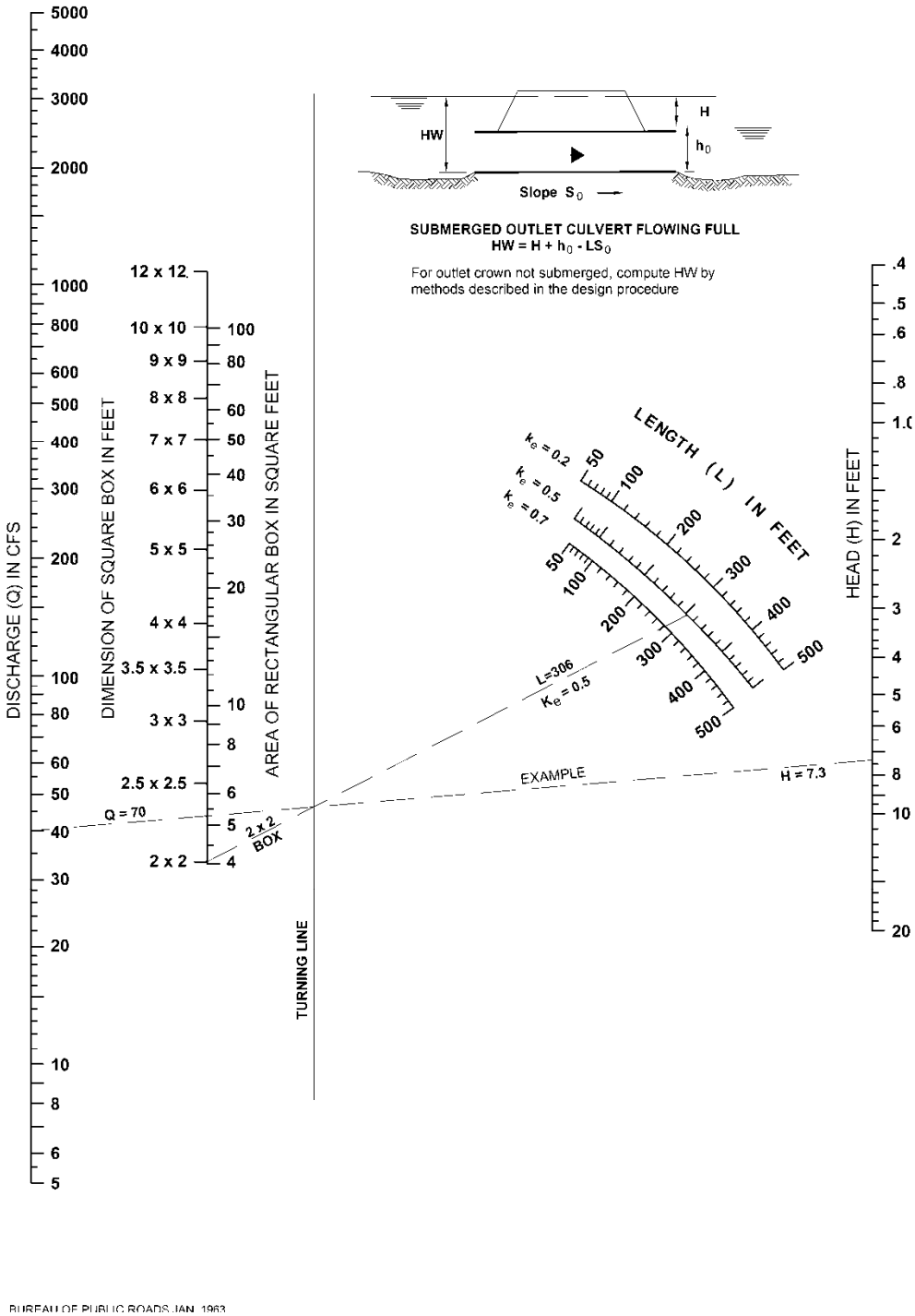

Figure 5603-9: Head for Concrete Box Culverts Flowing Full (n=0.012)

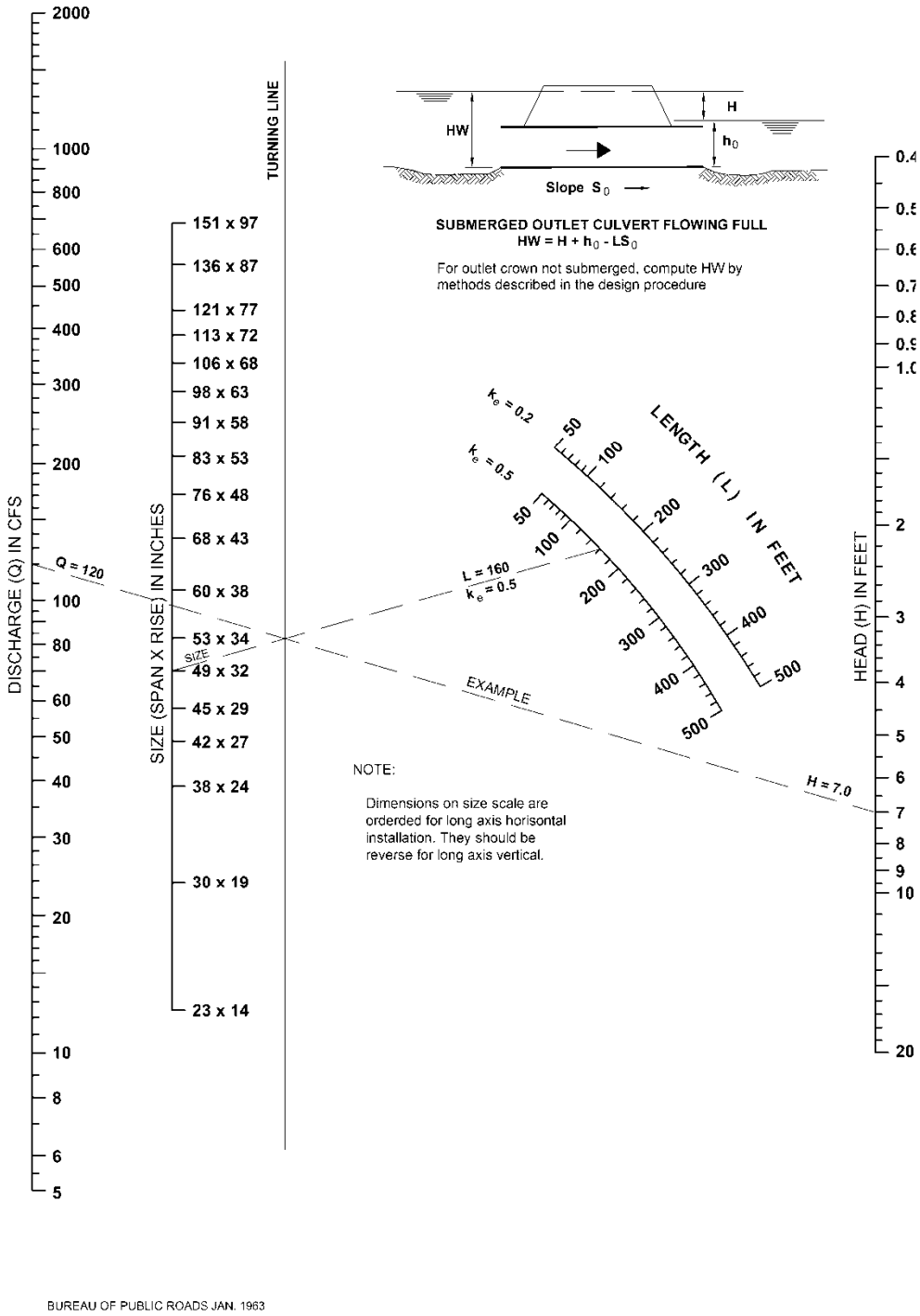

Figure 5603-10: Head for Oval Concrete Pipe Culverts, Long Axis Horizontal or Vertical Flowing Full (n=0.12)

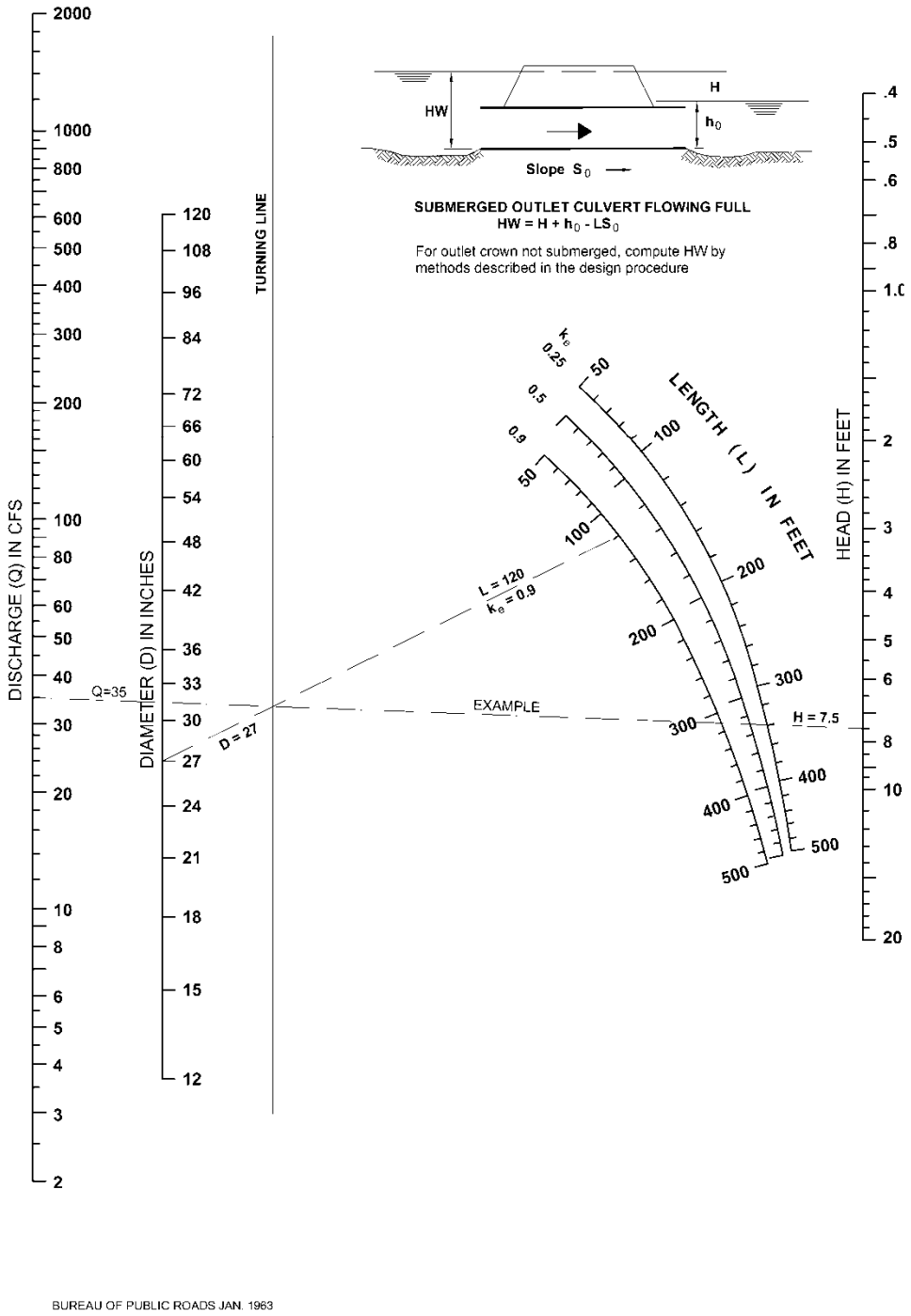

Figure 5603-11: Head for Standard Corrugate Metal Pipe Culverts Flowing Full (n=0.024)

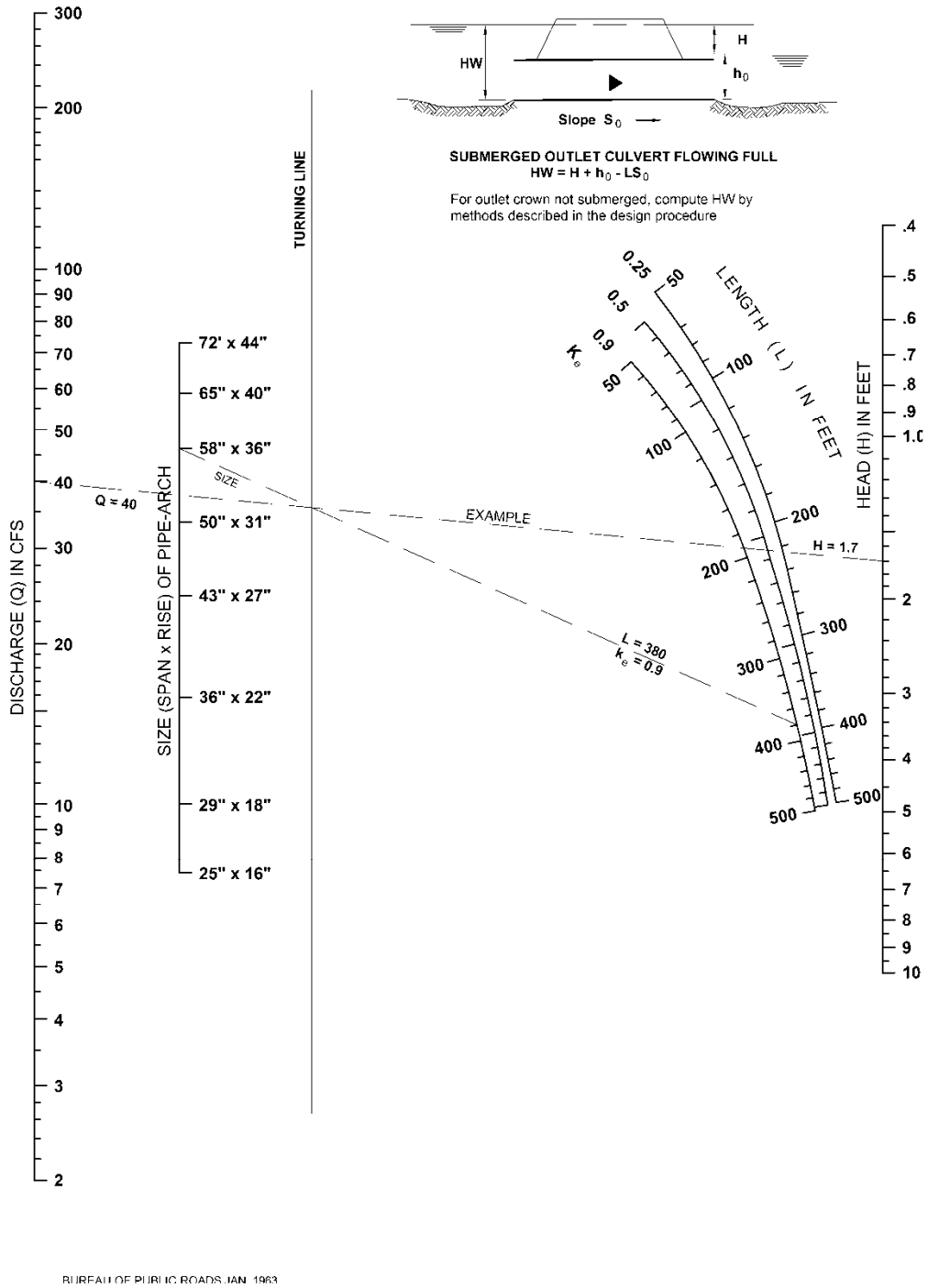

Figure 5603-12: Head for Standard Corrugated Metal Pipe-Arch Culverts Flowing Full (n=0.024)

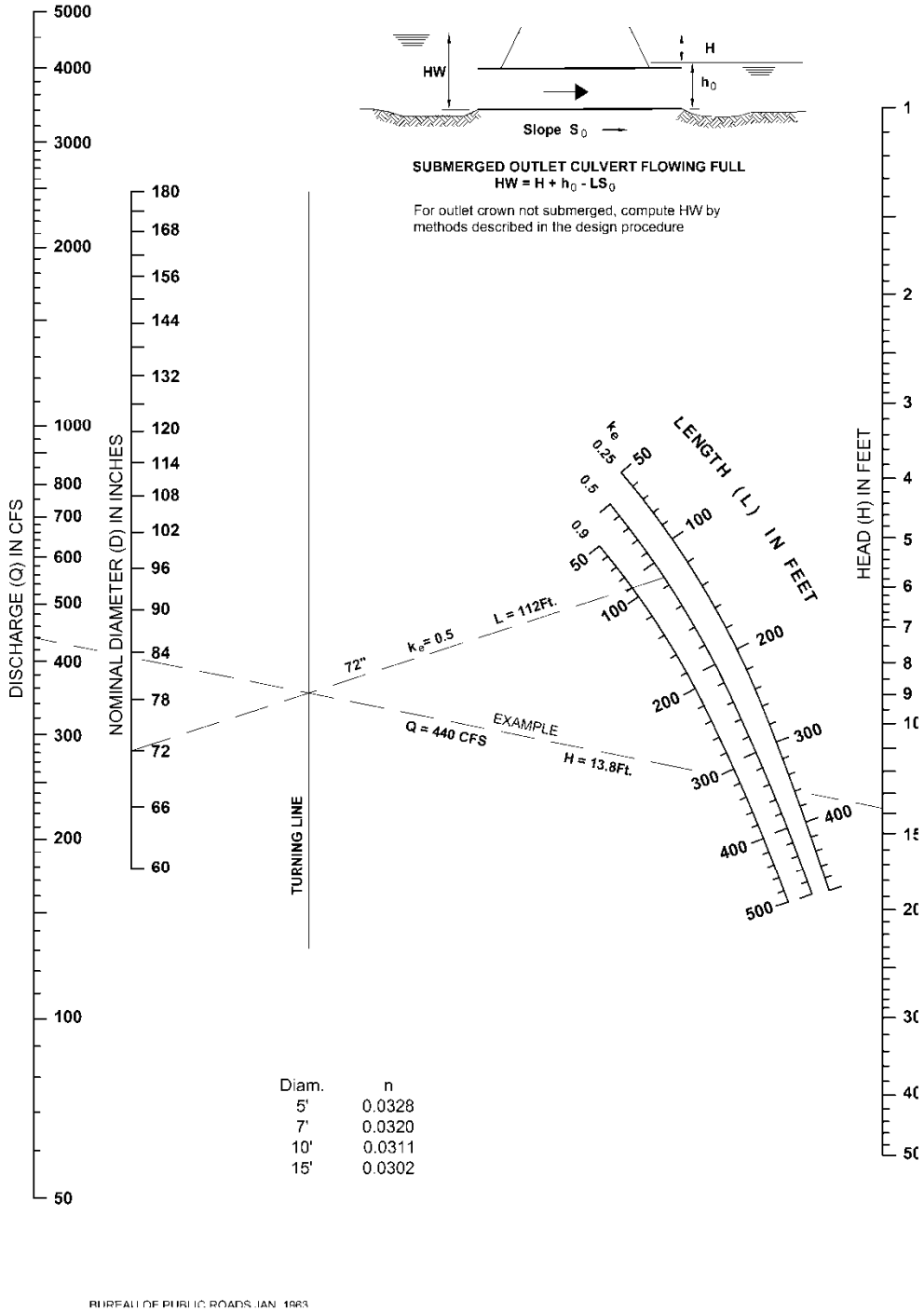

Figure 5603-13: Head for Structural Plate Corrugated Metal Pipe Culverts Flowing Full (n=0.0328 to 0.0302)

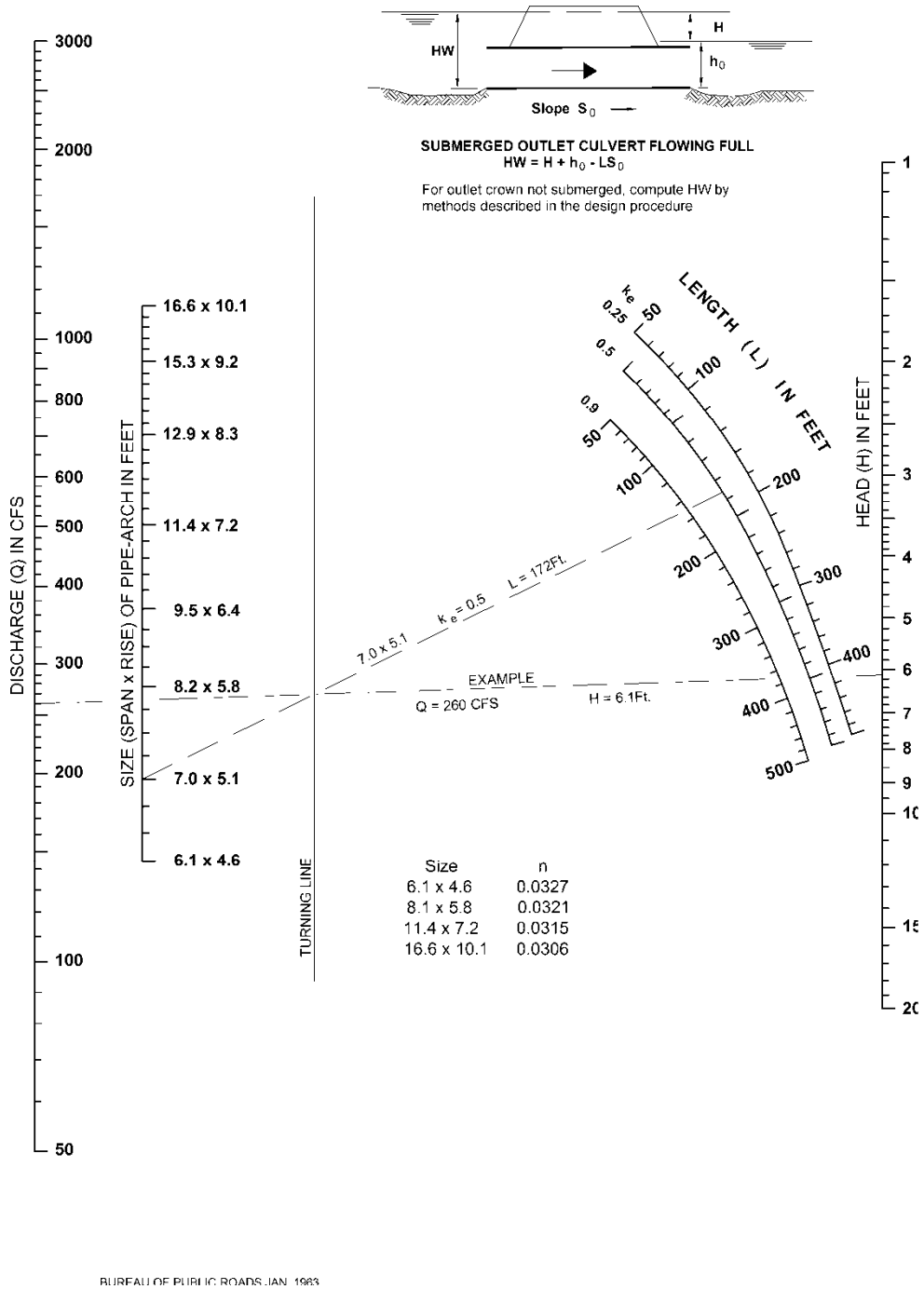

Figure 5603-14: Head for Structural Plate Corrugated Metal Pipe Arch Culverts, 18 inch Corner Radius, Flowing Full (n=0.0328 to 0.0302)

SECTION 5604 INLETS, MANHOLES AND JUNCTION BOXES

5604.1 Inlet Design

A. Type: Only curb opening inlets shall be used on public streets, except as approved by the City/County Engineer.

B. Configuration: These minimum dimensions (shown in Table 5604-1 and illustrated by Figure 5604-1) apply to either the lazy-back or steep-face type curbs:

Table 5604-1: Inlet Configuration Dimensions

Description	Dimension
Opening length, inside	4.0 ft (min)
Width, perpendicular to curb line, inside	3.0 ft (min)
Setback curb line to face	1.0 ft (min)
Opening, clear height	6.0 in. (min)
Gutter depression at inlet	6 ¼ in. (min)
Gutter transition length	
(a) Both sides in sump and upstream side on slopes	5.0 ft (min)
(b) Downstream on slopes	3.0 ft (min)

C. Design Method: Inlets should be designed using the methods prescribed in Section 5604.8 and/or Figures 5604-2 through 5604-19. Note that the Theoretical Captured Discharge (right side of chart) is the design capacity, 80 percent clogging factor should not be used for inlets on grade, unless deemed necessary by the engineer. Figures 5604-2 through 5604-19 describe inlet efficiency as a function of street slope (See Figure 5604-3 for design example) and in most cases will require the designer to add bypassed flow to the next downstream inlet. Figure 5604-21 describes inlet capacity for sump regions using HEC-22 equation 4-31a. Inlet capacity for sump regions shall be rated at 80 percent of the theoretical capacity to allow for partial obstruction and clogging. “Type CG-2 Curb” and Type CG-1 Curb”, as indicated on these figures, refers to the lazy-back and steep-face style curbs, respectively.

5604.2 Gutter Flow

Inlets shall be located to limit the width of flow in street gutters at the time of peak discharge for the design storm specified in 5601.8 B to the limits indicated in Table 5604-2.

Table 5604-2: Gutter Spread Criteria

Back to Back of Curb Street Width (feet)	Maximum Allowable Spread in Each Outside Curb Lane from Back of Curb* (feet)
28 or Less	12.0
Over 28 to 36	12.0
Over 36	12.0
Divided Roadways	As above for each direction roadway

* spread may exceed these limits within 50 feet of a sump inlet.

In addition to the inlet spacing requirements for limiting width of flow, inlets shall be locate to limit gutter flow from crossing the street centerline at the time of peak discharge for the design storm to the limits shown in Table 5604-3.

Table 5604-3: Inlet Bypass Spread Criteria

Condition Causing Flow Crossing Street Centerline	Maximum Discharge (cfs)
Sump at intersection return*	1.0
Transitions to superelevation	1.0
Sump at midblock	Not Allowed
Overflow of non-gutter flow	Per 5601.8.B

* For new development, inlets at intersections shall be positioned outside the curb return.

5604.3 Gutter Capacity

Izzard's Formula shall be used to determine gutter capacity (see Figure 5604-20 for graphical solution):

$$Q = \frac{0.56z \cdot S^{1/2} \cdot D^{8/3}}{n}$$

Where:

Q = The gutter capacity in cubic feet per second

z = The reciprocal of the average cross-slope, including gutter section, in feet per foot

S = The longitudinal street grade in feet per foot

D = The depth of flow at curb face in feet

n = Manning's "n" (see Table 5603-1)

5604.4 Freeboard Requirements

Any opening which surface water is intended to enter (or may backflow from) the system shall be 0.5 feet or more above the hydraulic grade line in the inlet during the design storm, specified in Section 5601.8, where such calculation must include minor losses.

5604.5 Inverts and Pipes

The crown(s) of pipe(s) entering a drainage structure shall be at or above the crown of the pipe exiting from the structure and provide a minimum fall of the invert in the structure of 0.2 feet for straight flow through the structure or 0.5 feet fall for all other types of flow (bends more than 22.5 deflection angle, multiple lines entering, enlargement transition, etc.) through the structure. The desirable minimum fall across the invert is 0.5 feet. Alternatively, the crowns of the pipes may be at or above the EGL of normal flow at design frequency.

The maximum spacing between manholes shall be 500 feet.

5604.6 Loading Conditions for Structures

Loading shall be in accordance with Section 5710.3.

5604.7 Street Grade on Vertical Curves

The following formula shall be used to determine the street grade (S_x) at any point on a vertical curve using plus for grades ascending forward and minus for grades descending forward, in feet per foot.

$$S_x = S_1 + \frac{x \cdot (S_2 - S_1)}{L}$$

Where:

S_x = the street grade on a vertical curve at point x, in feet per foot

S_1 = the street grade at the PC of a vertical curve, in feet per foot

S_2 = the street grade at the PT of a vertical curve, in feet per foot

x = the distance measured from the PC to point x on a vertical curve, in feet

L = the total length of a vertical curve, in feet

5604.8 Curb Inlet Intercept Equations[1]

A. For any given set of conditions (curb type, inlet length, street grade and cross-slope), the relationship between the captured discharge and the total discharge can be approximated satisfactorily by an equation

$$Q_c = \begin{cases} Q_t \quad for \quad Q_t \le Q_o \\ Q_o + (Q_a - Q_o)\left\{1 - \exp\left[-\left(\frac{Q_t - Q_o}{Q_a - Q_o}\right)\right]\right\} \; for \quad Q_t > Q_o \end{cases}$$

of the form:

Q_o and Q_a are constants. The constant Q_o represents the largest discharge that is captured completely, and the constant Q_a represents the upper limit on the captured discharge, which is approached asymptotically with increasing total discharge. For a particular curb type and street cross-slope, Q_o and Q_a vary with inlet length (L_o) and street grade (S_o) according to the formulas

$$Q_o = (a + b \cdot L_o)(S_o)^x$$

$$Q_a = (c + d \cdot L_o)(S_o)^x$$

Where a, b, c, d and x are constants. Table 5604-4 shows these constants in U.S. customary units.

Table 5604-4: Values of Coefficients and Exponent

Curb Type	Sx,%	a	b	c	d	x
CG-1 (B)	2	1.0	0	3.2	1.7	-0.5
CG-1 (B)	4	1.5	0.5	2.6	1.9	-0.5
CG-2 (A)	2	-0.4	0.1	3.5	0.8	-0.7
CG-2 (A)	4	-0.3	0.3	4.3	2.5	-0.8

B. Appendix A provides a Microsoft Visual Basic function that can be added to a Microsoft Excel (97 or later) worksheet or template for inlet intercept calculations.

[1] ."Hydraulic Performance of Set-Back Curb Inlets", McEnroe et al., University of Kansas, 1998.

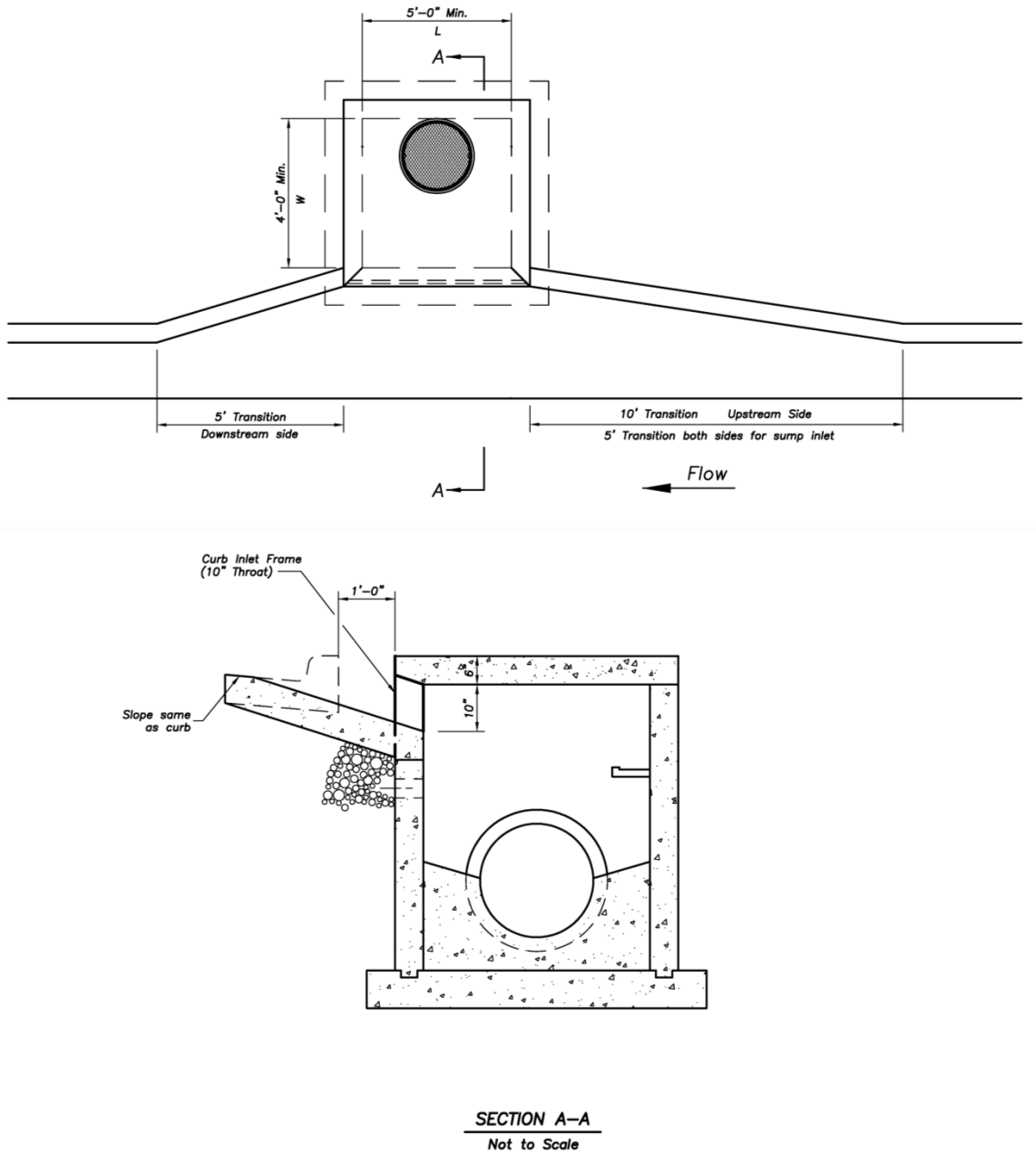

Figure 5604-1: Curb Inlet (10' Throat) Minimum Hydraulic Dimensions

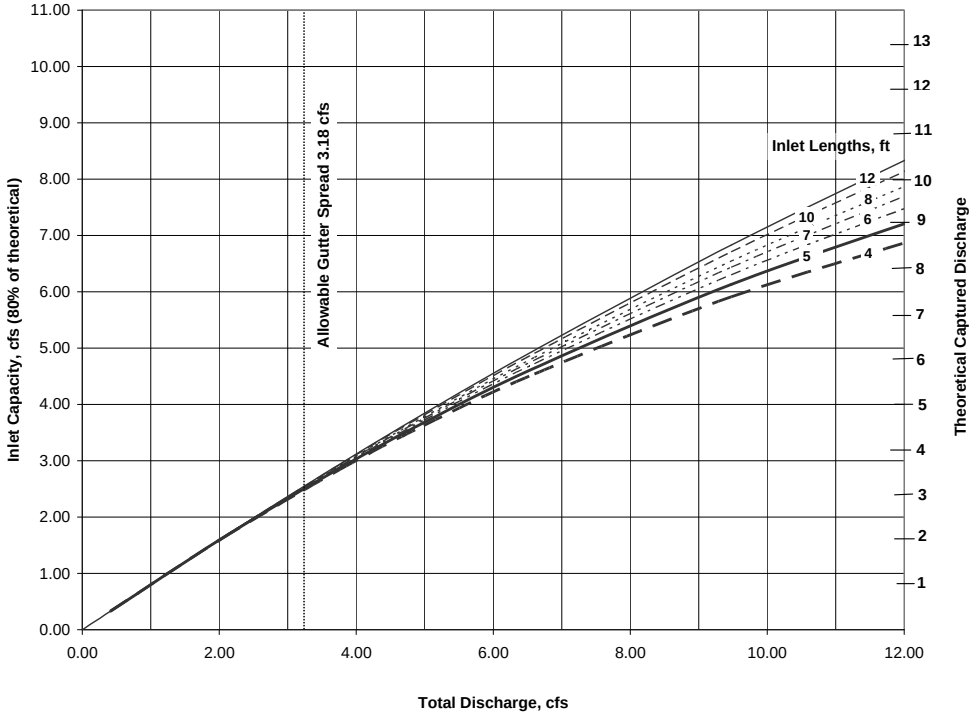

Figure 5604-2: Type CG-1 Curb, S_x=2%, S_o=0.5%

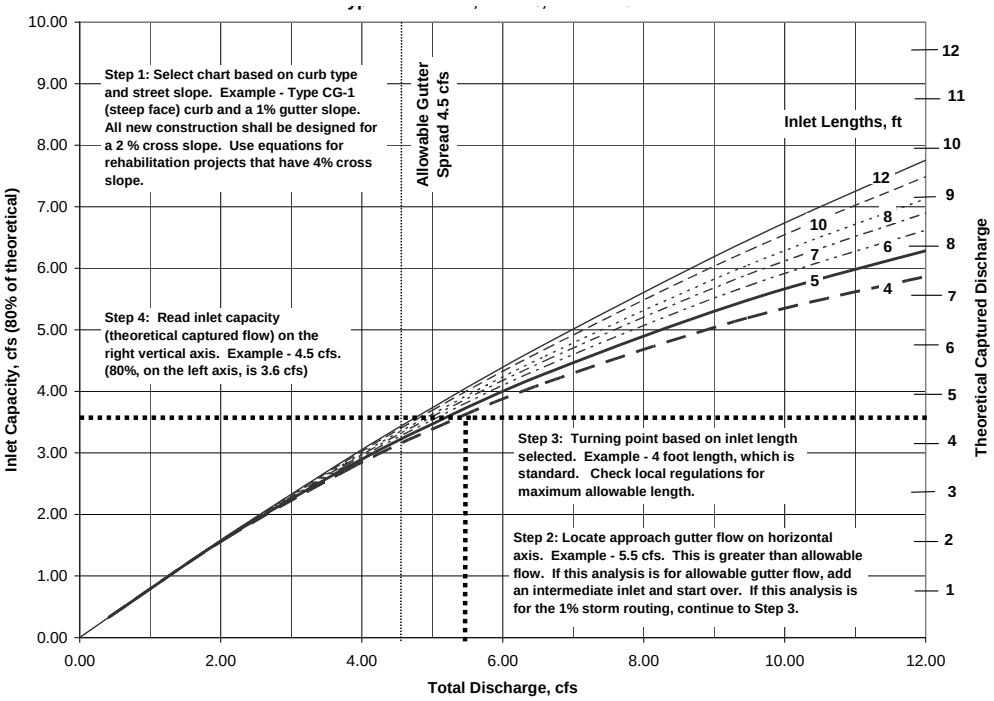

Figure 5604-3: Type CG-1 Curb, S_x=2%, S_o=1.0%

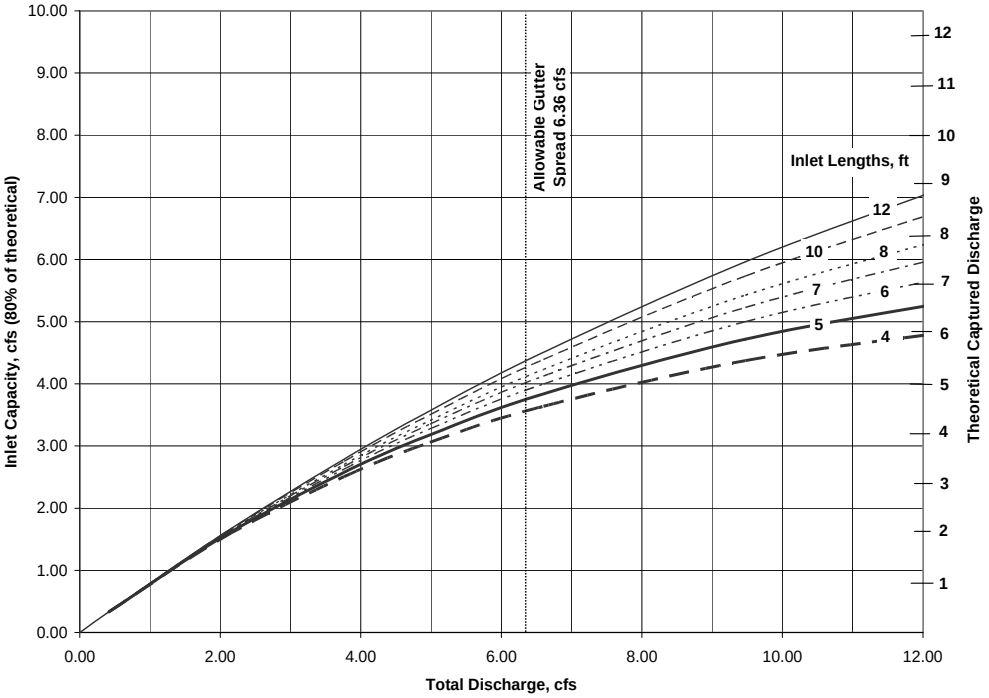

Figure 5604-4: Type CG-1 Curb, S_x=2%, S_o=2.0%

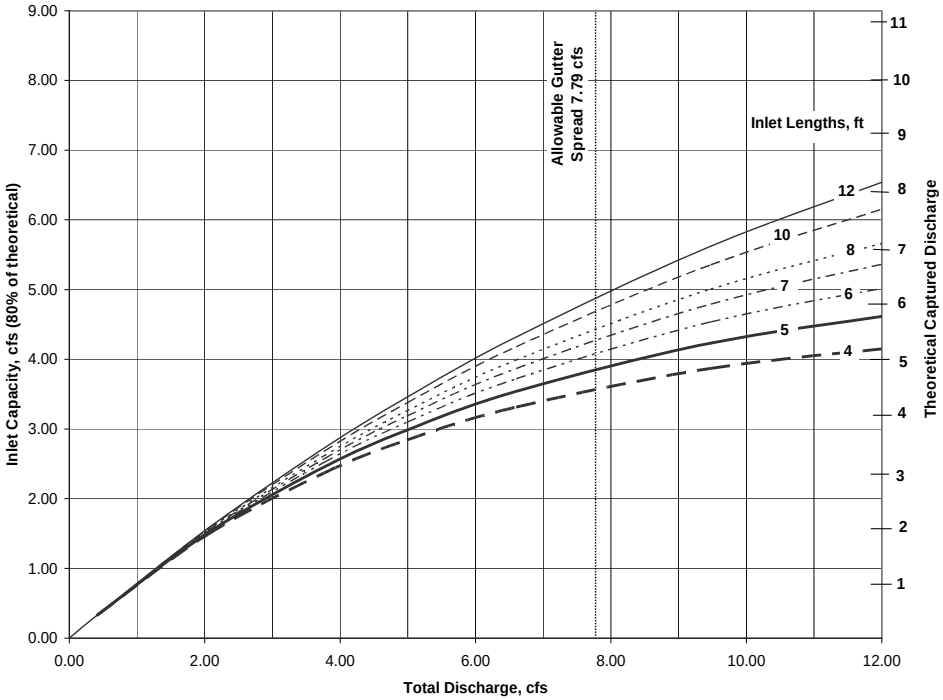

Figure 5604-5: Type CG-1 Curb, S_x=2%, S_o=3.0%

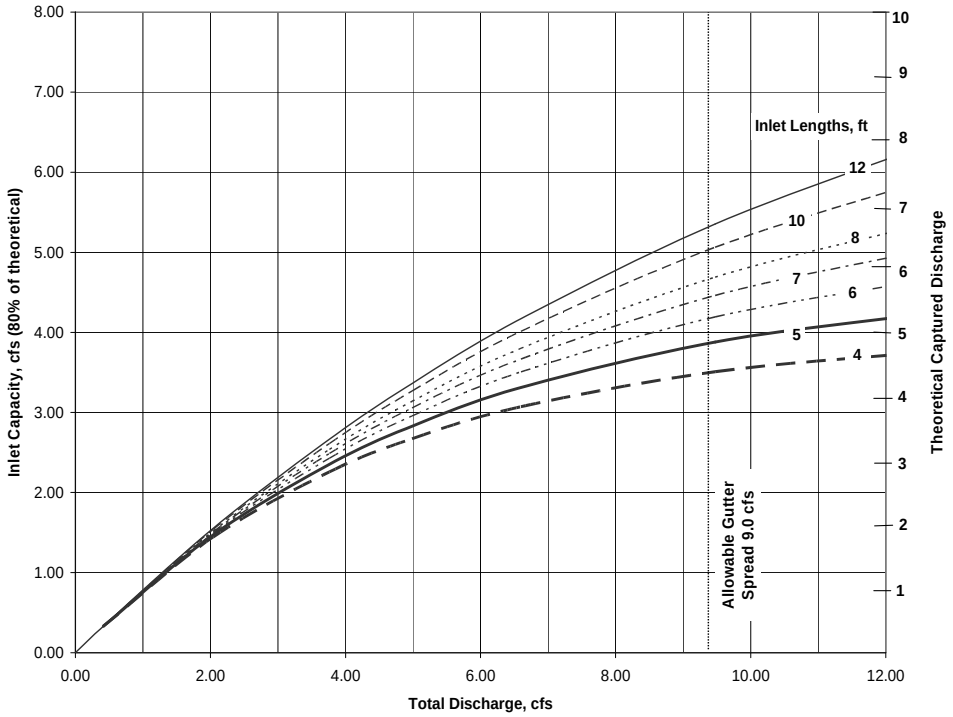

Figure 5604-6: Type CG-1 Curb, S_x=2%, S_o=4.0%

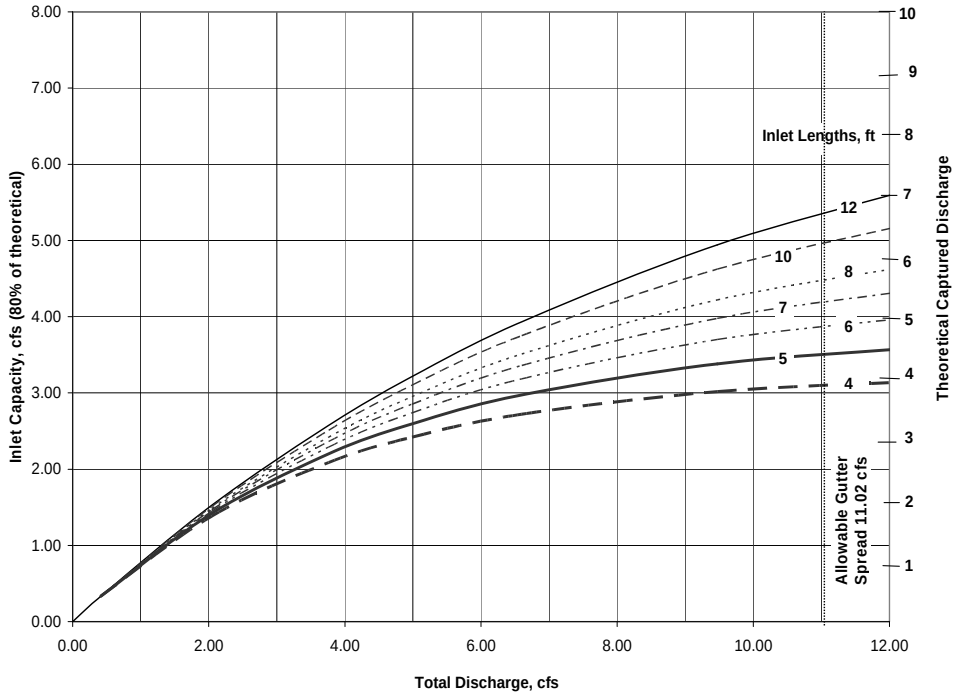

Figure 5604-7: Type CG-1 Curb, S_x=2%, S_o=6.0%

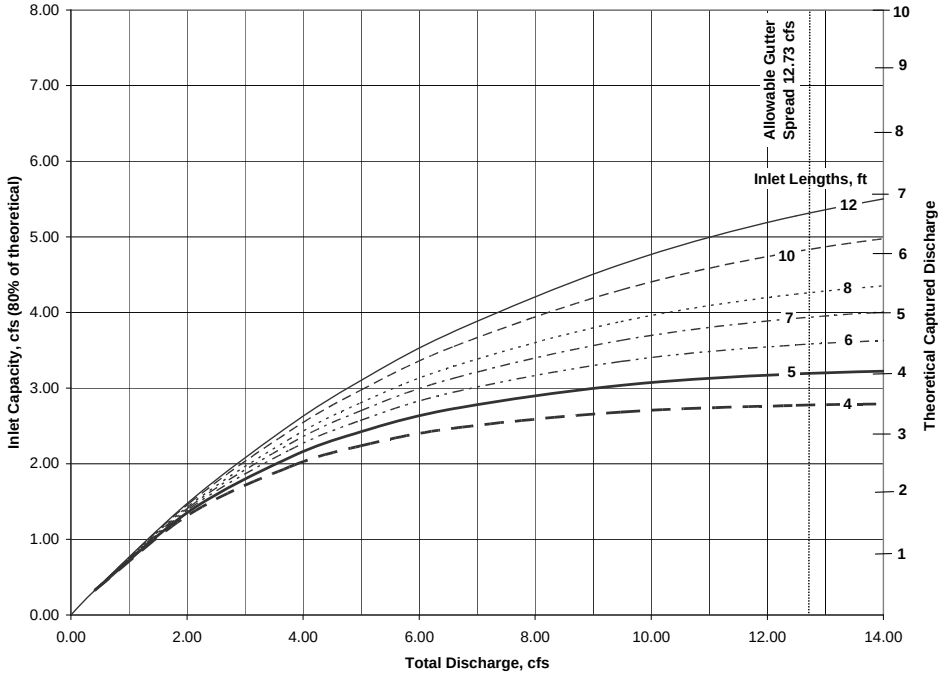

Figure 5604-9: Type CG-1 Curb, S_x=2%, S_o=8.0%

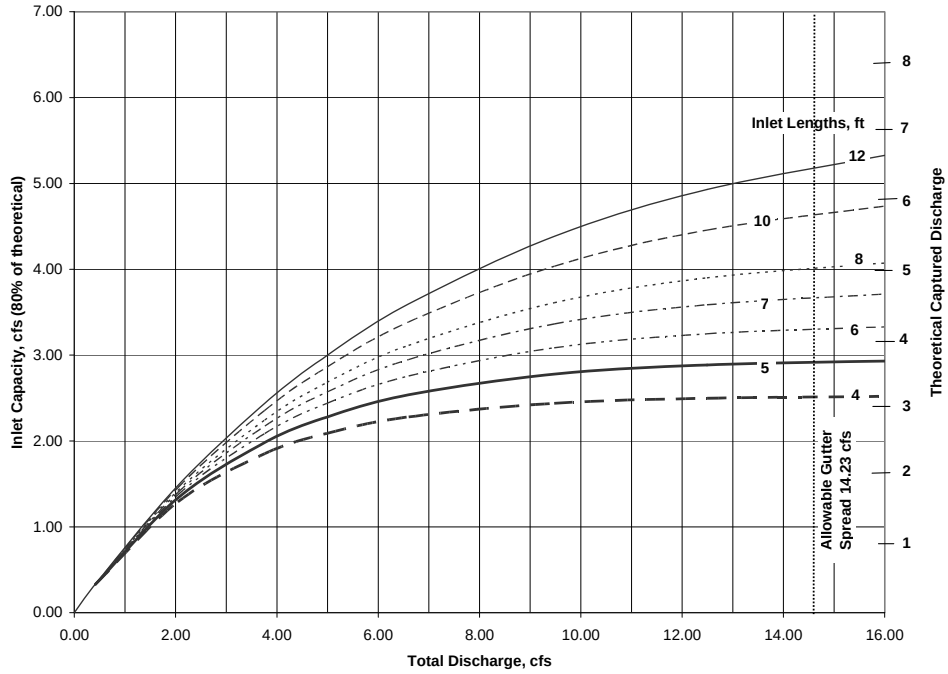

Figure 5604-8: Type CG-1 Curb, S_x=2%, S_o=10.0%

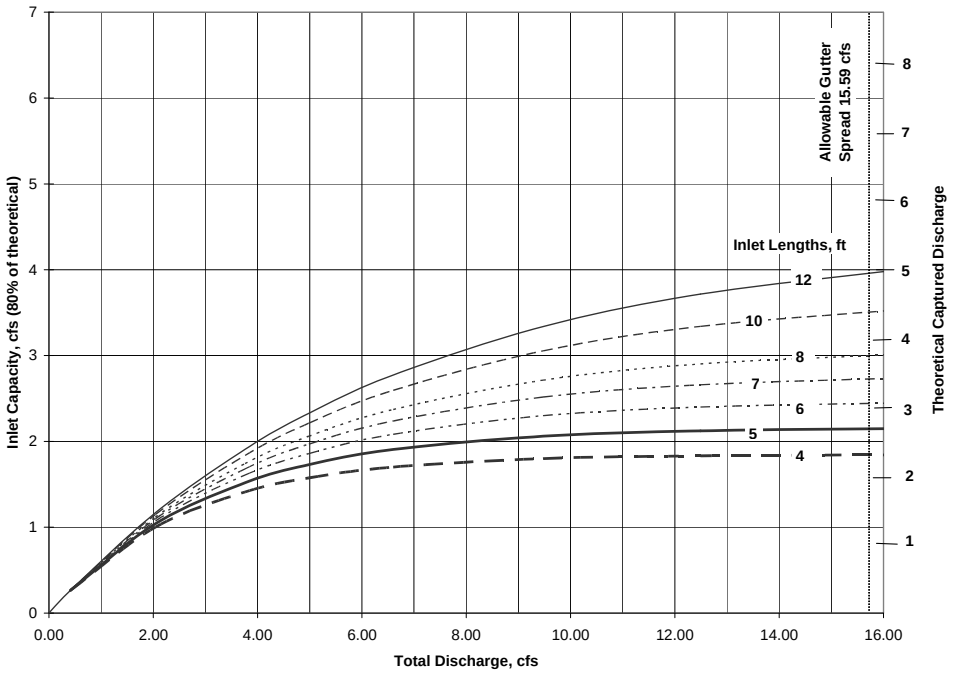

Figure 5604-10: Type CG-1 Curb, S_x=2%, S_o=12.0%

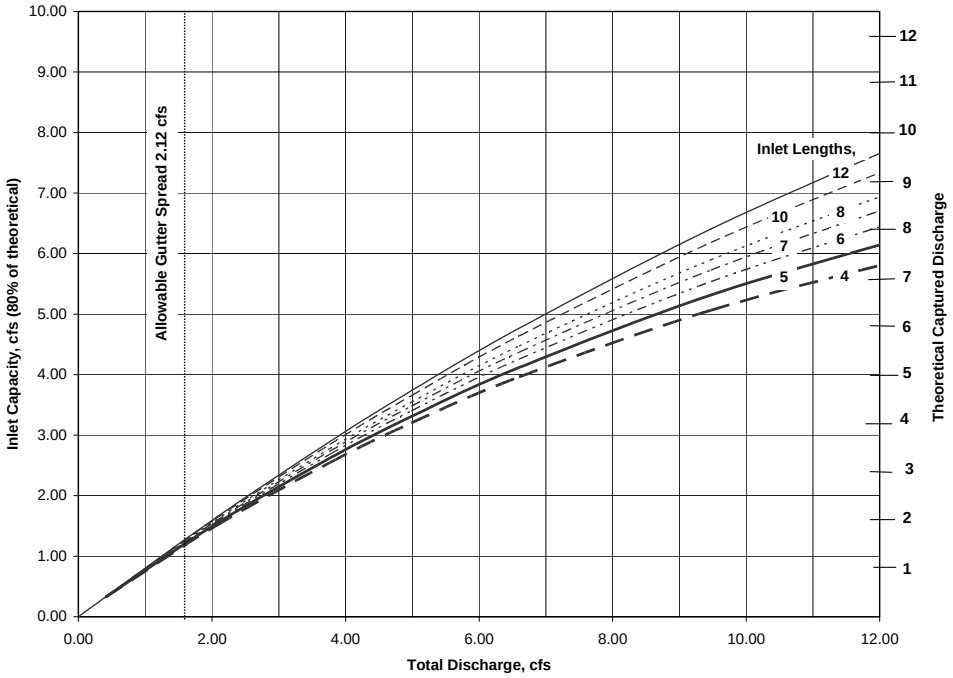

Figure 5604-11: Type CG-2 Curb, S_x=2%, S_o=0.5%

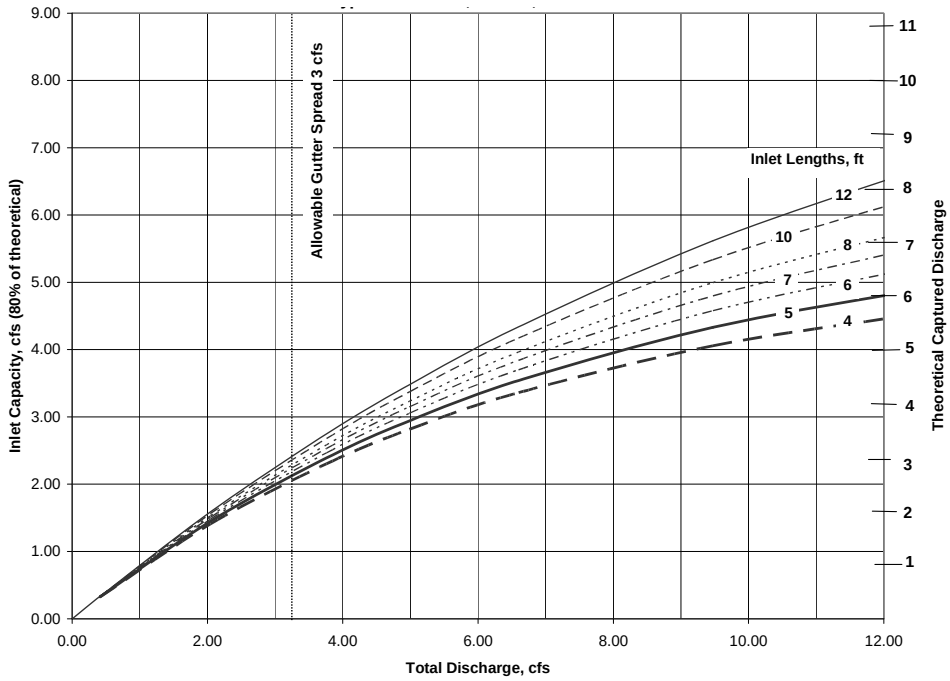

Figure 5604-12: Type CG-2 Curb, S_x=2%, S_o=1.0%

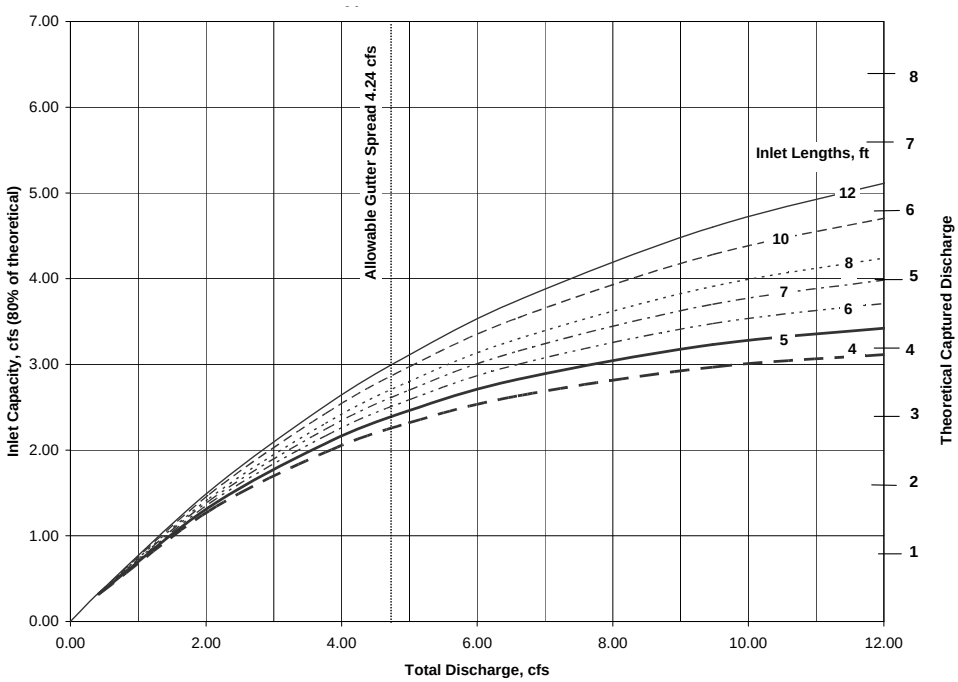

Figure 5604-13: Type CG-2 Curb, S_x=2%, S_o=2.0%

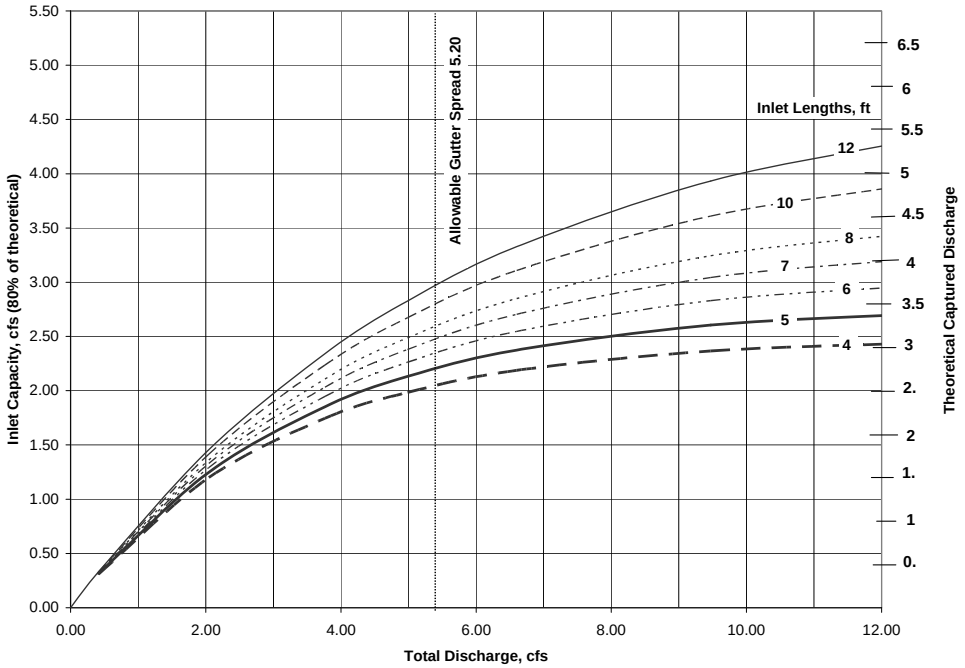

Figure 5604-14: Type CG-2 Curb, S_x=2%, S_o=3.0%

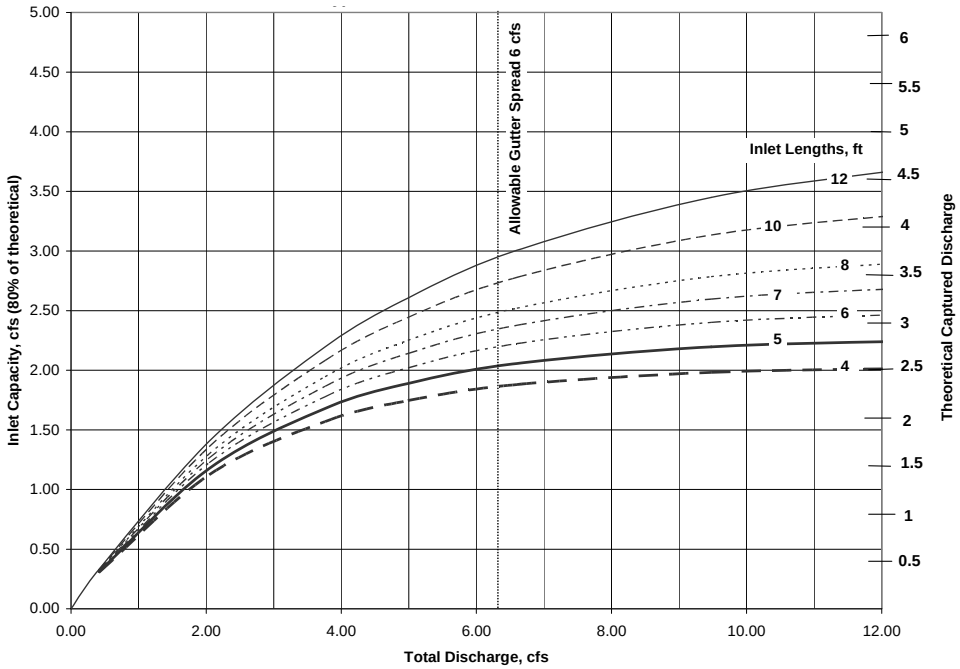

Figure 5604-15: Type CG-2 Curb, S_x=2%, S_o=4.0%

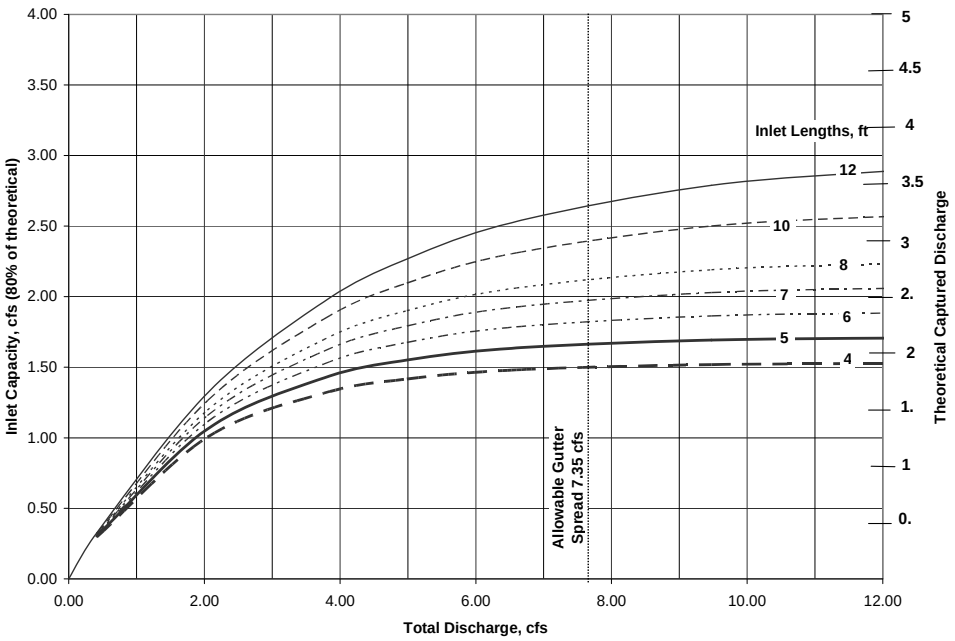

Figure 5604-16: Type CG-2 Curb, S_x=2%, S_o=6.0%

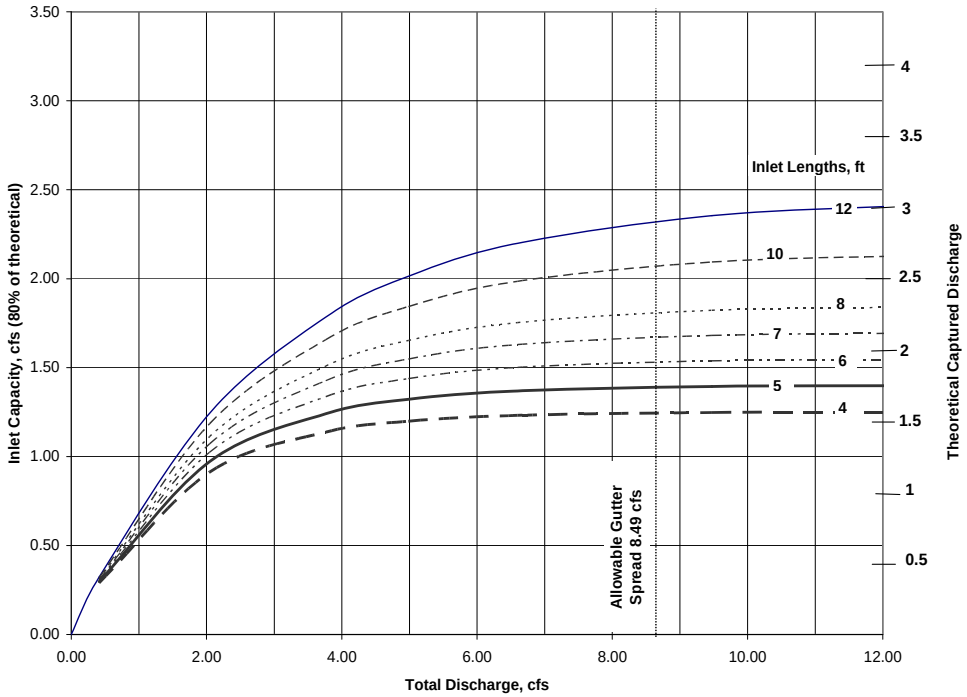

Figure 5604-17: Type CG-2 Curb, S_x=2%, S_o=8.0%

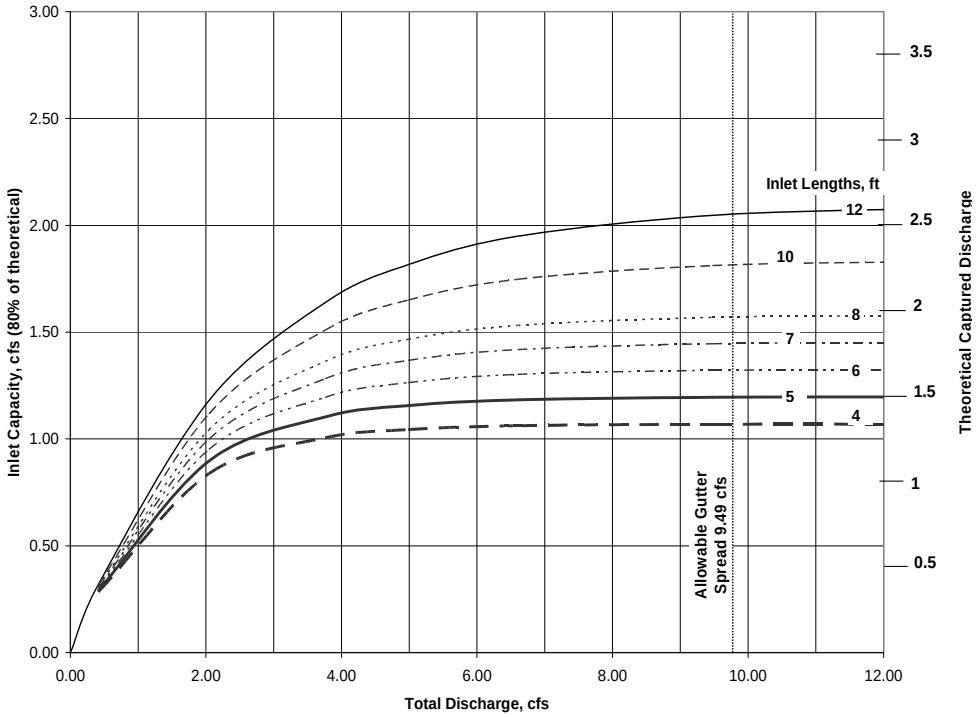

Figure 5604-19: Type CG-2 Curb, S_x=2%, S_o=10.0%

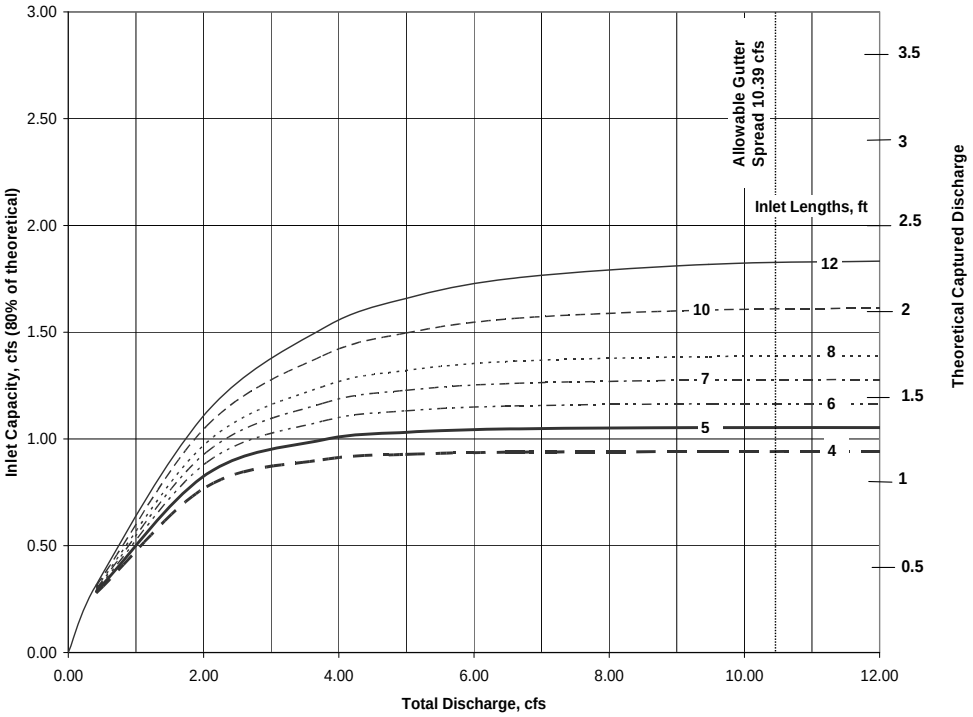

Figure 5604-18: Type CG-2 Curb, S_x=2%, S_o=12.0%

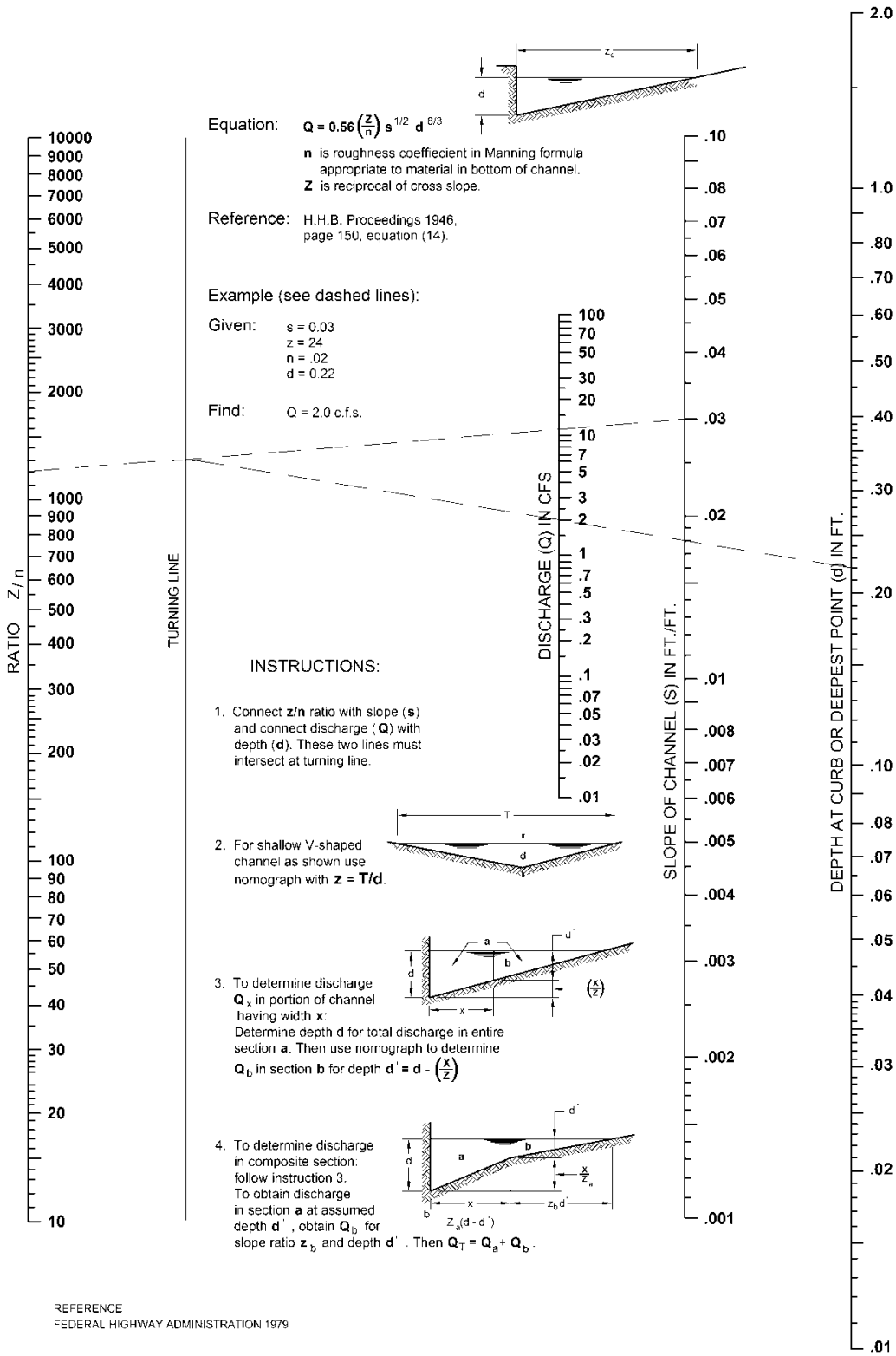

Figure 5604-20: Nomograph for Flow in Triangular Channels

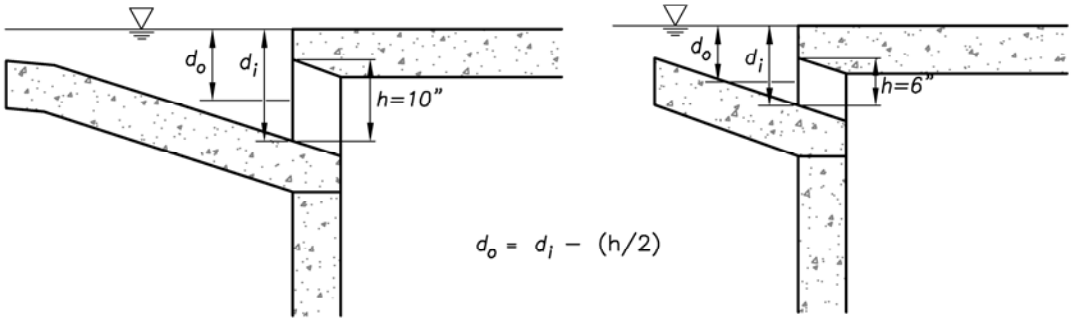

TYPE 1 CURB INLET

TYPE 2 CURB INLET

Type	h	d_i	d_o	Q_i	80% Q_i
1	10"	14"	9"	3.9L	3.1L
2	6"	10"	7"	2.1L	1.7L

$$Q_i = C_o\ h\ L\ (2\ g\ d_o)^{0.5}$$

C_o = orifice coefficient (0.67)
d_o = effective head on the center of the orifice throat, ft
L = length of orifice opening, ft
d_i = depth at lip of curb opening, ft
h = height of curb opening orifice, ft
g = gravitational constant, 32.2 ft/sec²
Q_i = theoretical inlet capacity (cfs)

Figure 5604-21: Capacity of Curb Opening Inlet at Sump

SECTION 5605 NATURAL STREAMS

5605.1 Scope

This section sets forth requirements for the protection of natural streams as a conveyance for stormwater. Unless otherwise provided for by City, State, or Federal ordinance, regulation, or standards, existing natural streams shall be preserved and protected in accordance with this section. Where natural streams are not preserved, the drainage will be handled through systems designed in accordance with Sections 5606 and 5607.

5605.2 Natural Stream Benefits and Characteristics:

Natural streams provide numerous water quality, ecological, and quality of life benefits. Protection and preservation of natural streams is a national environmental objective, as set forth in the Clean Water Act. Streams and their associated wetlands provide critical habitat for plants and wildlife, water quality treatment, and improved infiltration of rainfall which lessens flood impacts, recharges groundwater, and preserves base flow. Streams provide recreational and open space in communities, improve aesthetics, provide natural landscapes, and enhance adjacent property values.

Stable streams in nature maintain a shape in plan, profile, and section that most efficiently transports the water and sediment supplied to them. The geometry and processes of natural streams involve unique terminology and concepts not common to engineered channels or pipe systems. Common features of stream geometry and characteristics are presented in Figures 5605–1 through 5606-3. Certain definitions are contained in Section 5601. More complete information regarding the character and function of natural streams is given in Interagency (2001).

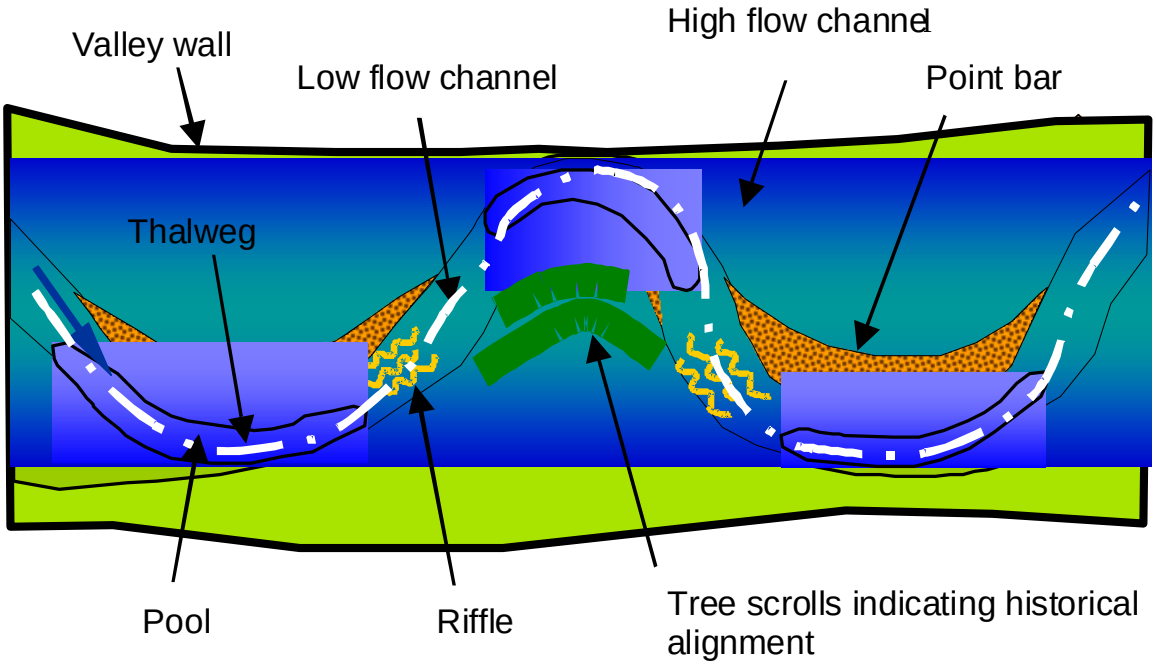

Figure 5605-1: Typical Stream Characteristics (1 of 3)

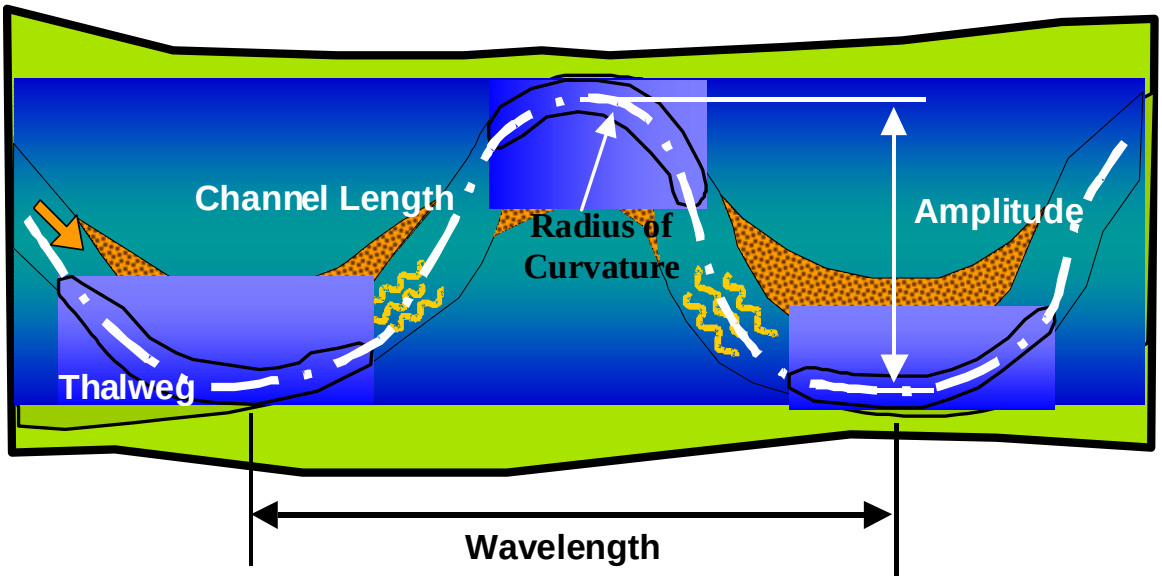

Figure 5605-2: Typical Stream Characteristics (2 of 3)

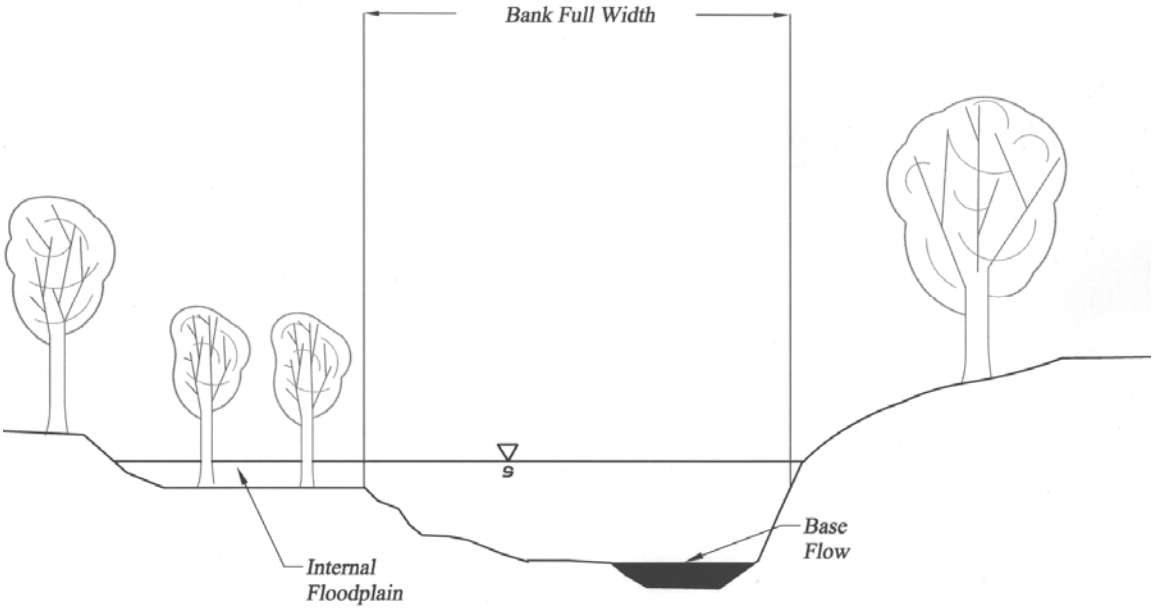

Figure 5605-3: Typical Stream Characteristics (3 of 3)

5605.3 Stream Preservation and Buffers Zones

A. Recommended Approach: It is recommended that Cities adopt comprehensive stream preservation and buffer zone requirements as part of their master plan and enforce those policies during the planning phase of land development. Requirements may be selected to protect environmental and quality of life benefits and be tailored to local geography and natural resources. The size of buffers may be adjusted to reflect local experience with stream migration and stability, protection of adjacent wetlands or critical habitat, or water quality treatment.

Guidance on stream protection is given in Wegner (1999), National Academy of Sciences (1999), and Heraty (1995). Natural streams should be preserved as systems and not segmented on a project-by-project basis, as the frequent intermixing of natural and man-made systems tends to degrade the function of both.

B. Default Approach: Where such comprehensive strategies have not been adopted, the following requirements shall be satisfied for all development/redevelopment proposed adjacent to or ultimately discharging to an existing natural channel:

1. Streams having a tributary area in excess of 40 acres shall be preserved. Preservation of smaller streams is encouraged. Preservation may be waived by the City/County Engineer where it is impractical, provided that the project has also received appropriate state and federal permits.

2. Buffer zones shall be established around all preserved streams. The limit of buffer zones shall be formally designated on a plat, deed, easement, or restrictive covenant, as directed by the City. Buffer widths as measured from the ordinary high water mark (OHM) outward in each direction shall exceed the dimensions shown in Table 5605-1.

Table 5605-1: Stream Buffer Widths

Contributing Drainage Basin Size (acres)	Buffer Width*
Less than 40 acres	40 feet
40 acres to 160 acres	60 feet
160 acres to 5000 acres	100 feet
Greater than 5000 acres	120 feet

*Measured from OHM outwards, measured separately in each direction

3. The City/County Engineer may require wider buffers for less stable stream or special conditions to address water quality and ecological needs. These widths provide only moderate allowance for widening or migration in local streams of average stability. Geotechnical studies may be required if there is a risk of slope failure due to underlying soil or rock materials, and the buffer width shall be expanded to contain the zone of failure. Smaller buffers in isolated locations may be allowed where provision of the full width is impractical and bank stability concerns have been addressed.

4. No construction or disturbance of any type, including clearing, grubbing, stripping, fill, excavation, linear grading, paving, or building is allowed in the buffer zone except by permission of the City/County Engineer. Dense stands of native vegetation shall be maintained, particularly in the 25 feet closest to the top of bank.

5. Unless otherwise accepted by the City/County, any maintenance of riparian buffers shall be the responsibility of the property owner.

6. For work on existing facilities already located closer to the stream than allowed above, the new construction shall not encroach closer to the stream. Bank stability concerns shall be addressed. Formal designation of a buffer zone is not required.

5605.4 In Stream Construction - General Requirements

Construction in streams or their buffer zones shall conform to the general requirements of this subsection and to the appropriate specific requirements of the subsections following:

A. Stream Assessment: A stream assessment shall be conducted in accordance with Section 5605.5 for all construction within the buffer zone except for discharge outfalls, unless otherwise directed by the City/County Engineer.

B. Energy Management: The pre-project and post-project hydraulic and energy grade lines for the 100%, 10%, and 1% storm flows shall be plotted. The region of a stream where in-stream construction causes a change in these grade lines is considered the zone of influence. The extent of the zone of influence downstream shall be generally limited by energy dissipation and grade control. The upstream limit of the zone may extend a distance beyond the construction as a drawdown or backwater curve. Within the zone of influence, the energy of the flow on the channel will be evaluated for the potential of excessive scour, deposition, initiation of head cuts, or other instability. Use of vegetation to increase bank resistance and minimize increases or abrupt changes in velocities is recommended. Bank or bed stabilization may be required in areas of unavoidable velocity or depth increase.

C. Sediment Transport Continuity: The minimum post-project applied shear to the bed of the channel in the zone of influence at the 100%, 10%, and 4% ultimate conditions storm flow shall not be less than 90% of the minimum pre-project applied shear in the zone, so as to maintain the ability of the channel to transport sediment. If such shear stresses cannot be maintained, the engineer will evaluate the potential for future sediment removal or maintenance.

D. Transitions: In-stream structures shall be designed to gradually blend into the natural channel and provide a smooth transition of both geometry and roughness.

E. Repair of Disturbed Banks: The side slopes of banks where construction occurs shall be restored with vegetation in accordance with Section 5605-13 as quickly as possible.

F. Professional Judgment: Natural streams are complex, variable, and strongly governed by local geology and climate. These standards are based on general guidelines of good practice on typical local streams and may not be optimal or sufficient in all cases. Specific requirements may be increased or waived by the City/County Engineer if conditions warrant and decisions should be guided by prudent engineering judgment.

5605.5 Stream Assessment

When conducted, a stream assessment will extend a minimum of one wavelength up and downstream of the area to be impacted by construction. It shall include the components listed below, except modified by the City/County Engineer to better fit project needs. An example submittal is shown in Figures 5605-4 and 5605-5.

A. Plan Form Analyses and Inventory: The plan-view of the natural stream using aerial photographs or planning-level aerial survey shall be plotted to an appropriate scale. Field surveys of the entire reach study area are not required. The following items shall be shown:

- Ordinary high water mark.
- Top of bank.
- Ground contours (if available).
- "Bank-full" and floodplain for the 1% ultimate-conditions storm (see paragraph B).

- Thalweg, locations of riffles and pools, and spacing between riffles (see paragraph C).
- Exposed bedrock, areas of differing bed and bank soil or rock materials, and the D_{50} and shear stress ratio at each riffle (see paragraph D)
- Active scour and depositional areas, point bars, and islands.
- Vegetation within the buffer zone, called out as mowed grass, mowed with trees, unmowed grass and plants, wooded, and bare. Trees greater than 6" diameter within 25 feet of the top of bank shall be located individually or by group. The species of dominant trees should be noted.
- Meander length, wavelength, meander amplitude, bank-full width, and radius of curvature for each bend.
- Total meander and valley length and sinuosity for the reach.
- Photographs of main channel, streamside vegetation, and each riffle, appropriately referenced to plan-view location.

B. Bank-full Width, Depth and Discharge: If directed by the City/County Engineer, the geomorphic "bank-full" width, depth, and discharge shall be estimated using field indicators as detailed in Chapter 7 of USDA (1994). If field indicators are not used, "bank-full" flow shall be estimated as the rural-conditions 50% storm flow, and the bank-full width and depth estimated based on the dimensions of that flow through the existing channel. This assumption is intended to provide a rough upper estimate of the bank-full flow.

C. Longitudinal Profile and Sections: The elevations of the profile along the thalweg shall be field surveyed to the nearest 0.1 ft. and the following features noted: riffles, pools, exposed bed rock, and advancing head cuts (areas of bed elevation change that appear to be actively migrating upstream). The top of left and right bank and any field indicators of bank-full flow such as limits of woody vegetation or top of point bars shall be plotted at correct elevation along the profile. The bank-full flow and 1% ultimate storm flow profiles shall be plotted.

   One field cross section shall be surveyed through each pool and riffle, and the depth and width of bank-full flow and floodplain for the 1% ultimate conditions storm shall be shown on each section.

D. Bed and Bank Materials Analyses: The type of rock exposed in the bed and banks shall be identified. Bank soils shall be reported by Uniform Soil Classification using the visual-manual procedures (ASTM D 2488-00). The median (D_{50}) particle size shall be determined using the Wolman Pebble Count Method (USDA, 1994, Chapter 11). A shear stress ratio shall be calculated for each riffle based on the applied shear at bank-full flow divided by the critical shear of the D_{50} particle in the riffle, using methods and tables described below.

E. Critical Shear Stress Analysis: The shear stress ratio must be less than one at the extreme downstream point of any development in accordance with the guidelines below:

   1. The average applied shear stress (τ_0) may be calculated from the hydraulic data as follows:

$$\tau_0 = \gamma \cdot R \cdot S$$

   Where:

   γ = the specific weight of water (62.4 pounds per cubic foot)

   R = hydraulic radius at bank-full flow (feet)

   S = the water surface slope along the main channel bank full flow, averaged over several bends in the area of the intervention.

   Effective flow may be calculated using methods described in detail in USACE 2001 or may be assumed to be equivalent to the 50% storm.

2. The critical shear stress (τc) is that at which particles in the bed or bank are entrained and scour ensues. Shield's method is used for calculating the calculating the critical shear stress of spherical, non-cohesive particles, as follows:

$$\tau_c = \theta(\gamma_s - \gamma)D_{50}$$

Where

γ_s = the specific weight of sediment

γ = specific weight of water (62.4 lb/ft3)

D_{50} = the median particle size in the surface layer of bed or banks

θ = the Shield's parameter (0.06 for gravel to cobble, 0.044 for sand)

There are limited methods for calculating τ_c for fine-grained material. Field or laboratory testing generally determines the critical shear stress for these materials. The most widely available source is Chow (1988). Table 7-3, p. 165 is particularly relevant. More recently, the USDA Agricultural Research Service National Sedimentation Laboratory has developed computer software for calculating toe scour (ARS Bank-Toe Erosion Model, Prototype, August 2001). As part of that software, there are look-up tables.

The combination of these two sources is presented in Table 1. Critical shear stress may also be determined from Urban Water Resources Research Council (1992), Figure 9.6, p. 335.

In lieu of calculated values, the critical shear stress from Table 5605-2 may be used. Table 1 presents critical shear for sediment-laden water and where noted, clear water. The user must exercise judgment as to future conditions. Clear water values may be used below a heavily piped area, concrete channels designed to contain the future flows or immediately below a managed detention pond.

3. The ratio of average boundary stress to critical stress is the shear stress ratio:

$$shear\ stress\ ratio = \frac{\tau_o}{\tau_c}$$

If bed and bank materials are distinct, then the shear stress ratio should be calculated for each. If the shear stress ratio of either stream bed or bank is greater than one, the channel is prone to near-term adjustment and any interventions should be designed to prevent accelerated erosion. If the bed consists of rock, then the shear stress ratio is not applicable, unless the rock is prone to fracturing, slaking, or break-up, in which case the median size of particle should be used for calculation of the ratio.

Table 5605-2: Critical Shear Stresses For Channel Materials

(Solely for use in stream assessments as described in Section 5605.5. Not to be used as allowable shear stresses for design)

Material	Shear Stress (psf)
Granular Material	
Boulders (100 cm)	20.295
Boulders (75 cm)	15.222
Boulders (50 cm)	10.148
Boulders (25.6 cm)	5.196

Table 5605-2: Critical Shear Stresses For Channel Materials

(Solely for use in stream assessments as described in Section 5605.5. Not to be used as allowable shear stresses for design)

Material	Shear Stress (psf)
Rip Rap	3.132
Cobbles (6.4 cm)	1.299
Cobbles and shingles	1.100
Cobbles and shingles, clear water	0.910
Coarse sand (1mm)	0.015
Coarse sand (1mm)	0.015
Coarse gravel, noncolloidal (GW), clear water	0.300
Coarse gravel, noncolloidal, (GW)	0.670
Gravel (2cm)	0.406
Fine gravel	0.320
Fine gravel, clear water	0.075
Fine sand (0.125 mm)	0.002
Fine sand (0.125 mm) (SP)	0.002
Fine sand (SW), (SP), colloidal	0.075
Fine sand, colloidal, (SW), (SP), clear water	0.027
Graded loam to cobbles, noncolloidal (GM)	0.660
Graded loam to cobbles, noncolloidal,(GM), clear water	0.380
Graded silts to cobbles, colloidal (GC)	0.800
Graded silts to cobbles, colloidal, (GC), clear water	0.430
Fine Grained	
Resistant cohesive (CL), (CH)	1.044
Stiff clay, very colloidal, (CL)	0.460
Stiff clay, very colloidal, (CL), clear water	0.260
Moderate cohesive (ML-CL)	0.104
Ordinary firm loam (CL-ML)	0.150
Ordinary firm loam, (CL-ML), clear water	0.075
Alluvial silts, colloidal (CL-ML)	0.460
Alluvial silts, colloidal,(CL-ML), clear water	0.260
Alluvial silts, noncolloidal (ML)	0.150
Alluvial silts, noncolloidal, (ML), clear water	0.048
Sandy loam, noncolloidal (ML)	0.075

Table 5605-2: Critical Shear Stresses For Channel Materials

(Solely for use in stream assessments as described in Section 5605.5. Not to be used as allowable shear stresses for design)

Material	Shear Stress (psf)
Sandy loam, noncolloidal, (ML), clear water	0.037
Silt loam, noncolloidal (ML)	0.110
Silt loam, noncolloidal, (ML), clear water	0.048
Shales and hardpans	0.67
Others	
Jute net	0.46
Plant cuttings	2.09
Well established dense vegetation to the normal low water	2.16
Geotextile (synthetic)	3.01
Large Woody Debris	3.13

Note: For non-cohesive soils, the table values are based on spherical particles and Shield equation, as follows: $\tau_c = \Theta(\gamma_s - \gamma) D$ where γ_s is the specific weight of sediment (165 pcf), γ is specific weight of water, D is the reference particle size, and Θ is the Shield's parameter (0.06 for gravel to cobble, 0.044 for sand). For cohesive soils the values are based on limited testing as reported in Chow (1988) and USDA (2001).

F. Plan-Form Ratios: The following ratios shall be calculated, and those that lie outside the typical range shall be noted. Streams are highly variable and ratios outsides these ranges do not necessarily indicate problems.

Table 5605-3: Plan-Form Ratios

Ratio	Typical Range
Meander length / Wavelength (sinuosity)	1.1 to 1.5
Meander length / Bank-full width	10 to 14
Radius of curvature / Bank-full width	2 to 5
Riffle Spacing / Bank-full width	5 to 7

G. Channel Condition Scoring Matrix: Using information summarized above, the channel condition scoring matrix given in Table 5605-4 shall be completed. A rating of 12 indicates a stream of moderate stability that will likely require only standard levels of protection during construction. A rating between 12 and 18 indicates that special measures may be necessary address those issues rated as poor in the assessment. Streams with a rating greater than 18 may exhibit significant system-wide instability. These streams should be studied in more detail by experts in river engineering and fluvial geomorphology. (This scoring system is newly developed and its results shall be considered provisional.)

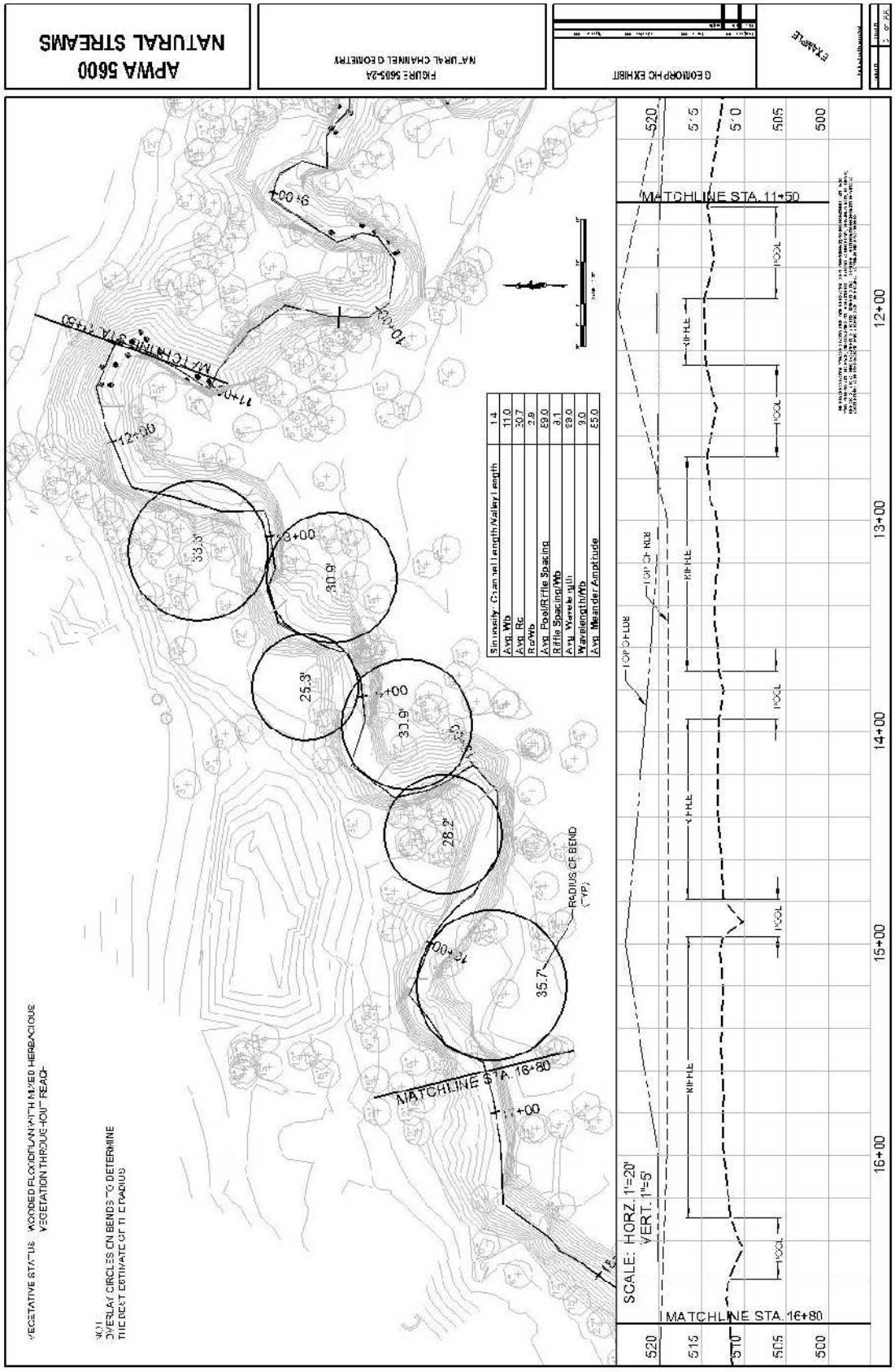

Figure 5605-4: Natural Channel Assessment

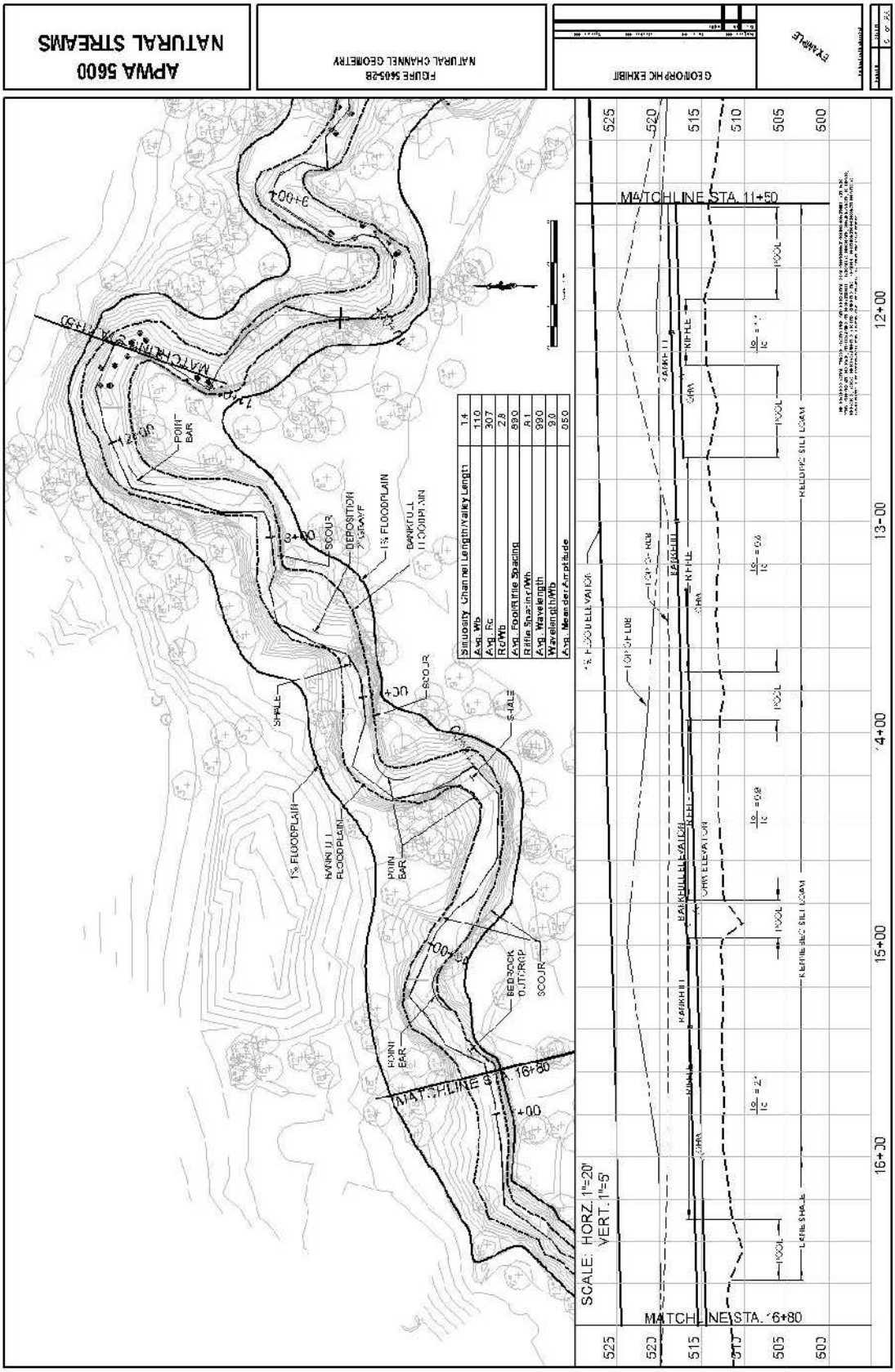

Figure 5605-5: Natural Channel

5605.6 Discharge Outfalls

Discharge points for inflows from enclosed systems or constructed channels shall be designed as one of the following. Energy management and sediment continuity checks are not required; however, energy dissipation shall be provided to reduce post development shear stress to pre-development shear stress at the outfall:

A. Primary outfalls are those where the entire upstream channel is replaced by an enclosed system or constructed channel which discharges flow in line with the direction of the downstream segment. Energy dissipation should be provided at the outlet to reduce velocities per Section 5606.4. Grade control downstream of the outlet and energy dissipater should be provided to prevent undermining of the outfall by future head cuts per Section 5605.10. The alignment and location of the outfall and associated energy dissipater and grade control should make a smooth transition into the downstream channel. Primary outfalls shall be used whenever the contributing drainage area of the outfalls is greater than 80% of the downstream channel.

B. Tributary outfalls are primary outfalls located on a tributary to a larger downstream segment. Energy dissipation and transition to natural stream flow should take place in the tributary at least one channel width upstream of the confluence per Section 5606.4. Grade control in the tributary upstream of the confluence shall be provided if the tributary flow line is higher than the adjoining channel or if future incision of the adjoining channel is anticipated. Tributary outfalls may be used in all situations of tributary flow.

C. Lateral outfalls are small outfalls that discharge from the banks of a natural stream. Outfalls shall be located to enter on a riffle or from the outside of a bend, but should generally not enter from the inside of a bend. Outfall pipes shall be oriented perpendicular to the flow of the stream with the invert at or slightly below top of the next downstream riffle. Outfalls shall be flush with or setback from the bank. The bank shall be shaped to provide a smooth transition and protected with reinforced vegetation (preferred) or rip-rap. If the outfall is in a bend, it shall be set back from the existing bank a sufficient distance to account for future meander migration, and the transition shall be graded and reinforced with vegetation. Riprap or hard armor protection should not be used in a bend. Perpendicular outfalls may only be used when the contributing drainage area of the outfall is less than 40% of that in the downstream channel.

D. Edge-of-buffer outfalls are discharge points in the outer half of the riparian buffer that return the discharge to diffused overland flow. Outfalls shall be designed to spread flow and allow overland flow and infiltration to occur. Overland flow shall be directed to run in the outer portion of the buffer parallel to the channel direction to increase length of flow and prevent short-circuiting directly into the stream. Low weirs and berms may be graded to direct flow and encourage short-term ponding. The buffer zone utilized for infiltration shall be maintained in dense, erosion-resistant grasses or grasses reinforced with turf-reinforcing mats designed to withstand the shear stresses of a 10% storm. Edge-of-buffer outfalls that are part of a system of upland drainage using multiple small, distributed overland swales and ditches instead of pipes may provide significant infiltration and water quality treatment. Edge-of-buffer outfalls shall only be used if each individual outfall can be designed to operate without scour or the formation of gullies.

5605.7 Culverts, Bridges, and Above Grade Crossings

A. Crossings should generally be located on a riffle. If the width of the crossing is large relative to the length of the riffle, then grade control structures shall be provided at the riffles upstream and downstream to isolate the impact of the crossings. If a crossing cannot be made at a riffle, avoid armoring a pool and place at-grade grade control structures at the riffle immediately upstream and downstream of the crossing. Maintain sediment transport continuity and avoid altering the channel cross-section.

B. Realignment of channels to accommodate crossings and their approach should be avoided and minimized as much as possible. Any areas relocated shall have the banks stabilized in accordance with 5605.13 and shall be included in the reach isolated by upstream and downstream grade control.

C. For bridges the multi-stage channel shape should be maintained and additional area to convey the design flow shall be above the elevation of the bank-full discharge.

D. For multi-cell pipe and culvert crossings that have a cumulative width larger than the bank-full width, those cells wider than the bank-full width shall have a flow line located at the lowest estimated bank-full depth, or a weir wall or other structure upstream of the culvert opening shall be installed with a height to prevent access to the cell during flows less than bank-full flow. The weir wall shall be designed so that the hydraulic efficiency at the1% ultimate conditions storm is not reduced. Without these features, the culvert may have a tendency to build up deposits and lose capacity or require frequent maintenance, particularly when crossings are located in sharp bends or streams with high sediment loads.

E. Culverts shall be designed so that there is minimal backwater effect at all flows up to the 4% storm discharge. Energy management and sediment transport continuity shall be checked.

5605.8 Below Grade Stream Crossings

A. Below grade stream crossings primarily include utility pipelines. Crossings should generally be at riffles and grade control structures constructed at the riffle, in addition to or constructed integrally with any encasement of the line the utility may require.

B. If riffle crossing is not feasible, the crossing should be in a pool that is protected by a downstream grade control structure. The top of crossing elevation should be at least two feet below the top of grade control. Crossings under pools should not be armored directly, but are protected by downstream grade control.

C. Below grade crossings shall be perpendicular to the stream whenever possible. If a perpendicular crossing is not feasible, the grade control protecting the crossing shall be perpendicular.

D. Constriction or alteration of the pre-existing channel shape shall be avoided. If alteration occurs, sediment transport continuity and energy management shall be verified. Stream banks shall be repaired using vegetative methods whenever possible and the hydraulic roughness of the repaired stream bank should match that of the undisturbed stream banks.

5605.9 Grade Control

A. Where grade control structures are required, they shall be placed in locations where the stream bed profile will support the creation or continuance of a riffle. The flow line of the grade control shall match the existing riffle.

B. Where stream slope is less than 2%, the Newberry-style grade control structure detailed in Figure 5605-6 is recommended. Structures shall be constructed from durable stone sized using USACE methodology for steep channels (USACE EM 1110-2-1601, page 3-8, Equation 3-5). Rock shall generally comply with USACE gradations as given in (USACE EM 1110-2-1601, Hydraulic Design of Flood Control Channels, Chapter 3). Shotrock with sufficient fines to fill voids may be used. The use of filter fabric and uniform gradations of stone are discouraged in stream beds.

C. Where grades are in excess of 2%, low-drop step structures should be used.

D. Alternate styles of grade control may be approved by the City/County Engineer. Guidance for grade control design is given in Thomas et.al.

E. Construction of new grade controls structures may be waived by the City/County Engineer if it is determined that existing riffles are adequate to prevent or retard advancing head cuts, or if it is preferable to accept the risk of future head cut than to further disturb the channel.

F. When grade control is not part of a larger project, energy management and sediment continuity checks are not required.

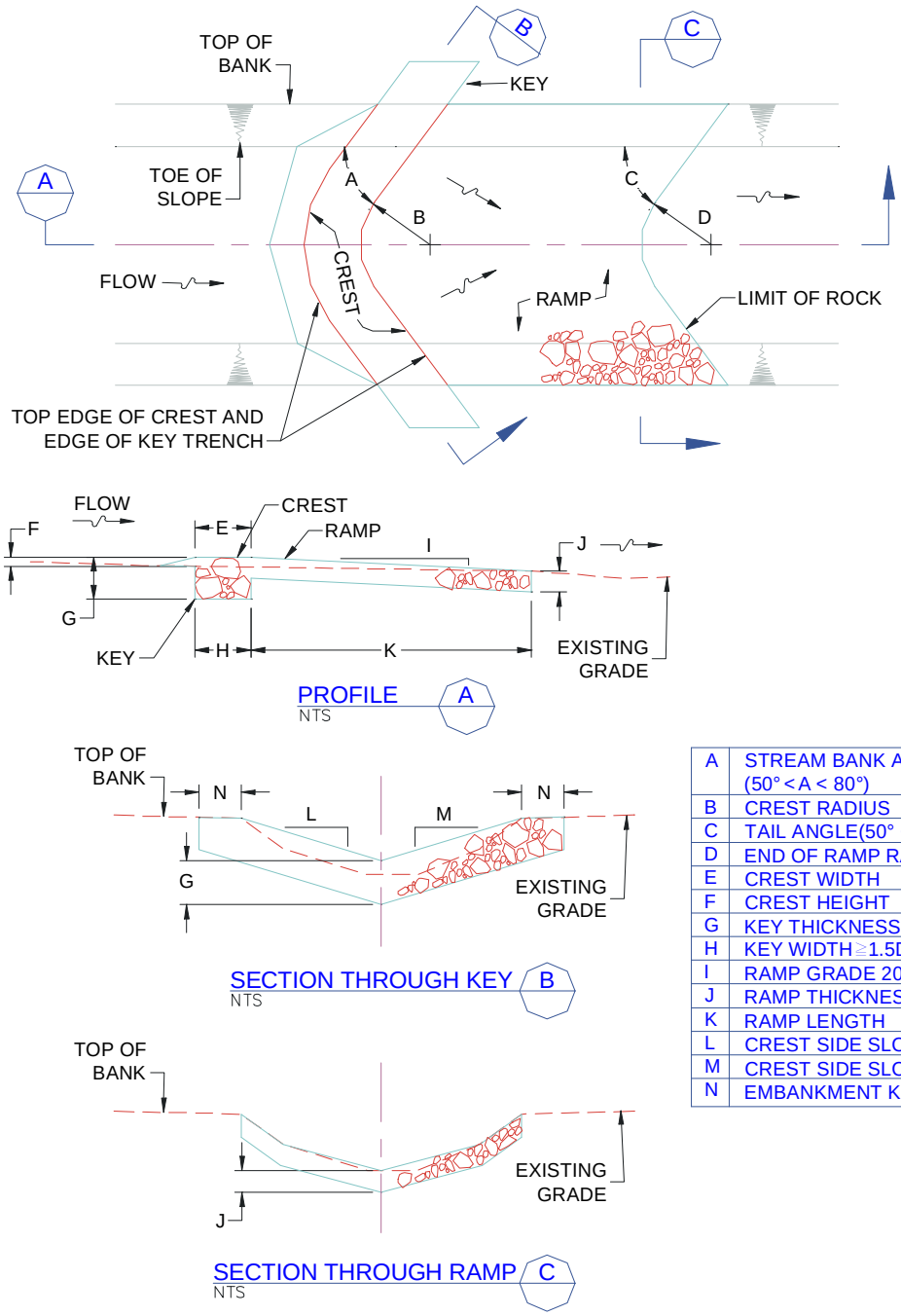

A	STREAM BANK ANGLE (50° < A < 80°)
B	CREST RADIUS
C	TAIL ANGLE(50° < A < 80°)
D	END OF RAMP RADIUS
E	CREST WIDTH
F	CREST HEIGHT
G	KEY THICKNESS ≧ 1.5D90
H	KEY WIDTH ≧ 1.5D90
I	RAMP GRADE 20H:1V
J	RAMP THICKNESS ≧ 1.5D100
K	RAMP LENGTH
L	CREST SIDE SLOPE
M	CREST SIDE SLOPE
N	EMBANKMENT KEY

Notes

1. The depth of key trench shall be a minimum of 1.5 D90.The crest shall slope downward from the stream bank to the center of the structure to focus the flow to the channel center. The tail ramp is generally sloped at 20 horizontal to 1 vertical and dissipates energy gradually over it length. The upstream face is not perpendicular to the flow but has an upstream oriented “V” or arch shape in plan form.
2. For item A, Stream Bank Angle, and item C Tail Angle, the lower end of the range should be used for softer soils.
3. For items L and M, crest angle, the typical range is 5 to 1 to 10 to 1.

Figure 5605-6: Grade Control Structure

5605.10 Floodplain Fills:

No fill shall be placed within the bank-full floodplain, nor should fill be placed within the designated buffer zone. Fill placed outside these limits shall not cause a rise in the floodplain of the 1% ultimate conditions storm beyond the limits of the property controlled by the developer, unless authorized by the City/County Engineer. Fills placed within floodplain designated as a special flood hazard area by FEMA shall conform to FEMA and community floodplain management requirements. Energy management and sediment transport continuity shall be checked.

5605.11 Flood Control Projects:

A. The flood control projects that increase conveyance capacity in natural streams should generally be limited to cases where existing buildings or infrastructure face significant damage or life and safety issues. Projects to lower floodplain elevations to facilitate new development near streams at lowered elevations should be avoided.

B. The portion of the channel within the bank-full floodplain should be left undisturbed if possible, with conveyance increases primarily from excavation of a larger cross sectional area in the over-bank. Excavated areas within the buffer zone should be revegetated with dense, native-type vegetation. Reducing roughness in the over-bank by paving or mowing to increase velocities should be avoided.

C. If adequate conveyance cannot be provided using the methods above, then excavation of the over-bank below the bank-full floodplain and/or reduction in over-bank roughness may be necessary. Energy management and sediment continuity should be checked. Effort should be made to avoid direct widening of the active channel at low flows and to minimize disturbance of the active channel and nearest adjacent stream-side vegetation.

5605.12 Bank Stabilization Projects

A. Bank stabilization projects should generally be limited to cases where existing buildings or infrastructure face significant property damage or safety issues. Projects to stabilize banks to facilitate reductions in buffer widths for new construction should be avoided.

B. Prior to stabilization, the causes of the instability should be considered, including the stream's current phase of channel evolution (Interagency, 2001, Chapter 7) and direction of meander migration. Stabilization may be unnecessary if a channel has ceased incision and widening and is in the process of deposition and restoration. If stability issues appear widespread or complex, a systematic evaluation of the stream system by professionals with expertise in river engineering and fluvial geomorphology may be justified.

C. Instability caused by geotechnical failure (slumping of banks due to weak soils in the adjacent slopes) shall be distinguished from fluvial failure (erosion of banks caused by stream flows). For geotechnical issues, a geotechnical engineer shall evaluate the slope stability. Geotechnical designs shall provide for a 1.5 factor of safety (ratio of theoretical resisting forces to driving forces) against slope failure where it would endanger buildings, roadways, or other infrastructure, unless a lower factor of safety is approved by the City/County Engineer.

D. Bank stability projects should have a design life greater than the useful life of the facility being protected, or a life cycle cost analyses shall be performed that considers replacement and repair over the entire protection period. Responsible parties for future maintenance should be identified.

E. Stabilization should begin and end at stable locations along the bank. Bank stabilization should be limited to areas of potential erosion and are rarely required on the inside of bends. For long projects, stabilization may alternate from side to side and is rarely necessary across an entire cross section. The existing cross section should be mimicked to the extent practical and need not be planar or uniform over the entire length. Grade control shall be provided at the riffle both upstream and downstream of the stabilization to isolate it from the surrounding stream and protect the foundation from undercutting. Control at intermediate points

for longer projects may also be required. Energy management and sediment transport continuity shall be checked, and energy dissipation provided if necessary.

F. "Hard-Armor" projects are those projects that use rip-rap, placed stone, gabions, retaining walls, or other rigid structures to provide geotechnical and fluvial stability. Such projects shall be designed in accordance with EM 1110-2-1205 (USACE, 1989), EM1110-2-1601 (USACE, 1994), or HEC-11 (FHWA 1989). Materials shall be sized to prevent dislodgement in the 1% storm. Gradation should comply with USACE or FHWA recommendations. Stones should be placed to maintain roughness and variations. All material shall be well placed to ensure interlock and stability. Materials shall be keyed into the bed and banks with adequate allowance for scour along the toe and the structure should have adequate foundation. Vertical walls should be avoided when possible as they tend to concentrate scour at their toe and are typically smoother than the natural channel.

G. Soil bioengineering involves the use of living vegetation in combination with soil reinforcing agents such as geogrids to provide bank stabilization by increasing soil shear resistance, dewatering saturated soils, and by reducing local shear stresses through increased hydraulic roughness.

1. Bio-engineering projects shall be designed in accordance with the principals of NRCS (1996) and Gray and Sotir (1996). Designs will be tailored to the urban environment by consideration of the requirement for immediate functionality upon construction, the extreme variability and high shear stress of urban flows and the availability of mechanized equipment and skilled operators.

2. Selection of plants and specifications for planting methods and soil amendments shall be prepared by a professional competent in the biological and stabilization properties of plants.

3. Plants selected shall be appropriate to local conditions and shall be native varieties to the greatest extent practical. Evaluation of local conditions includes assessment of site microclimate, bank slope, soil composition, strength and fertility, type and condition of existing vegetation, proximity to existing infrastructure, soil moisture conditions and likelihood of wildlife predation. Engineering factors influencing plant selection include frequency, height and duration of inundation, near-bank shear stress, size and volume of bed load as well as depth and frequency of scour.

4. Plants may be either locally harvested or purchased from commercial nurseries. When harvesting, no more than 10% of a given stand may be removed and no plant on the state rare or endangered species list may be harvested or damaged in harvesting operations. Plant material grown near the metropolitan area is adapted to local climatic conditions and is preferred over more remote sources. Some species such as red maple are particularly sensitive to locale and may only be used if locally available. Seed, plant plugs, rhizomes, whips, live stakes, bare root and container stock may be used. Turf grasses, noxious or invasive species shall not be used. A variety of plant species shall be used to provide greater reliability to a design. For critical functions such as protection from toe scour a minimum of three species should generally be employed.

5. Soil bioengineering methods are properly applied in the context of a relatively stable stream system, and relevant general requirements for all stream bank stabilization projects given in this section apply to bio-engineered projects. Soil bioengineering alone is not appropriate when the zone of weakness lies below the root zone of the plantings, or when rapid drawdown can occur, such as in a spillway or dam embankment.

H. Composite methods are those which employ both hard armor and soil bioengineering. Typically, armor for toe protection in critical locations is provided, with soil-bioengineering for the remainder. Design principles for both hard armor and soil-bioengineering shall be observed as appropriate.

I. In-stream Stability Structures: In-stream structures are used to focus flow, control grade, dissipate energy and selectively lower near-bank stress. Stream barbs, weirs, guide vanes, vegetative sills, longitudinal peak stone, and grade controls are among the more commonly used in-stream structures. When constructed of natural material such as rock, such structures also create aquatic habitat. They may be

used alone or in combination with hard armor, bioengineering or composite methods. In-stream structure design is a river engineering practice and is beyond the scope of this standard. Preliminary guidance and references for the design of some common structures is given in Castro (1999) and Interagency (2001), Chapter 8 and Appendix A.

5605.13 Stream Restoration

Restoration of urban streams is defined as the re-establishment of natural channel geometry, materials and vegetative buffers with the intent of restoring natural geometry and functions to streams that have been disturbed or eliminated. While there are significant potential ecological and quality of life benefits from stream restoration, successful design is data-intensive and requires an interdisciplinary approach. Design of stream restoration projects is beyond the scope of this standard. Interagency (2001) describes the general procedures, benefits, and requirements of stream restoration.

5605.14 Comprehensive Stream Management:

The standards set forth in preceding sections provide a moderate degree of mitigation for potential damages from individual construction projects in streams of average stability. For more sensitive streams or to obtain a greater degree of protection, Cities or Counties may elect to implement comprehensive strategies for stream management. Such strategies should be based on specific investigations of the particular streams and watersheds in the city and consider local geology, geography, climate, and ecology. Strategies may include optimized or county stream buffers (see section 5605.3), hydrology controls, and comprehensive grade control. Detailed requirements for such studies and strategies are beyond the scope of this standard, and should be developed in consultation with professionals competent in river engineering and fluvial geomorphology. The following general recommendations may be considered:

A. Hydrology Controls for Channel Protection: Channels respond to changes in flow volumes and recurrence by altering width, depth, velocity, suspended load, meander radius, wavelength and pool and riffle. Avoiding significant changes in flow volume and recurrence should reduce the likelihood of major changes in stream form. Volume control may include practices that encourage infiltration, evapotranspiration, and short-term detention or retention. A successful strategy would require limitations on volume, duration and magnitude of post development discharges at a number of discharge points, including common storms such as the 100% storm. The tail of hydrographs would probably need to mimic groundwater base flow. The cumulative effect of multiple detention/retention structures on duration of high flows would be considered. The impact of large impoundments or retention lakes on trapping sediment and interrupting sediment transport would be considered. Volume control for channel protection would likely require significantly different control requirements than traditional detention practices that focused primarily on flood control from extreme events.

B. Grade Control: In watersheds subject to deep, rapid, and extensive incision or downcutting, a comprehensive program of controlling bed elevation (grade control) may be the most practical method of preserving stream function and avoiding future bank stability concerns. Streams with easily eroded soils and lacking in shallow bedrock are highly susceptible to extensive degradation. Existing and proposed crossing points such as culverts, bridges, and encased underground utilities should be incorporated into the program. Selection of grade elevations would be based on historical data, flooding or space constraints, restoration of wetlands and streambank hydrology, channel depths, and other relevant data.

Project: _____

Stream Name and Location: _____

Evaluated by: _____Firm: _____ Date:_____

Table 5605-4: Channel Condition Scoring Matrix
(adapted from Johnson, et al 1999)

Stability Indicator	Good (1)	Fair (2)	Poor (3)	Score (S)	Weight (W)	Rating S*W= (R)
Bank soil texture and coherence	cohesive materials, clay (CL), silty clay (CL-ML), massive limestone, continuous concrete, clay loam (ML-CL), silty clay loam (ML-CL), thinly bed limestone	sandy clay (SC), sandy loam (SM), fractured thinly bedded limestone	non-cohesive materials, shale in bank, (SM), (SP), (SW), (GC), (GM), (GP), (GW)		0.6	
Average bank slope angle	slopes ≤ 2:1 on one or occasionally both banks	slopes up to1.7:1 (60˚) common on one or both banks	bank slopes over 60˚ on one or both banks		0.6	
Average bank height	less than 6 feet	greater than 6 and less than 15 feet	greater than 15 feet		0.8	
Vegetative bank protection	wide to medium band of woody vegetation with 70-90% plant density and cover. Majority are hardwood, deciduous trees with well-developed understory layer, minimal root exposure	narrow bank of woody vegetation, poor species diversity, 50-70% plant density, most vegetation on top of bank and not extending onto bank slope, some trees leaning over bank, root exposure common	thin or no band of woody vegetation, poor health, monoculture, many trees leaning over bank, extensive root exposure, turf grass to edge of bank		0.8	
Bank cutting	little to some evident along channel bends and at prominent constrictions, some raw banks up to 4 foot	Significant and frequent. Cut banks 4 feet high. Root mat overhangs common.	Almost continuous cut banks, some over 4 feet high. Undercut trees with sod-rootmat overhangs common. Bank failures frequent		0.4	
Mass wasting	little to some evidence of slight or infrequent mass wasting, past events healed over with vegetation. Channel width relatively uniform with only slight scalloping	Evidence of frequent and significant mass wasting events. Indications that higher flows aggravated undercutting and bank wasting. Channel width irregular with bank scalloping evident	Frequent and extensive mass wasting evident. Tension cracks, massive undercutting and bank slumping are considerable. Highly irregular channel width.		0.8	

Table 5605-4: Channel Condition Scoring Matrix
(adapted from Johnson, et al 1999)

Stability Indicator	Good (1)	Fair (2)	Poor (3)	Score (S)	Weight (W)	Rating S*W= (R)
Bar development	narrow relative to stream width at low flow, well-consolidated, vegetated and composed of coarse bed material to slight recent growth of bar as indicated by absence of vegetation on part of bar	Bar widths wide relative to stream width with freshly deposited sand to small cobbles with sparse vegetation	Bar widths greater than ½ the stream width at low flow. Bars are composed of extensive deposits of finer bed material with little vegetation		0.6	
Debris jam potential	slight – small amounts of debris in channel. Small jams could form	moderate – noticeable debris of all sizes present	significant – moderate to heavy accumulations of debris apparent		0.2	
Obstructions, flow deflectors (walls, bluffs) and sediment traps	negligible to few or small obstructions present causing secondary currents and minor bank and bottom erosion but no major influence on meander bend	moderately frequent and occasionally unstable obstructions, noticeable erosion of channel. Considerable sediment accumulation behind obstructions	frequent and unstable causing continual shift of sediment and flow		0.2	
Channel bed material consolidation and armoring	massive competent to thinly bed limestone, continuous concrete, hard clay, moderately consolidated with some overlapping. Assorted sizes of particles, tightly packed and overlapped, possibly imbricated. Small % of particles < 4mm	shale in bed, soft silty clay, little consolidation of particles, no apparent overlap, moderate % of particles < 4mm	silt, weathered, thinly bedded, fractured shale, high slaking potential, very poorly consolidated, high % of material < 4mm		0.8	
Sinuosity	1.2 ≤ Sinuosity ≤ 1.4	1.1<Sinuosity <1.2	Sinuosity <1.1		0.8	
Ratio of radius of curvature to channel width	3 ≤ Rc/Wb ≤ 5	2 < Rc/Wb < 3, 5 < Rc/Wb < 7	2 < Rc /Wb, Rc /Wb > 7		0.8	
Ratio of pool-riffle spacing to channel width at elevation of 2-year flow	4 ≤ Length/Wb < 8	3 ≤ Length/Wb < 4, 8 < Length/Wb ≤ 9	3 < Length/Wb, Length/Wb > 9, unless long pool or run because of geologic influence		0.8	
Percentage of channel constriction	< 25%	26-50%	> 50%		0.8	
Sediment movement	little to no loose sediment	scour and/or deposition, some loose sediment	near continuous scour and/or deposition and/or loose sediment		0.8	

TOTAL ____

Table 5605-5: Characteristics of Certain Plants for Bio-Engineering

Common Name	Botanical Name	Forms Available	Comments* (see notes below)
Sandbar willow	Salix exigua	Live stake, whip, bare root	Shrub willow, stoloniferous, favors granular soils, inundation and scour tolerant, requires full sun, extensive fibrous roots
Peachleaf willow	Salix amygdaloides	Live stake, whip, bare root	Shrub willow, stoloniferous, favors granular soils, inundation and scour tolerant, requires full sun, extensive fibrous roots
Buttonbush	Cephalanthus occidentalis	Live stake, whip, bare root, container	Shrub, sun or shade, stoloniferous, tolerates extended inundation, high aesthetic value, nectar source
Silky dogwood	Cornus ammomum	Live stake, bare root	Roots from cutting with root hormone, shade tolerant, stoloniferous, shallow, fibrous roots
Roughleaf dogwood	Cornus drummondii	Bare root, container	Most sun and drought tolerant dogwood, extensive fibrous roots
River birch	Betula nigra	Bare root, B&B	High root tensile strength, rapid establishment, high aesthetics
Black walnut	Juglans nigra	Bare root, B&B	Check for juglome toxicity in rest of palette, deep arching roots, buttressing effect in rock soils, canopy species
Switch grass	Panicum virgatum	Seed, plant plug	Deep, high tensile strength roots, aggressive, may out compete other warm season grasses, good for mesic to dry sites
Arrowwood viburnum	Viburnum dentatum	Bare root, container	Highly adaptable to range of soil, moisture and sun conditions, understory shrub, high aesthetic value
Little blue stem	Schizachyrium scoparium	Seed, plant plug, container	Deep, high tensile strength roots, adaptable to dry sites, full sun to light shade

Notes:

Stoloniferous species, those with the ability to sprout from a network of near-surface stems, are used in high stress applications to protect against toe scour. The stoloniferous species form dense colonies and quickly regenerate when damaged.

Common riparian species such as black willow, box elder, and most poplar species should not be used in soil bioengineering applications in urban areas. Populus deltoides (eastern cottonwood) should be used only sparingly and where deep, loam soil is present. If the site is infested with Phragmites spp (common reed), bamboo, Phalaris arundinacea (reed canary grass), and polygonum spp (knotweed), the design must include a plan to positively eliminate the weedy species. While plant selection is site-specific the following species have broad applicability in urban streams.

SECTION 5606 ENCLOSED PIPE SYSTEMS

5606.1 Easements

Permanent easements shall be dedicated to the City/County for operation and maintenance of the storm drainage facilities. Easement width shall not be less than 15 feet, or the outside width of the pipe or conveyance structure plus 10 feet; whichever is greater. Easements shall be centered on the pipe.

A. Permanent: The City/County Engineer may require wider easements when other utilities are located within the same easement and/or when the depth of cover is greater than 4 feet.

B. Temporary: Temporary construction easements of sufficient width to provide access for construction shall be acquired when the proposed work is located in areas developed prior to construction.

5606.2 Capacity

Capacity shall be determined in accordance with Section 5603. Minimum design pipe size shall be 15-inch in diameter. For partially full pipe flow, Figure 5606-1 can be used to obtain hydraulic parameters of the flow.

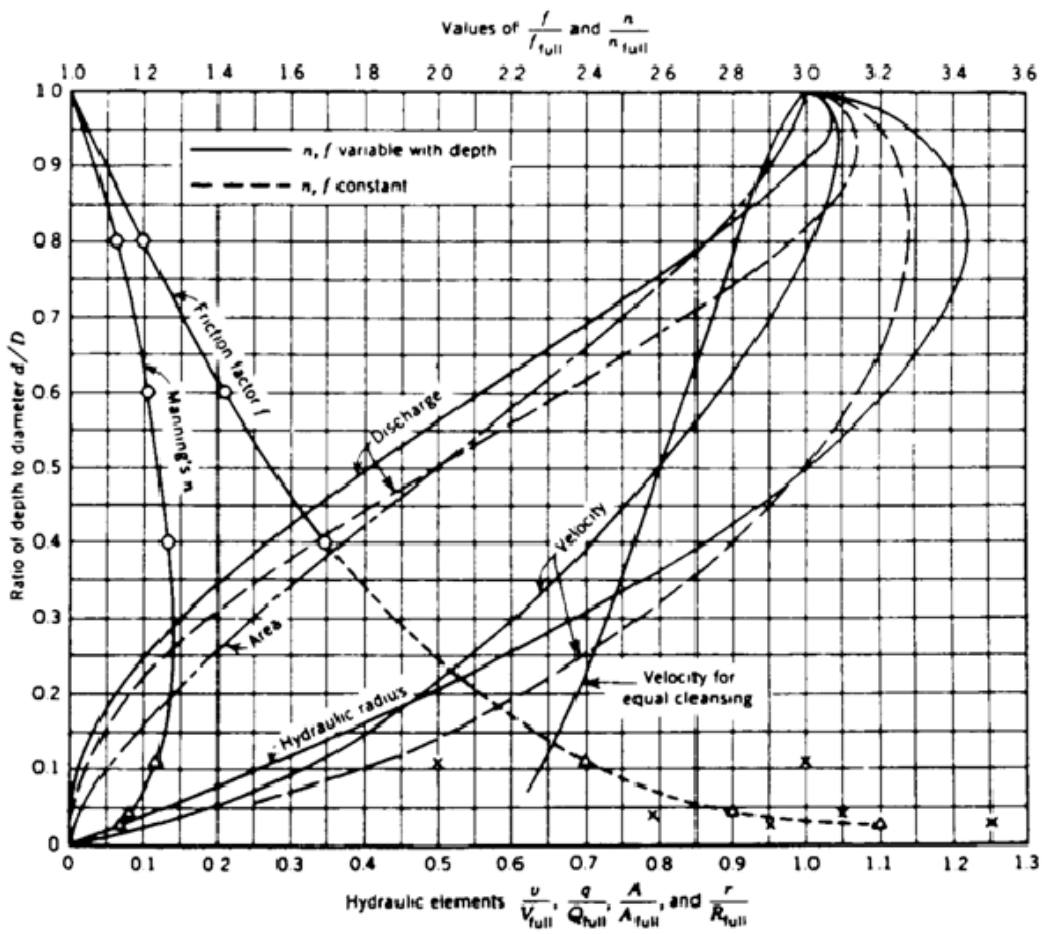

v	= Actual velocity of flow (fps)	A	= Area occupied by flow (ft^2)
V_{full}	= Velocity flowing full (fps)	A_{full}	= Area of pipe (ft^2)
q	= Actual quantity of flow (cfs)	r	= Actual hydraulic radius (ft.)
Q_{full}	= Capacity flowing full (cfs)	R_{full}	= Hydraulic radius of full pipe (ft.)

Figure 5606-1: Hydraulic Elements of Circular Conduits

5606.3 Pressure Flow

After considering the discussion presented in Section 5603.1 A, an enclosed system may be designed to operate with pressure flow, for the design storms specified in Section 5601.8, if all the following conditions are met:

A. The Hydraulic Grade Line (HGL) must be 0.5 feet below any openings to the ground or street at all locations.

B. Watertight joints capable of withstanding the internal surcharge pressure are used in the construction.

C. Appropriate energy losses for bends, transitions, manholes, inlets, and outlets, are used in computing the HGL.

D. Energy methods (Bernoulli's equation) must be used for the computations.

5606.4 Energy Dissipation:

The outfall, as defined in Section 5605.6, of all enclosed systems shall include energy dissipation sufficient to transition outlet flows to velocities and applied shear stresses consistent with the normal flow conditions in the receiving channel for the range of flows up to and including the 1% storm. Calculations, at a minimum, should include the 100%, the 10% and the 1% storms.

Energy dissipation for lateral outflows to natural streams and edge of buffer outfalls to riparian buffers shall follow the guidance in Section 5605.6. Effective energy dissipating structures shall be provided if necessary to meet the requirements stated in Tables 5605-2 and 5606-1. Examples of energy dissipating structures are:

- Check Dams
- Level Spreaders
- Hydraulic Jump Basins
- Impact Baffle Basins
- Plunge Pool and Plunge Basin
- Slotted-Grating or Slotted Bucket Dissipaters
- Stilling Basins
- Rock Revetment
- Internal Pipe Rings

Grade control shall be provided downstream of the dissipator or shall be constructed integrally with it.

The suitability of each method is site dependent and subject to approval by the City/County Engineer. Table 5606-1 lists methods and applicability.

Table 5606-1: Energy Dissipation Counter Measures

	Functional Applications		Suitable Environment			
Counter Measure	Vertical Control	Horizontal Control	Dam Outlets	Small Culverts	Large Culvert	References
Check Dam	X	O	X	X	X	2, 6
Level Spreaders	X	X	O	X	O	1
Hydraulic Jump Basins	X	X	X	X	X	1, 3
Impact Baffle Basins	X	X	X	X	X	1
Plunge Pool & Plunge	X	O	X	X	X	1

Table 5606-1: Energy Dissipation Counter Measures

Counter Measure	Functional Applications		Suitable Environment			References
	Vertical Control	Horizontal Control	Dam Outlets	Small Culverts	Large Culvert	
Basin						
Slotted-Grating or Slotted Bucket Dissipators	X	X	X	O	X	1
Stilling Basins	X	O	X	X	X	1, 2, 3, 4, 5, 6
Rock Revetment	X	X	X	X	X	1, 2, 6
Internal Pipe Rings	X	O	N/A	X	N/A	

LEGEND

X = Suitable Countermeasure

0 = Marginal Countermeasure

REFERENCES

1. Design of Small Dams 1987 United States Department of Interior
2. HEC 23
3. Hydraulic Design of Stilling Basins and Energy Dissipaters
4. HEC-14 FHWA Hydraulic Design of Energy Dissipaters for Culverts and Channels
5. U.S. Army Corps ff Engineers, 1994 Hydraulic Design of Flood Control Channels
6. Hydraulic Design Series (HDS-6)

NOTE: Other means may be used for Energy Dissipation and Stream Stability by designers as accepted by the local governing agency.

Energy dissipaters shall be designed according to the criteria and procedures defined in professionally acceptable references. Several such references include:

- United States. Department of the Interior. Bureau of Reclamation. Design of Small Dams. 1987 ed. Denver: GPO, 1987.
- United States. Department of the Interior. Bureau of Reclamation. A Water Resource Technical Publication. Engineering Monograph No. 25. Hydraulic Design of Stilling Basins and Energy Dissipaters. 1978 ed. GPO, 1978.
- Federal Highway Administration (FHA), 1983. Hydraulic Design of Energy Dissipaters for Culverts and Channels, Hydraulic Engineering Circular (HEC) No. 14.
- US Army Corps of Engineers, 1994. Hydraulic Design of Flood Control Channels, US Army Corps of Engineers Engineer Manual EM 1110-2-1601.
- Bridge Scour and Stream Instability Countermeasures Experience, Selection, and Design Guidance (Latest Edition), National Highway Institute, HEC No. 23.
- River Engineering for Highway Encroachments, Highways in the River Environment, U.S. Department of Transportation, Federal Highway Administration, Publication No. FHWA NHI 01-004, December 2001.

5606.5 Velocity within the System

The velocity within the system shall be between 3 and 20 feet per second.

5606.6 Loading

A. Cover: Minimum depth of cover shall be 18 inches.

B. Minimum Loading Conditions:

1. Live load: H-20.
2. Unit Weight of soil cover: 120 lbs/ft^3.
3. Rigid pipes shall be bedded and backfilled to provide a minimum factor of safety of 1.5 at the 0.01-inch crack loading condition.

SECTION 5607 ENGINEERED CHANNELS

5607.1 Introduction

The criteria in this section apply to open channels that are not natural. Natural channels are covered in Section 5605. New buffers and filter strips are not required because engineered channels are strictly for conveyance.

5607.2 Easements

Permanent easements shall be dedicated to the City/County for operation and maintenance of open channels that will be publicly maintained.

A. Engineered Channels: Easements shall be as wide as the top of bank width; plus 10 feet on each side. Easements shall be continuous between street rights-of-way. When an improved channel begins or ends at a point other than the right-of-way of a dedicated street, a 15-foot or wider easement graded so as to permit access by truck shall be dedicated from the end of the channel to a street right-of-way. These are minimum requirements.

   Generally, easements shall be required for swales that collect stormwater runoff from more than two acres or as required by the City/County.

B. Roadside Channels: Roadside ditches are engineered channels that are located wholly or partly within the street right-of-way. Roadside ditches in the street right-of-way do not require an easement. Otherwise, roadside ditches shall have a dedicated easement from the street right-of-way extending to five feet outside of the top of the outside bank of the channel.

5607.3 Freeboard

Freeboard shall not be required above the design headwater pool elevation at culvert entrance.

5607.4 Channel Linings

A. Minimum lining height shall be the selected design storm water profile plus at least a 0.5-foot freeboard.

B. All channel linings, except turf, shall contain provision for relieving back pressures and water entrapment at regular intervals.

C. Lining height on the outside bend of curves shall be increased by:

$$y = \frac{D}{4}$$

   Where:

   y = Increased vertical height of lining in feet

   D = Depth of design flow in feet

   Increased lining height shall be transitioned from y to zero feet over a minimum of:

   - $30 \times y$ feet downstream from the point of tangency (P.T.).
   - $10 \times y$ feet upstream from the point of curvature (P.C.).

5607.5 Lining Material

The types of lining material listed in Table 5607-1 shall be used to control damage and erosion. All riprap, grouted riprap, and gabion linings shall be designed with a filter fabric in conformance with Section 2605.2.C.2. The design of the lining material shall protect the channel for conditions up to the 1% storm. This criteria may be reduced to the 10% storm if the City/County Engineer approves and if responsibility for repair of channel linings in storms greater than 10% is clearly established.

Other types of lining materials not specifically listed in Table 5607-1 may be used when approved by the City/County Engineer.

Concrete lined open channel bottoms are prohibited, unless a waiver to this criterion is granted by the City/County Engineer.

Table 5607-1: Permissible Shear Stresses for Lining Material

Lining Category	Lining Type	Permissible Shear Stress (lbs/ft^2)
General	Erosion Control Blankets	1.55-2.35
	Turf-Reinforced Matrix (TRMs):	----
	Unvegetated:	3.0
	Vegetated:	8.0
	Geosynthetic Materials	3.01
	Cellular Containment	8.1
	Woven Paper Net	0.15
	Jut Net	0.45
	Fiberglass Roving:	---
	Single	0.60
	Double	0.85
	Straw With Net	1.45
	Curled Wood Mat	1.55
	Synthetic Mat	2.00
Vegetative	Class A (see Table 5607-2)	3.70
	Class B (see Table 5607-2)	2.10
	Class C (see Table 5607-2)	1.00
	Class D (see Table 5607-2)	0.60
	Class E (see Table 5607-2)	0.35
Gravel Riprap	25 mm	0.33
	50 mm	0.67
Rock Riprap	150 mm	2.00
	300 mm	4.00
Bare Soil	Non-Cohesive	See Figure 5607-1
	Cohesive	See Figure 5607-2

Table 5607-2: Classification of Vegetal Covers as to Degree of Retardance

Retardance Class	Cover	Condition
A	Weeping Love Grass	Excellent stand, tall (average 760 mm)
	Yellow Bluestem Ischaemum	Excellent stand, tall (average 910 mm)
B	Kudzu	Very dense growth, uncut
	Bermuda Grass	Good stand, tall (average 300 mm)
	Native Grass Mixture (little bluestem, bluestem, blue gamma, and other long and short Midwest grasses)	(Good stand, unmowed)
	Weeping lovegrass	Good stand, tall (average 610 mm)
	Lespedeza sericea	Good stand, not woody, tall (average 480 mm)
	Alfalfa	Good stand, uncut (average 280 mm)
	Weeping lovegrass	Good stand, unmowed (average 330 mm)
	Kudzu	Dense growth, uncut
	Blue Gamma	Good stand, uncut (average 280 mm)
C	Crabgrass	Fair stand, uncut 250 to 1200 mm
	Bermuda grass	Good stand, mowed (average 150 mm)
	Common Lespedeza	Good stand, uncut (average 280 mm)
	Grass-Legume mixture – summer (orchard grass, redtop, Italian ryerass, and common lespedeza)	(Good stand, uncut (150 to 200 mm)
	Centipedegrass	Very dense cover (average 150 mm)
	Kentucky Bluegrass	Good stand, headed (150 to 300 mm)
D	Bermuda grass	Good stand, cut to 60-mm height
	Common Lespedeza	Excellent stand, uncut (average 110 mm)
	Buffalo grass	Good stand, uncut (80 to 150 mm)
	Grass-legume mixture—fall, spring (orchard grass, redtop, Italian, ryegrass, and common lespedeza)	(Good stand, uncut (100 to 130 mm)
	Lespedeza sericea	After cutting to 50-mm height. Very good stand before cutting
E	Bermuda grass	Good stand, cut to height 40-mm
	Bermuda grass	Burned stubble

Note: Covers classified have been tested in experimental channels. Covers were green and generally uniform.

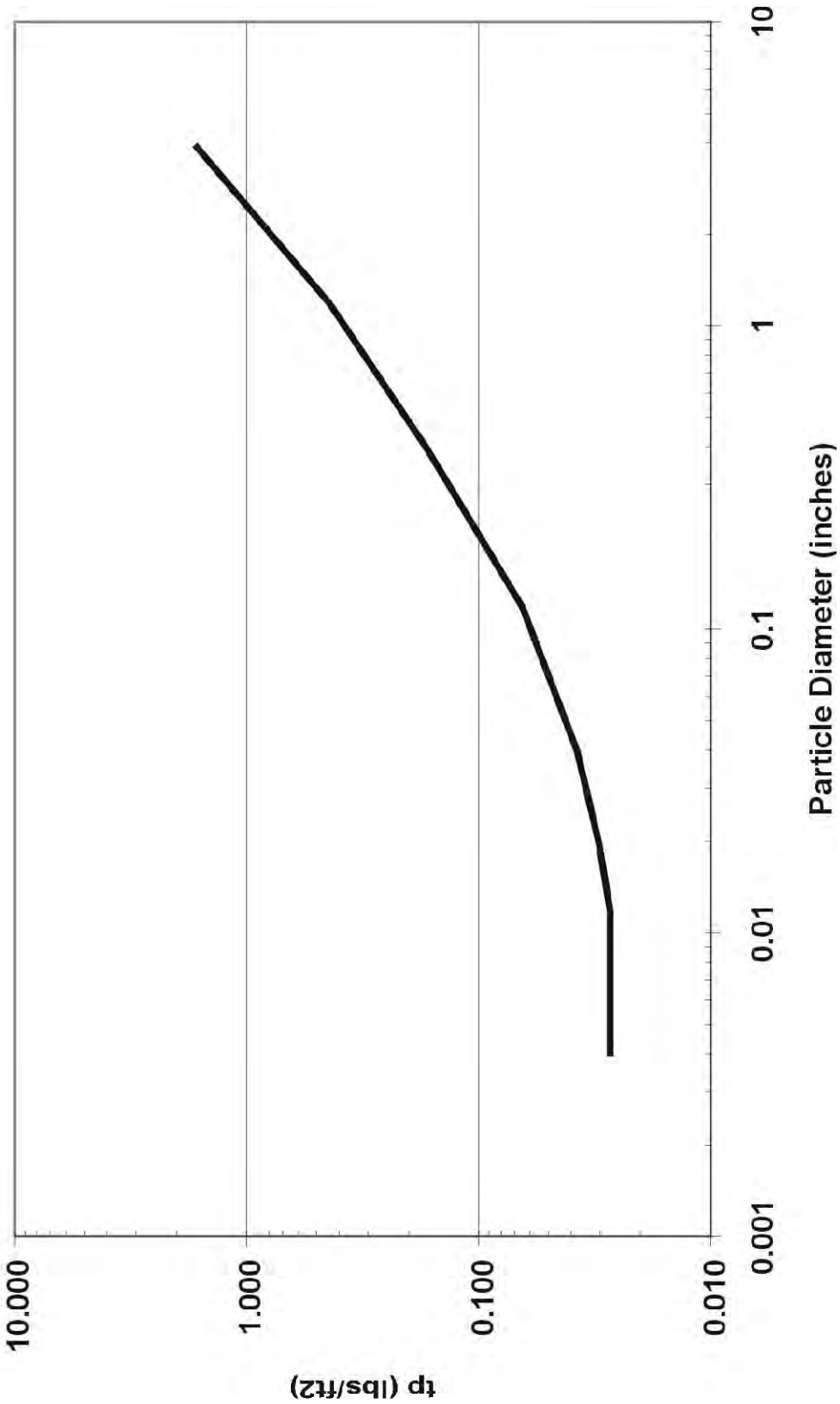

Figure 5607-1: Permissible Shear Stresses for Non-Cohesive Soils

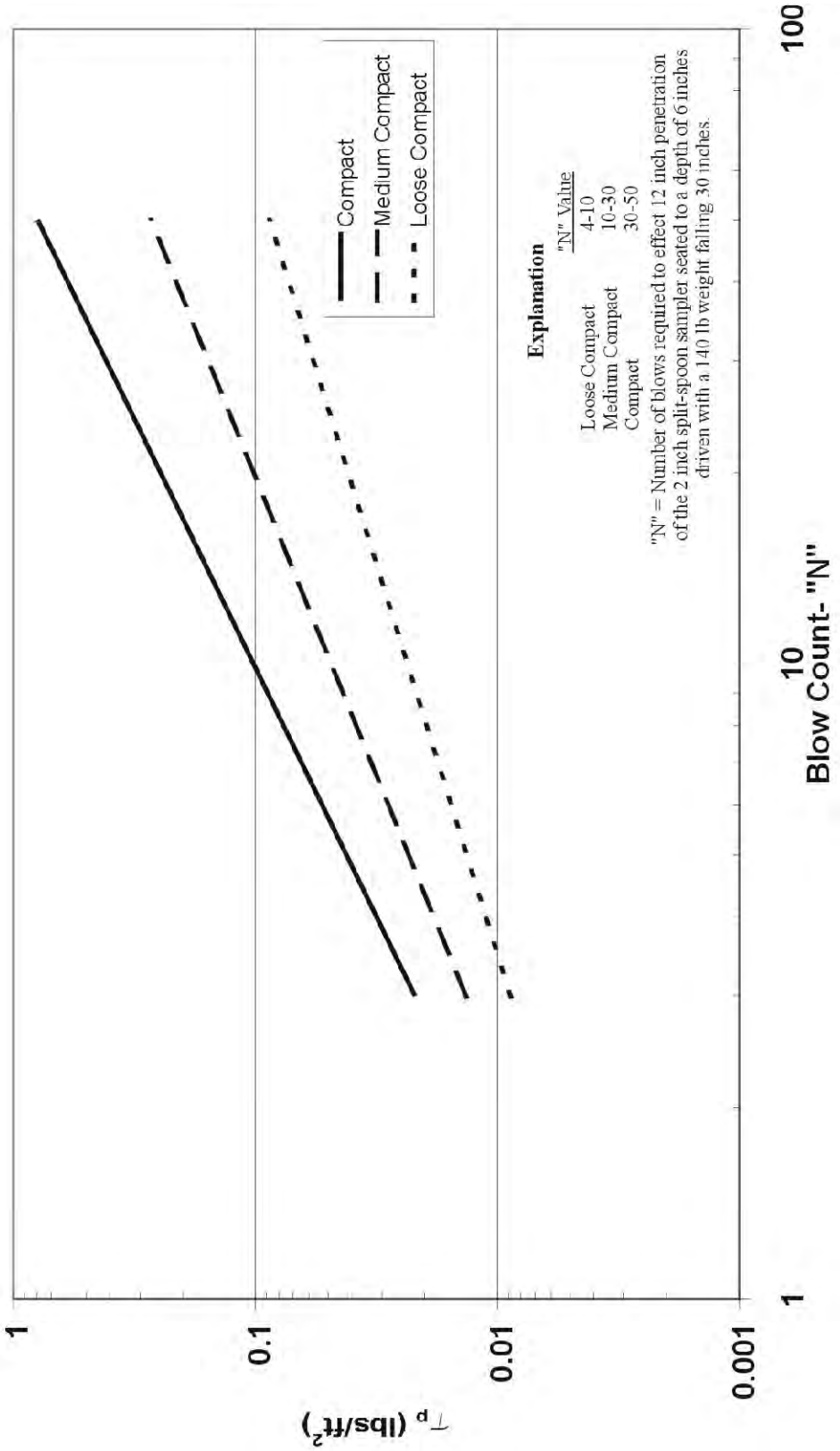

Figure 5607-2: Permissible Shear Stresses for Cohesive Soils

5607.6 Side Slopes

A. Side slopes shall not be steeper than:

1. 3 horizontal to 1 vertical for turf lining.
2. 2.5 horizontal to 1 vertical for all other lining materials, unless a geotechnical analysis indicates a steeper slope can be used.
3. Flatter if necessary to stabilize slopes.

5607.7 Alignment Changes

Alignment changes shall be achieved by curves having a minimum radius of:

$$R = \frac{V^2 \cdot W}{8D}$$

Where:

R = Minimum radius on centerline in feet

V = Design velocity of flow in feet per second

W = Width of channel at water surface in feet

D = Depth of flow in feet

5607.8 Vertical Wall Channels

A. Vertical walls may be used for structural lining of improved channels when site conditions warrant; subject to the following special requirements:

1. Walls shall be designed and constructed to act as retaining walls.
2. Adequate provisions shall be made for pedestrian entry/exit from the channel.

5607.9 Energy Management

A. Use of grade control structures can be used to manage boundary shear.

B. Energy dissipation structures should be designed in accordance with Section 5606.

SECTION 5608 STORMWATER DETENTION AND RETENTION

5608.1 Scope

This section governs the requirements and design of stormwater detention and retention facilities.

5608.2 Access and Easements

Permanent access and buffers must be provided for maintenance of a detention facility with the following minimum requirements:

A. The water surface of the design storage pool shall be a minimum of 20 feet from property lines and building structures. A greater distance may be necessary when the detention facility might compromise foundations or slope stability is a consideration.

B. A 15 foot wide access strip, with slopes less than 5 horizontal to 1 vertical, shall be provided around the perimeter of the facility, unless it can be demonstrated that all points of the facility can be maintained with less access provided.

C. The property owner shall also maintain a minimum 15 foot wide access route to the detention facility from a street or parking lot with slopes no greater than 5:1 in any direction.

D. Structures, inlet pipes, outlet pipes, spillways, and appurtenances required for the operation of the facility shall also be provided access which is no less than easement widths established in Sections 5606.1 and 5607.2.

Easements are frequently not required for detention facilities, because a detention facility is typically maintained by the property owner. If the detention facility is not maintained by the property owner or involves multiple ownerships, easements must be dedicated to the party responsible for maintenance. At a minimum the dedicated easements shall include: 1) the detention pond per se, which extends to the design storage pool elevation and the toe of the embankment slope; 2) appurtenances; and 3) access required by items B through D above.

5608.3 Maintenance and Continued Performance

Maintenance responsibility for all elements of the detention facility should be designated prior to construction of any detention facility. However, when no designation is made the property owner shall be considered the responsible party. Annual or more frequent inspections shall be made by the responsible party to assure that all inlet and outlet structures are fully functional and the detention basin has full storage capacity.

5608.4 5608.4 Performance Criteria

A. General Provisions

1. Detention/retention facilities shall have 1,000 acres or less area tributary to the facility.
2. Dams which are greater than 10 feet in height but do not fall into State or Federal requirement categories shall be designed in accordance with latest edition of SCS Technical Release No. 60, “Earth Dams and Reservoirs”, as Class “C” structures.
3. All lake and pond development must conform to local, state, and federal regulations. Legal definitions and regulations for dams and reservoirs can be found in the Missouri Code of State Regulations, Division 22, and the State of Kansas Rules and Regulations, KSA 82a-301 through 305a.

B. Computational Methods

1. Time of Concentration and Travel Time: Refer to Section 5602 for acceptable hydrology methods.
2. Temporary Storage Volume: A preliminary value of the storage requirement may be obtained through methods outlined in (SCS, 1986, Chapter 6) or other acceptable methods. The storage shall be checked during routing of design hydrographs through the basin and adjusted appropriately.

3. Hydrograph Routing: The storage indication method (Modified Puls) of routing a hydrograph through a detention basin may be utilized. Reference: (Chow, 1964). Under the Comprehensive and Frequent Event Strategies, the water quality orifice is designed to store the water quality storm and drain it within 40 hours. Routing of the other larger storms is then done independently, assuming the water quality storm is not present, but using the water quality orifice as part of the rating curve.

C. Release Rates: The maximum release rate from any development under the runoff control strategies outlined in Section 5601.5.A-4 shall be as follows:

1. Comprehensive Control

   a. Post-development peak discharge rates from the site shall not exceed those indicated below:

      - 50% storm peak rate less than or equal to 0.5 cfs per site acre
      - 10% storm peak rate less than or equal to 2.0 cfs per site acre
      - 1% storm peak rate less than or equal to 3.0 cfs per site acre

   b. 40-hour extended detention of runoff from the local 90% mean annual event (1.37"/24-hour rainfall). See Chapter 6 of the MARC/APWA BMP Manual for calculating this volume.

2. Frequent Event Control

   a. Post-development peak discharge rates from the site shall not exceed those indicated below:

      - 50% storm peak rate less than or equal to 0.5 cfs per site acre
      - 10% storm peak rate less than or equal to 2.0 cfs per site acre

   b. 40-hour extended detention of runoff from the local 90% mean annual event (1.37"/24-hour rainfall). See Chapter 6 of the MARC/APWA BMP Manual for calculating this volume.

3. Extreme Flood Event Control

   a. Post-development peak discharge rates from the site shall not exceed those indicated below:

      - 10% storm peak rate less than or equal to 2.0 cfs per site acre
      - 1% storm peak rate less than or equal to 3.0 cfs per site acre

      Note: If known flooding occurs downstream in flood events more frequent than the 1% event, the local authority may require control of these events.

D. Detention Basin Size

1. Owners/engineers may utilize methodology outlined in (SCS, 1986). A 24-hour Type II rainfall distribution shall be the required storm hyetograph. Hydrologic simulation models shall be based on not less than Antecedent Moisture Condition II (see Section 5602.2). Maximum detention storage shall be based upon the allowable release rate and upon the developed condition for the site. Cities and Counties may establish additional standards for other storm sizes in order to provide stream channel and water quality protection.

2. Detention Storage Reduction with Upstream BMPs: When volumetric control BMPs are implemented on a site, the volume captured by these BMPs may be deducted from the site detention volume required for the 90% mean annual event under the "Frequent Event" and "Comprehensive" control designs. Volumetric BMPs are defined as those BMPs in the MARC/APWA BMP Manual that infiltrate or provide 40-hour extended detention of the 90% mean annual event runoff (or water quality volume, WQ_v). Volumetric BMPs (per Chapter 4 of the MARC/APWA BMP Manual) include:

   - Bioretention

- Rain gardens
- Infiltration basins and trenches
- Bio-swales and wetland swales
- Extended detention facilities (including wetlands)
- Permeable pavement

E. Primary Outlet Works: The primary outlet shall be designed to meet the following requirements:

1. The outlet shall be designed to function without requiring attendance or operation of any kind or requiring use of equipment or tools, or any mechanical devices.
2. All discharge from the detention facility when inflow is equal to or less than the maximum design storm under the required Strategy shall be via the Primary outlet system.
3. The design discharge rate via the outlet shall continuously increase with increasing head and shall have hydraulic characteristics similar to weirs, orifices or pipes.
4. For dry detention basins not providing extended detention, the design shall allow for discharge of at least 80 percent of the detention storage volume within 24 hours after the peak or center of mass of the inflow has entered the detention basin.
5. Ponds shall be designed with a non-clogging outlet such as a reverse-slope pipe, or a weir outlet with a trash rack. A reverse-slope pipe draws from below the permanent pool extending in a reverse angle up to the riser and establishes the water elevation of the permanent pool. Because these outlets draw water from below the level of the permanent pool, they are less likely to be clogged by floating debris.
6. All openings shall be protected by trash racks, grates, stone filters, or other approved devices to insure that the outlet works will remain functional. Minimum orifice size shall be per the current version MARC/APWA BMP Manual. See MARC/APWA BMP Manual Sections 8.6, 8.10 and 8.12 for design guidance and typical details for low-flow outlets and trash rack designs. Note that multiple design options are available for non-clogging low flow outlets and debris collection and designers are encouraged to select the best design for their site.

F. Emergency Spillways: The emergency spillway may either be combined with the outlet works or be a separate structure or channel meeting the following criteria:

1. Elevation: Emergency spillways shall be designed so that their crest elevation is 0.5 feet or more above the maximum water surface elevation in the detention facility attained by the maximum design storm under the required Strategy for the facility.
2. Capacity: In cases where the impoundment/emergency spillway is not regulated by either State or Federal agencies, the emergency spillway shall be designed to pass the 1% storm with 1 foot of freeboard from the design stage to the top of dam, assuming zero available storage in the basin and zero flow through the primary outlet. This design provides an added level of protection in the event of a clogged primary outlet or a subsequent 1% storm event that occurs before the flood pool from the initial storm event recedes to the principal outlet elevation.

G. Drawdown Provision: Drain works consisting of valves, gates, pipes, and other devices as necessary to completely drain the facility in 72 hours or less when required for maintenance or inspection shall be provided.

H. Erosion Control: Primary outlet works, emergency spillways, and drain works, as well as conveyance system entrances to detention basins, shall be equipped with energy dissipating devices as necessary to limit shear stresses on receiving channels. See Tables 5605-2 and 5606-2 for shear stress criteria.

5608.5 Detention Methods:

In addition to the foregoing criteria, the following shall be applicable, depending on the detention alternative(s) selected:

A. Wet Detention Facility: For basins designed with permanent pools:

1. Sediment Forebay: A sediment forebay shall be provided to trap coarse particles. Refer to the "Mid-America Regional Council and American Public Works Association; Manual for Best Management Practices for Stormwater Quality" for typical design specifications and configurations of sediment forebays.
2. Minimum Depth: The minimum normal depth of water before the introduction of excess stormwater shall be four feet plus a sedimentation allowance of not less than 5 years accumulation. Sedimentation shall be determined in accordance with the procedures shown in Figure 5608-1.
3. Depth for Fish: If the pond is to contain fish, at least one-quarter of the area of the permanent pool must have a minimum depth of 10 feet plus sedimentation allowance.
4. Side Slopes: The side slopes shall conform as closely as possible to regraded or natural land contours, and should not exceed three horizontal to one vertical. Slopes exceeding this limit shall require erosion control and safety measures and a geotechnical analysis.
5. 5. Refer to the MARC/APWA BMP Manual for design requirements on facilities providing control of the WQv (Comprehensive and Frequent Event Strategies).

B. Dry Detention Facility: For basins designed to be normally dry:

1. Interior Drainage for non-BMP basins: Provisions must be incorporated to facilitate interior drainage to outlet structures. Grades for drainage facilities shall not be less than two percent on turf.
2. Earth Bottoms: Earth bottoms shall be vegetated.
3. Side Slopes: The side slopes of dry ponds should be relatively flat to reduce safety risks and help to lengthen the effective flow path. Slopes shall not be steeper than three horizontal to one vertical and at least 25% of the perimeter shall have a slope of 5 to 1 or flatter.
4. Refer to the MARC/APWA BMP Manual for design requirements on facilities providing control of the WQv (Comprehensive and Frequent Event Strategies).

C. Rooftop Storage: Detention storage may be met in total or in part by detention on roofs. Details of such designs shall include the depth and volume of storage, details of outlet devices and down drains, elevations and details of overflow scuppers, and emergency overflow provisions. Connections of roof drains to sanitary sewers are prohibited. Design loadings and special building and structural details shall be subject to approval by the City/County Engineer.

D. Parking Lot Storage: Paved parking lots may be designed to provide temporary detention storage of stormwater on a portion of their surfaces. Generally, such detention areas shall be in the more remote portions of such parking lots. Depths of storage shall be limited to a maximum depth of nine inches, and such areas shall be located so that access to and from parking areas is not impaired.

E. Other Storage: All or a portion of the detention storage may also be provided in underground or surface detention areas, including, but not limited to, oversized storm sewers, vaults, tanks, swales, etc.

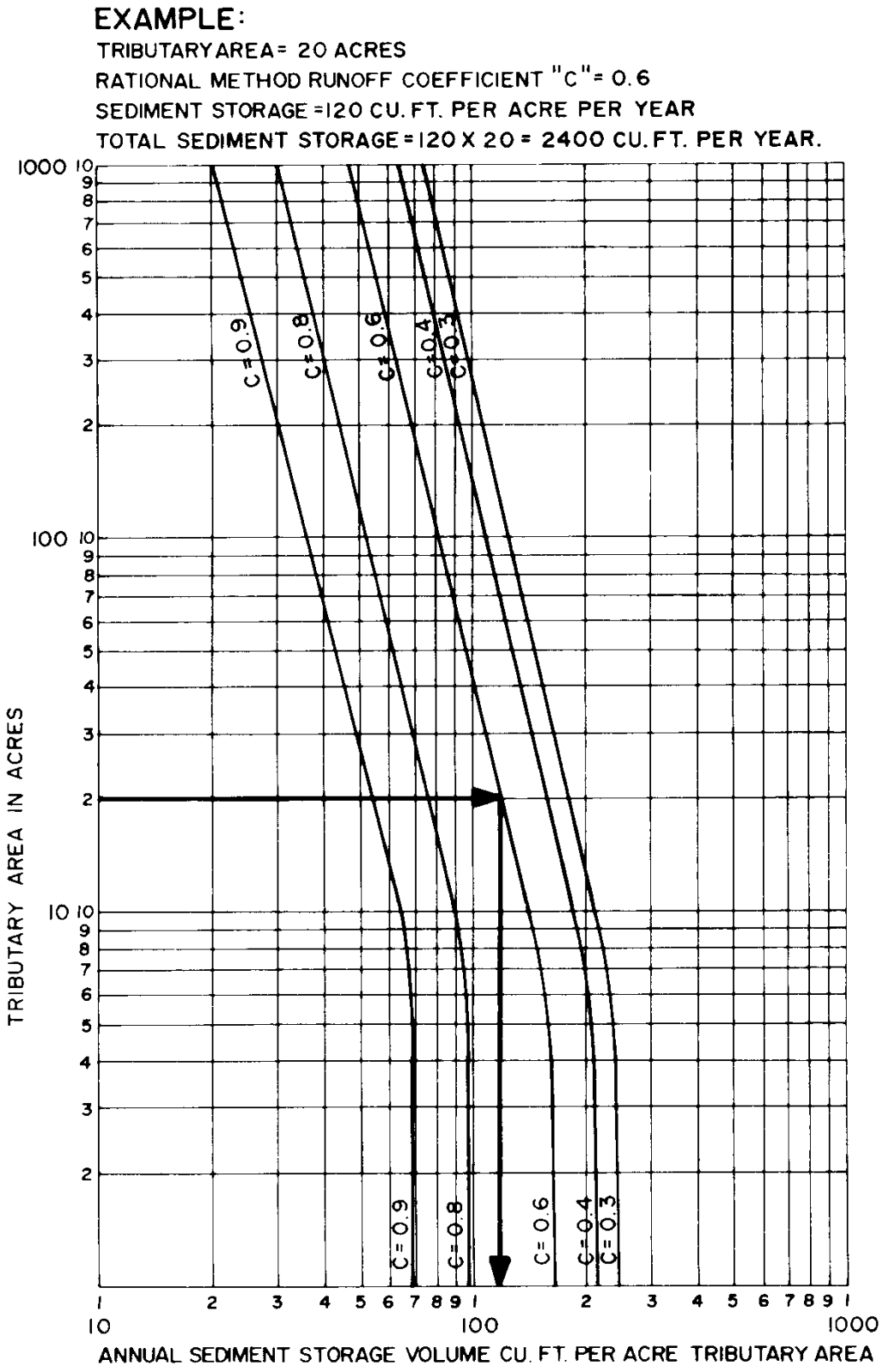

Figure 5608-1: Annual Sediment Storage

5608.6 Required Submittals:

A. The Owner shall submit the following information and data to the City/County Engineer.

1. Elevation-area-volume curves for the storage facility including notation of the storage volumes allocated to runoff, sediment, and permanent residual water storage for other uses (wet basins only).
2. Inflow hydrographs for all (1, 10, and 50-percent) design storms.
3. Stage-discharge rating curves for each emergency spillway, primary outlet works and combined outlets and overflows.
4. Routing curves for all (1, 10 and 50-percent) design storms with time plotted as the abscissa and the following plotted as ordinates:
   - Cumulative inflow volume
   - Cumulative discharge
   - Stage elevation
   - Cumulative storage
5. Drainage Study when a waiver is requested by the Developer. See Section 5609 for minimum requirements.

5608.7 Additional Requirements

A. Access: Provisions shall be made to permit access and use of auxiliary equipment to facilitate emptying, cleaning, maintenance, or for emergency purposes.

B. Underground Storage: Underground detention facilities shall be designed with adequate access for maintenance (cleaning and sediment removal). Such facilities shall be provided with positive gravity outlets. Venting shall be sufficient to prevent accumulation of toxic or explosive gases.

SECTION 5609 PLAN REQUIREMENTS

5609.1 Scope

The section governs the preparation of plans for stormwater system projects.

5609.2 General

The plans shall include all information necessary to build and check the design of storm drainage systems and related appurtenances. The plans shall be arranged as required by the City Engineer of local governing agency. Applicable standard plans of the local governing agency may be included in whole or by reference.

Plans shall be sealed by a Registered Professional Engineer in the state of the City or governing agency and shall be submitted to the local governing agency for review.

5609.3 Type of Sheets in Plans

The plans shall consist of:

- Title sheet
- General layout sheets
- Plan and profile sheets
- Cross-section sheets
- Drainage area map and table
- Standard and special detail sheets
- Traffic control plans (if required)
- Temporary erosion control plans
- Grading plans (if required)
- Property line and easement sheets (if required)
- Each sheet shall contain a sheet number, including the individual sheet number and the total number of sheets, proper project identification and all revision dates. The
- Engineer's seal shall appear on the title sheet and other sheets as required by the State licensing requirements.

5609.4 Sheet Sizes

The suggested sheet size is 22 inches by 36 inches with 2 inch binding margin along the left end of the sheets. All sheets in a given set of plans shall be of the same size. Plan and profile shall be drawn on combined or separate plan and profile sheets to minimum scales indicated herein.

5609.5 Scales

Plans shall be drawn at the minimum scales indicated in Table 5609-1. Other scales may be needed to clearly present the design. Bar Scales shall be shown on each sheet for each scale.

Table 5609-1: Drawing Scales

Drawing Type	Scale
Plan	1 inch = 20 feet
Profile	
Vertical	1 inch = 5 feet
Horizontal	1 inch = 20 feet
Cross Sections	
Vertical	1 inch = 5 feet
Horizontal	1 inch = 10 feet
Drainage Area Map	
Onsite	1 inch = 200 feet
Offsite	1 inch = 1,000 feet
Structural Plans	¼ inch = 1 foot

5609.6 Required Information for Title Sheet:

- Name of project
- Project number
- Index to sheets
- A location map adequately showing the project location in relation to major streets, with north arrow and scale. Map shall be oriented with north arrow up
- A signature block for local governing agency approval
- Name, address and telephone number of the consulting engineer and owner/developer as well as signature block for the owner/developer
- A legend of symbols shall be shown that apply to all sheets
- List containing name and telephone number of each utility company and state One-Call system
- Engineer's seal, signed and dated
- Other information as per local governing agency requirements

5609.7 Required Information for General Layout Sheet:

- General Notes: Minor construction notes shall appear on the proper plans and profile sheets
- North arrow and bar scale. North arrow shall be oriented up or to the right
- Surveyed or aerial base map detail indicating existing man-made or natural topographical features, such as buildings, fences, trees, channels, ponds, streams, etc… and proposed and existing utilities
- Subdivision information including, but not limited to, rights-of-way; property and lot lines; existing and proposed easements; subdivision nomenclature; street names; and other pertinent information impacting the project
- Identification and location of all existing and proposed drainage features
- Elevation and location of all applicable benchmarks: NGVD datum or as required by local governing agency. A minimum of two (2) benchmarks are required for each project

- Survey control line or base line with adequate ties to land lines
- Locations of test borings if taken
- Existing and finish grade contours at intervals of 2.0 feet or less in elevation; or equivalent detail indicating existing and finish grades and slopes
- A uniform set of symbols subject to the approval of the local governing agency
- Addresses of homes abutting the projects, and current homeowner names associated with properties impacted by the project

5609.8 Required Information for Plan and Profile Sheets:

- North arrow and bar scale. North shall be oriented up or to the right
- Ties to permanent reference points for each system
- A uniform set of symbols subject to the approval of the local governing agency
- Existing man-made and natural topographic features, such as buildings, fences, trees, channels, ponds, streams, etc., and all existing and proposed utilities
- Identification and location of each storm drainage segment and existing utilities affecting construction
- Length, size and slope of each line or channel segment. The profile shall indicate the hydraulic grade line of the underground as well as the overland design flows
- Right-of-Way, property, easement lines and street names
- The 1 percent floodplain and setback from the top of bank of an open channel to any building
- Location of test borings
- Existing and finish grade contours at intervals of 2.0 feet or less in elevation; or equivalent detail in profiles and cross-sections indicating existing and finish grading
- Headwater elevation at the inlet end of each culvert
- Invert elevations in and out and top elevations of each structure shall be shown. At least two elevations shall be shown for inlet tops matching sloped grades
- Each utility line crossing the alignment shall be properly located and identified as to type, size and material. This information shall be to the best information available and provided through records, field prospecting and or excavation
- Test borings representing depth of drilled hole and refusal elevation if applicable
- All station and invert elevations of manholes, junction boxes, inlets and other significant structures
- The profile shall show existing grade above the centerline as a dashed line, proposed Finish grades or established street grades by solid lines; and shall show the flow line of any drainage channel, either improved or unimproved, within 50-feet of either side of centerline. Each line shall be properly identified. The proposed sewer shall be shown as double solid lines properly showing the top and bottom of pipe
- All structures shall be shown and labeled with appropriate drawing references

5609.9 Cross-Section Sheets

Cross-sections shall be drawn for all open channels. Sections shall be at appropriate intervals not greater than 50 feet. Additional cross sections shall be drawn at all structures and intersecting drainage systems. Cross sections

shall also provide for overflow drainage paths that are designated to convey overland flows in excess of underground system capacity. The following shall be indicated on each section:

- Ties form centerline to base line.
- Existing and proposed grades.
- Elevation of proposed flow-lines.
- Cut and fill end areas if required for bid quantities.

5609.10 Drainage Area Map

The drainage area map shall be supported by a drainage table tabulating the physical properties of the drainage sub-basins, as well as the hydrologic and hydraulic properties of the design. The drainage map shall have the following.

- North arrow and bar scale. North shall be oriented up or to the right.
- Drainage area boundaries for all watersheds including sub-watersheds of analysis including pass through waters, inlet drainage areas, culvert drainage areas and other points of interest..
- Drainage system nomenclature matching that on the "designed" systems shown in the plans.

5609.11 Standard and Special Detail Sheets

Detail sheets shall be included to show all details of appurtenances, materials and construction. Details shall conform to the requirements of the local governing agency and are to be drawn clearly and neatly with proper identifications, dimensions materials and other information necessary guide desired construction.

5609.12 Traffic Control Plans (if required)

Traffic control plans shall conform to design and principals contained the most recent copy of Manual of Uniform Traffic Control Devices (MUTCD).

5609.13 Temporary Erosion Control Plan Sheets

- Each temporary erosion control feature designation shall be shown in its proper location on the plans
- Temporary erosion control devices shall be detailed in the plans as necessary.
- Notes shall be included in the plans indicating that the erosion control systems shall be monitored throughout the project life and maintained and adjusted as necessary to control erosion.
- Erosion control plans shall be shown and be designed specific to each phase of development or construction.

5609.14 Grading Plan Sheets (if required)

Grading plan sheets shall be included as required by the local governing agency. The grading plans shall incorporate information concerning the changes in the land geometry to accommodate the development. It shall include but not be limited to existing and proposed contours, building elevations, curb elevations, retaining wall elevations and other information pertinent to the site.

5609.15 Property Line and Easement Sheets

Separate property line and easement sheets may be required by the local governing agency. The information on this sheet shall be sufficient to display the existing and proposed property line and easement changes relative to the project.

SECTION 5610 REFERENCES

Alexander, T.T., and Wilson, G.L., 1995, Technique for Estimating the 2- to 500- Year Flood Discharges on Unregulated Streams in Rural Missouri: U.S. Geological Survey Water-Resources Investigations Report 95-4231, 33 p.

Becker, L.D., 1986, Techniques for Estimating Flood-Peak Discharges from Urban Basins in Missouri: U.S Geological Survey Water-Resources Investigations Report 86-4322, 38 p.

Castro, J., 1999 Design of Stream Barbs, USDA, NRCS, Engineering Technical Note No. 23.

Center for Watershed Protection, Site Planning for Urban Stream Protection", http://www.cwp.org/SPSP/TOC.htm

Chow, V.T., 1988. Open-Channel Hydraulics, McGraw-Hill Book Publishing Company.

Chow, V.T., 1964. Handbook of Applied Hydrology, McGraw-Hill Book Publishing Company.

Federal Highway Administration (FHA), 1989. Design of Rip-Rap Revetment. Hydraulic Engineering Circular (HEC) No. 11.

Federal Highway Administration (FHA), 1983. Hydraulic Design of Energy Dissipaters for Culverts and Channels, Hydraulic Engineering Circular (HEC) No. 14.

Federal Highway Administration (FHA), 1996. Urban Drainage Design Manual, Hydraulic Engineering Circular No. 22.

Federal Interagency Stream Restoration Working Group, (Interagency) 1998 with Addenda 2001. Stream Corridor Restoration: Principles, Processes and Practices – Stream Corridor Restoration Handbook.

Gray, D.H. and R.B. Sotir, 1996. Biotechnical and Soil Bioengineering Slope Stabilization, John Wiley and Sons.

Heraty, M., Herson-Jones, L.M. and B. Jordan, 1995, Riparian Buffer Strategies for Urban Watersheds, Metropolitan Washington Council of Governments.

Johnson, P.A., 2002. Incorporating Road Crossings into Stream and River Restoration Projects, Ecological Restoration, Vol.20, No.4.

Johnson, P. A., G. L. Gleason, and R. D. Hey, 1999. Rapid Assessment of Channel Stability in Vicinity of Road Crossings, ASCE, Journal of Hydraulic Engineering, Vol. 125, No. 6.

Lane, E.W., 1955. The Importance of Fluvial Morphology in Hydraulic Engineering, Proceedings of the American Society of Civil Engineers, vol. 81, no. 795, 17p.

Leopold, LB., M.G. Wolman, and I.P. Miller, 1964. Fluvial Processes in Geomorphology, W. H. Freeman and Co.

McEnroe, Bruce M. and Hongying Zhao (2001). Lag Times of Urban and Developing Watersheds in Johnson County, Kansas. Report No. K-TRAN: KU-99-5, Kansas Department of Transportation.

McEnroe, Bruce M. and Gonzalez Pablo (2002). Storm Durations and Antecedent Moisture Conditions for Flood Discharge Estimation, Kansas. Report No. K-TRAN: KU-02-04, Kansas Department of Transportation.

National Academy of Sciences, 1999, Riparian Zones: Function and Strategies for Management, WSTB –U-98-01-A.

Newbury, R.M., M.Gaboury and C. Watson, 1997. Field Manual of Urban Stream Restoration, Illinois Water Survey. Available from Conservation Technology Information Center, IN.

Rasmussen, Patrick P. and Charles A. Perry (2000). Estimation of Peak Streamflows for Unregulated Rural Streams in Kansas. Water-Resources Investigations Report 00-4079, U.S. Geological Survey.

Sauer, V.B., Thomas, W.O., Jr., Stricker, V.A, and Wilson, K.V., 1983, Flood Characteristcs o Urban Watersheds in the United States: U.S. Geological Survey Water-Supply Paper 2207, 63 p.

Thomas, D.B., S.R. Abt, R.A. Mussetter, and M.D. Harvey, 2000. A Design Procedure for Step Pool Structures, Procedures Water Resources Engineering and Water Resources Planning and Management, American Society of Civil Engineers.

Urban Water Resources Research Council, 1992. Design and Construction of Urban Stormwater Management Systems, ASCE Manuals and Reports of Engineering Practice No. 77, WEF Manual of Practice, FD-20, American Society of Civil Engineers and the Water Environment Federation.

US Army Corps of Engineers, 1989. Sedimentation Investigations of Rivers and Reservoirs, US Army Corps of Engineers Engineer Manual EM 1110-2-4000.

US Army Corps of Engineers, 1989. Environmental Engineering for Flood Control Channels, US Army Corps of Engineers Engineer Manual EM 1110-2-1205.

US Army Corps of Engineers, 1993. River Hydraulics, US Army Corps of Engineers Engineer Manual EM 1110-2-1416.

US Army Corps of Engineers, 1994. Channel Stability Assessment for Flood Control Projects, US Army Corps of Engineers Engineer Manual EM 1110-2-1418.

US Army Corps of Engineers, 1994. Hydraulic Design of Flood Control Channels, US Army Corps of Engineers Engineer Manual EM 1110-2-1601.

US Army Corps of Engineers, 1998, HEC-RAS River Analysis System, Hydrologic Engineering Center.

US Army Corps of Engineers, R.R. Copeland, D.N. McComas, C.R. Thorne, P. J. Soar, M.M. Jonas and J.B. Fripp, 2001. Hydraulic Design of Stream Restoration Projects, ERDC/CHL TR-01-28.

US Department of Agriculture. 1999. Design of Streambarbs, Technical Note No. 23.

US Department of Agriculture. Forest Service. C.C. Harrelson, C.L. Rawlins, J.P. Potyondy. Stream Channel Reference Sites: An Illustrated Guide to Field Technique. Rocky Mountain Forest and Range Experiment Station, General Technical Report RM-245. 1994. Available at http://www.stream.fs.fed.us/publications/documentsStream.html.

US Department of Agriculture Soil Conservation Service (NRCS), 1996. Stream bank and Shoreline Protection, Chapter 16, US Department of Agriculture Soil Conservation Service Engineering Field Handbook.

US Department of the Interior, Bureau of Reclamation, 1974. Design of Small Dams, US Government Printing Office.

US Department of the Interior. Bureau of Reclamation. 1978. A Water Resource Technical Publication. Engineering Monograph No. 25. Hydraulic Design of Stilling Basins and Energy Dissipaters. GPO.

US Soil Conservation Service (SCS). June 1986 Technical Release No. 55 "Urban Hydrology for Small Watersheds", 2nd Edition.

US Soil Conservation Service (SCS). August 1981. Technical Release No. 60, "Earth Dams and Reservoirs", as Class "C" structures.

Wegner, S., 1999. A Review of the Scientific Literature on Riparian Buffer Width, Extent and Vegetation, Institute of Ecology, University of Georgia.

WEST Consultants, Inc., 1996. Riprap Design System.

Williams P.B., Swanson, M.L., 1989. A New Approach to Flood Protection Design and Riparian Management, US Department of Agriculture Forest Service General Technical Report PSW-110, pp. 40-45

APPENDIX A

Microsoft Visual Basic Function for Inlet Interception Calculations

The following is a Microsoft Visual Basic function that can be added to a Microsoft Excel (97 or later) worksheet or template for inlet intercept calculations.

```
Function InletIntercept(slope, Qt, Optional CrossSlope = 2, _
                        Optional Length = 4#, Optional CurbType = "A",
_
                        Optional Metric = False)
'
' InletIntercept Macro
' Determine the intercept ratio for setback curb
' inlets given length of opening, q, slope and cross slope
' All inputs in english units.
' Function written 04/19/1999 by Michael S. Ross
'
Dim a As Double, b As Double, c As Double, d As Double
Dim x As Double, Qo As Double, Qa As Double
Dim strAlert As String

CurbType = UCase(CurbType)
If CurbType <> "A" And CurbType <> "B" Then
    strAlert = "Curb type must be one of 'A' or 'B'. 'A' assumed. "
    CurbType = "A"
End If
If slope >= -0.00001 And slope <= 0.00001 Then
    InletIntercept = Qt
Else
Select Case CurbType
Case "A"
    Select Case CrossSlope
    Case 2
        If Metric Then
            a = -0.12
            b = 0.03
            c = 1.07
            d = 0.24
            x = -0.7
        Else
            a = -0.4
            b = 0.1
            c = 3.5
            d = 0.8
            x = -0.7
        End If
    Case 4
        If Metric Then
            a = -0.09
            b = 0.09
            c = 1.31
            d = 0.76
            x = -0.8
        Else
```

```
            a = -0.3
            b = 0.3
            c = 4.3
            d = 2.5
            x = -0.8
        End If
    Case Else
        strAlert = strAlert & "Cross slope must be either 2% or 4%," &
_
                    "other cross slopes were not modelled. Assuming 2%.
"
        If Metric Then
            a = -0.12
            b = 0.03
            c = 1.07
            d = 0.24
            x = -0.7
        Else
            a = -0.4
            b = 0.1
            c = 3.5
            d = 0.8
            x = -0.7
        End If
    End Select
Case "B"

    Select Case CrossSlope
    Case 2
        If Metric Then
            a = 0.3
            b = 0#
            c = 0.98
            d = 0.52
            x = -0.5
        Else
            a = 1#
            b = 0#
            c = 3.2
            d = 1.7
            x = -0.5
        End If
    Case 4
        If Metric Then
            a = 0.46
            b = 0.15
            c = 0.79
            d = 0.58
            x = -0.5
        Else
            a = 1.5
            b = 0.5
```

```
            c = 2.6
            d = 1.9
            x = -0.5
        End If
    Case Else
        strAlert = strAlert & "Cross slope must be either 2% or 4%," &
_
                    "other cross slopes were not modelled. Assuming 2%.
"
        a = 1#
        b = 0#
        c = 3.2
        d = 1.7
        x = -0.5
    End Select
End Select
Qo = (a + (b * Length)) * (slope) ^ x
Qa = (c + (d * Length)) * (slope) ^ x
If Qt <= Qo Then
    InletIntercept = Qt
Else
    InletIntercept = Qo + (Qa - Qo) * (1 - Exp(-((Qt - Qo) / (Qa -
Qo))))
End If
End If
If strAlert <> "" Then MsgBox strAlert, vbExclamation
End Function
```

SECTION 5700 – STRUCTURES

CITY OF LEE'S SUMMIT, MISSOURI
DESIGN CRITERIA

The City of Lee's Summit hereby adopts Section 5700 of the Kansas City Metropolitan Chapter of APWA Design Criteria, current edition.

DIVISION V
DESIGN CRITERIA

SECTION 5700 STRUCTURES

Approved and Adopted this 17th day of December, 1986

Kansas City Metropolitan Chapter
of the American Public Works Association

Section	Title	Page No.
5701	**GENERAL**	57-1
5701.1	Purpose	57-1
5701.2	Scope	57-1
5701.3	Definitions	57-1
5701.4	Abbreviations	57-2
5702	**GOVERNING SPECIFICATIONS**	57-3
5702.1	Roadway Bridges and Miscellaneous Structures	57-3
5702.2	Railway Bridges	57-3
5702.3	Light Rail - Mass Transit	57-3
5702.4	Inspection, Rating and Posting - Bridges	57-3
5702.5	Welding	57-3
5703	**GEOMETRICS**	57-3
5703.1	Geometric Standards	57-3

5703.2 Horizontal Clearances 57-4
5703.3 Vertical Clearances 57-4
5703.4 Other 57-4

5704 **BRIDGE SUPERSTRUCTURES** 57-5
5704.1 Lane Widths 57-5
5704.2 Railings 57-5
5704.3 Traffic Barriers 57-5
5704.4 Sidewalks 57-5
5704.5 Bikeways 57-5
5704.6 Bridge Decks 57-6
5704.7 Structural Systems 57-9

5705 **BRIDGE SUBSTRUCTURES** 57-12
5705.1 Type 57-12
5705.2 Location 57-12
5705.3 Foundation Requirements 57-12
5705.4 Frost Depth 57-14
5705.5 Scour 57-14
5705.6 Collision Protection 57-14
5705.7 Berms at Abutments 57-14
5705.8 Slope Protection at Abutments 57-14
5705.9 Maximum End Slope 57-14
5705.10 Abutment Wingwalls 57-14
5705.11 Superstructure Storm Drainage 57-15
5705.12 Abutment Backfill 57-15
5705.13 Fixity 57-15
5705.14 Substructure Concrete 57-15
5705.15 Reinforcing Steel 57-15
5705.16 Structural Steel 57-15

5706 **LOADINGS** 57-15
5706.1 General 57-15
5706.2 Dead Load 57-16
5706.3 Future Dead Load 57-16
5706.4 Live Load 57-16

5706.5 Impact 57-16
5706.6 Wind Loads 57-16
5706.7 Longitudinal Forces 57-16
5706.8 Seismic Loads 57-17
5706.9 Other Forces 57-17
5706.10 Sidewalk, Curb and Railing Loading 57-17
5706.11 Unusual Vehicle Loads 57-17

5707 **ROADWAY DRAINAGE** 57-18
5707.1 General 57-18
5707.2 Design Considerations, Deck Drainage 57-18
5707.3 Discharge 57-18

5708 **FLOODWAY HYDRAULICS-URBAN AREAS** 57-18
5708.1 General 57-18
5708.2 Flood Design Frequency 57-19
5708.3 Backwater Control 57-19
5708.4 Erosion Protection 57-19

5709 **EVALUATION OF EXISTING STRUCTURES** 57-20
5709.1 Scope 57-20
5709.2 Posting 57-20
5709.3 Sufficiency Rating for Metro Area 57-21

5710 **MISCELLANEOUS STRUCTURES** 57-21
5710.1 Scope 57-21
5710.2 Retaining Walls 57-21
5710.3 Curb Inlets, Field Basins and Junction Boxes 57-23
5710.4 Areaways 57-24
5710.5 Reinforced Concrete Box Culverts 57-25

5711 **PLAN REQUIREMENTS** 57-27
5711.1 Scope 57-27
5711.2 General 57-27
5711.3 Scales 57-27
5711.4 Required Information 57-28

DIVISION V
DESIGN Criteria

SECTION 5700 STRUCTURES

SECTION 5701 GENERAL

5701.1 Purpose: The purpose of this Criteria is to provide standardization in the Metropolitan Kansas City Area for the Public Works structures which are designed and constructed for the many separate municipal and county jurisdictions included therein.

5701.2 Scope: This Criteria is intended to cover the bridges, culverts, retaining walls and other miscellaneous structures routinely addressed within the various jurisdictions. Bridges included herein are limited to short and moderate span structures. This Criteria may be used for guidance in the design of long span structures, however, the designer shall be responsible for addressing the numerous items unique to the proper design of long span bridges. Patented and proprietary systems are not included in this Criteria but may be appropriate for site conditions. It is not the intent of this Criteria to exclude such systems from consideration or use.

5701.3 Definitions:

A. **City Engineer:** The term City Engineer, as used in this Criteria, shall represent the state, county, city or other governmental body's representative responsible for technical decisions concerning the project. Such person may be the Director of Public Works, City or County Engineer, Administrator or any other person empowered by the governing agency to make such decisions.

B. **Engineer:** The term Engineer, as used in this Criteria, shall represent the Engineer or Designer who performs the actual design work. Nothing in this Criteria is intended to alter or circumvent local, state, or federal laws or regulations regarding liability and/or responsibility for such designs.

C. **Bridge:** A structure, spanning 20-feet or greater between abutment faces, providing a means of transit for pedestrians and/or vehicles above the land and/or water surface of a valley, river, stream, lake, canal, above a road, highway, railway or other obstruction, whether natural or artificial.

In general, the essential parts of a bridge are: (1) the substructure consisting of its abutments and pier or piers supporting the superstructure, (2) the superstructure slab, girder, truss, arch or other span or spans supporting the roadway loads and transferring them to the substructure, and (3) the roadway and its incidental parts functioning to receive and transmit traffic loads.

D. **Culvert:** A small structure, spanning less than 20-feet between abutment faces, normally below the elevation of the roadway surface.

E. **Curb Inlet:** A cast-in-place or precast structure constructed adjacent to or integral with the curb section of a street or highway to provide means for rain or other water accumulated upon the roadway surface to drain through it onto an open space or drainage system below the structure.

F. **Areaway:** Special structurally enclosed area under a street or sidewalk designed to function as part of a building.

G. **Retaining Wall:** A structure designed to restrain and hold back a mass of earth or other fill material.

5701.4 Abbreviations:

AASHTO	**American Association of State Highway and Transportation Officials**
ACI	**American Concrete Institute**
AISC	**American Institute of Steel Construction**
ASTM	**American Society for Testing and Materials**
ANSI	**American National Standards Institute**
APWA	**American Public Works Association**
AREA	**American Railway Engineering Association**
AWS	**American Welding Society**
AWPA	**American Wood Preservers Association**
CRSI	**Concrete Reinforcing Steel Institute**
FHWA	**U.S. Department of Transportation/Federal Highway Administration**
NDS	**National Design Specifications for Stress Grade Lumber and Its Fastenings**
NFPA	**National Forest Products Association**
PCI	**Prestressed Concrete Institute**
WPA	**Western Pine Association**
WWPA	**Western Wood Products Association**

SECTION 5702 GOVERNING SPECIFICATIONS

5702.1 Roadway Bridges and Miscellaneous Structures: Design shall be in accordance with the latest edition of the following specifications and the current interim supplements thereto except as modified herein or modified for the specific project:

A. **Standard Specifications for Highway Bridges, AASHTO.**

B. **A Policy on Geometric Designs of Highways and Streets, AASHTO.**

5702.2 Railway Bridges: Railroad structures shall be designed in accordance with the current Manual for Railway Engineering, AREA.

5702.3 Light Rail - Mass Transit: Light rail - Mass Transit systems are not covered by this Criteria.

5702.4 Inspection, Rating and Posting - Bridges: Maintenance inspections, structural evaluations and ratings shall be in accordance with the latest edition of:

A. **Manual for Maintenance Inspection of Bridges, AASHTO.**

B. **Recording and Coding Guide for the Structure Inventory and Appraisal of the Nation's Bridges, FHWA.**

C. **Bridge Inspector's Training Manual 70, FHWA.**

D. **Manual on Uniform Traffic Control Devices for Streets and Highways, FHWA.**

5702.5 Welding: Welding shall be done in accordance with the Structural Welding Code, ANSI/AWS D1.1, AWS.

SECTION 5703 GEOMETRICS

5703.1 Geometric Standards: The geometry of the structure shall conform to the current AASHTO recommendations, whenever reasonably permitted by site conditions. When practical considerations dictate a variance from these criteria, the highest standards allowed by the site shall be provided.

5703.2 Horizontal Clearances:

A. **Roadway Clearance:** Roadway clearance shall conform to minimum roadway widths for bridges as shown in the current edition of A Policy on Geometric Design of Highways and Streets, AASHTO.

B. **Railway Clearance:** Railway clearance shall conform to dimensions and diagrams as promulgated by the respective railway companies and appropriate state and federal agencies.

C. **Channel Clearance:** Consideration shall be given to potential for clogging in determining size of waterway opening and location of piers.

5703.3 Vertical Clearances:

A. **Roadway Clearance:** Minimum vertical clearance shall be 14'-0" unless otherwise required by local, state, or federal regulations for certain classes of highways. If possible sixteen (16) feet should be provided plus six (6) inches for future surfacing.

B. **Railway Clearance:** Railway clearance shall conform to dimensions and diagrams as promulgated by the respective railway companies and appropriate state and federal agencies.

C. **Channel Clearance:** Channel clearance shall provide a minimum of two feet freeboard above the calculated 100-year high water elevation.

5703.4 Other:

A. **Turning Radii:** Turning radii should conform to geometric design requirements of the roadway.

B. **Utility Accommodation:** Utility companies should be consulted to determine requirements for carrying utility lines across structures. Utility facilities shall not be installed to infringe upon structure clearances.

C. **Aesthetics:** Recognizing that bridges are relatively permanent, highly visible structures, aesthetic values should be considered including proportion, function, location, design details, and workmanship to provide a structure that is visually pleasing and in harmony with its surroundings.

SECTION 5704 BRIDGE SUPERSTRUCTURES

5704.1 Lane Widths: In general, bridge superstructures should be designed such that the clear distance between curbs will accommodate 12-foot lane widths plus three feet of additional width for each outside or median lane. Lesser lane widths may be used, however in no case should they be reduced below the recommended minimum, specified in the latest edition of A Policy on Geometric Design of Highways and Streets, AASHTO

5704.2 Railings: Railings shall be provided along the edges of bridge superstructures for protection of traffic and pedestrians. A pedestrian walkway may be separated from an adjacent roadway by a traffic railing or barrier with a pedestrian railing along the edge of the bridge superstructure. The height, design loading and other requirements for the railings and barriers shall be in accordance with AASHTO Standard Specifications for Highway Bridges.

5704.3 Traffic Barriers: The height, design loading and other requirements for traffic barriers and combination traffic barrier and pedestrian railings shall be in accordance with AASHTO Standard Specifications for Highway Bridges.

5704.4 Sidewalks:

A. **Width:** The width of sidewalks on bridge superstructures shall be 4-feet minimum with a desirable width of 5-feet.

B. **Design Loading:** The design live load for sidewalks and their supporting members shall be in accordance with AASHTO Standard Specifications for Highway Bridges.

5704.5 Bikeways:

A. **General:** Bikeways on bridges shall be bicycle lanes in which a portion of the roadway has been designated for preferential or exclusive use by bicycles. They shall be distinguished from the portion of the roadway for motor vehicular traffic by a paint stripe, curb or other similar device. The bicycle lane shall carry one-way traffic and shall be a minimum of 4.0-feet wide with a desirable width of 4.5-feet. The lane width shall be increased a minimum of 0.5 foot when it is separated from traffic by a raised curb, but an increase of 1.0-foot is desirable. The bicycle lane surface shall be of asphalt or concrete similar to the material used for the adjacent roadway or pedestrian walkway.

One-Way Bicycle Lanes on Bridges

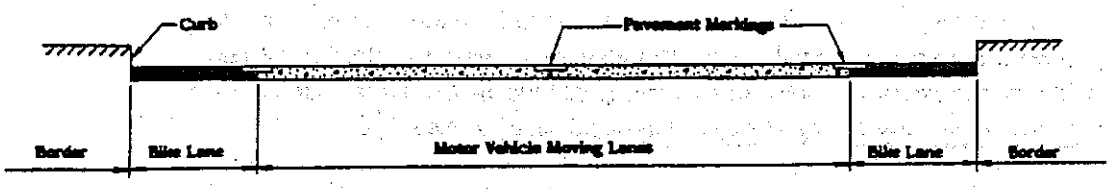

(a) Bicycle lane separated from Motor Vehicles by Pavement Markings.

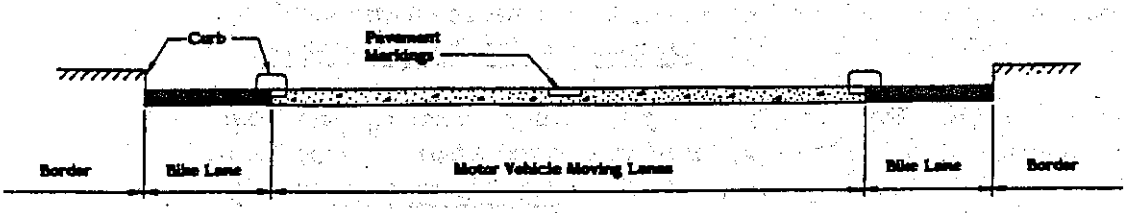

(b) Bicycle lane separated from Motor Vehicles by Curb.

5704.6 Bridge Decks:

A. General: Bridge decks should generally be constructed of reinforced concrete. The deck slabs shall be designed with adequate stiffness to limit deflections or deformations that may be detrimental to the structure at service load.

B. Materials and Components:

1. **Concrete:** Concrete for bridge decks shall be air entrained. Generally, a concrete mix providing an f_c' value of 4,000 psi should be used for design.

2. **Reinforcing Steel:** All reinforcing steel used in reinforced concrete bridge decks shall be deformed bars and shall comply with ASTM Designation A615, Grade-60 reinforcing steel. The reinforcing bars in the deck, sidewalks and barriers shall be epoxy coated.

A minimum clear distance of 1 inch measured from the bottom of the slab to the reinforcing steel shall be provided. A minimum clear distance of 2½-inches measured from the top of the slab or integral wearing surface shall be provided.

The clear distance between parallel bars shall not be less than 1½ times the nominal diameter of the bars, 1½ times the maximum size of coarse aggregate, nor 1½-inches.

3. **Wearing Surface:** A wearing surface shall be provided on bridge decks. A separate course, wet bonded to the structural concrete bridge deck, such as a high density concrete mix or trap rock aggregate mix is recommended. The thickness of the wearing course shall be 1½-inches minimum.

4. **Surface Finish:** Concrete bridge decks shall be finished with an appropriate mechanical, self propelled finishing machine after consolidation of the concrete.

5. **Surface Texture:** Before the concrete obtains initial set, the finished bridge deck shall be textured by means of transverse wire brooming.

6. **Deck Drainage:** Transverse drainage of the bridge deck shall be obtained by means of a suitable crown in the roadway. Longitudinal drainage shall be obtained by means of drain scuppers, floor drains, or an enclosed drainage system where desirable. Drainage shall be directed away from bearing and expansion devices.

7. **Approach Slabs:** Reinforced concrete approach slabs shall be provided for all structures in accordance with the lines, grades, and typical section that shall be included in the contract plans. The ends of the approach slabs adjacent to the structure shall be supported on a seat constructed with the abutment backwall. The minimum thickness of the approach slab shall be 12-inches. The approach slab may be constructed of the same class of concrete used in the bridge deck or in the approach pavement.

8. **Expansion Joints:** Bridge superstructures shall be designed to accommodate thermal expansion and contraction movements.

Watertight expansion devices shall be used at all joint locations except for integral end bents. The requirements for the expansion devices shall be in accordance with the governing agency policy or specifications.

9. **Bearing Devices:** Bearing devices shall be provided to transmit loads to the substructure elements and accommodate thermal movement and/or rotation. The requirements for the bearing devices shall be in accordance with the governing agency policy or specifications.

C. **Stay-In-Place Steel Deck Forms:** Permanent steel forms for cast-in-place concrete decks may be used in lieu of removable forms for decks supported on steel beams or girders. The stay-in-place forms may be used between exterior girders. Conventional forming methods shall be used for the cast-in-place concrete deck overhang of the exterior girders.

If permanent steel deck forms are used, shop drawings of the forms and their installation shall be prepared by the Contractor and submitted to the Engineer for approval prior to use of the forms. Complete typical details, showing minimum acceptable clear distances to form faces and any alterations to the deck slab design with the use of permanent steel deck forms, shall be shown on the shop drawings.

Permanent steel deck forms, support closure elements and accessories shall be fabricated from steel conforming to ASTM Specification A446 (Grades A through F) having a coating class of G165 in accordance with ASTM Specification A525. All other form components and accessories shall be galvanized in accordance with ASTM Specification A123.

D. **Precast Prestressed Concrete Deck Panels:** Permanent precast, prestressed concrete panels may be used in lieu of removable forms for decks supported on steel beams or girders and on prestressed concrete beams. If used, the deck panels shall be designed to act compositely with the cast-in-place portion of the structural concrete slab. The panels may be used between exterior girders. Conventional forming methods shall be used for the cast-in-place concrete deck overhang of the exterior girders.

Design, construction and installation of the panels shall be in accordance with the governing agency policy and specifications. Particular attention shall be given to provide positive support for the panels, using grout or cast-in-place deck concrete.

5704.7 Structural Systems:

A. Selection of the superstructure type shall be based on the most suitable and economical system for the particular project and conditions at the site. Preparation of a preliminary design and cost estimate for each type being considered is the preferred process for forming the basis of the final selection.

B. **Steel Rolled Beams:**

1. **Span Lengths:** Generally, steel rolled beams may be used for span lengths up to 90-feet. Economy will generally be realized if shear connectors are used on the top flange to provide composite action with the concrete deck slab.

2. **Materials:** Structural steel conforming to ASTM A36 or ASTM A572 shall be painted. Structural steel conforming to ASTM A588 may be unpainted. Welded stud shear connectors shall conform to the requirements of ASTM A108.

3. **Specifications:** Allowable stress levels shall be in accordance with AASHTO Standard Specifications for Highway Bridges. Welding shall be in accordance with AWS Specifications as modified by AASHTO Standard Specifications for Highway Bridges.

4. **Connections:** All connections and splices shall be designed in accordance with appropriate governing specifications and the details shall be shown on the contract plans. Field connections shall be made with ASTM A325 High Strength Bolts. All welded connections shall be designed in accordance with AWS and AASHTO Standard Specifications for Highway Bridges.

5. **Shop Drawings:** Prior to fabrication, the Contractor shall provide to the Engineer for review, complete shop drawings for all members and connections to assure conformance with the intent of the plans and specifications.

C. **Welded Steel Girders:**

1. **Span Lengths:** Generally, welded steel girders are economical for span

lengths in excess of 90-feet. However, under certain conditions such as curved and skewed alignments, and variable depth structures, they may be economical for lesser ranges of span length. Economy will generally be realized in multiple girder layouts if shear connectors are used on the top flange to provide composite action with the concrete deck slab.

2. **Floor Systems:** Generally, multiple steel girders with a cast-in-place concrete deck should be used for superstructure span lengths up to approximately 125 feet. For longer spans, a structural floor system comprised of fewer girders with transverse floor beams and stringers should be considered.

3. **Materials:** Structural steel conforming to ASTM A36 or ASTM A572 shall be painted. Structural steel conforming to ASTM A588 may be unpainted. Welded stud shear connectors shall conform to the requirements of ASTM A108.

4. **Specifications:** Allowable stress levels shall be in accordance with AASHTO Standard Specifications for Highway Bridges. Welding shall be in accordance with AWS Specifications as modified by AASHTO Standard Specifications for Highway Bridges.

5. **Connections:** All connections and splices shall be designed in accordance with appropriate governing specifications and the details shall be shown on the contract plans. Field connections should generally be made with ASTM A325 High Strength Bolts. All welded connections shall be designed in accordance with AWS and AASHTO Standard Specifications for Highway Bridges.

6. **Shop Drawings:** Prior to fabrication, the Contractor provide to the Engineer for review, complete shop drawings for all members and connections to assure conformance with the intent of the plans and specifications.

D. **Prestressed Concrete Beams:**

1. **General:** Various standard beam sections have been developed by the State Highway Commission or Department of Transportation. The common types are the various sizes of I-beams and the Double Stem Tee Beam. Span lengths up to approximately 50-feet may be attained with the Double Stem Tee Beam. Span lengths up to approximately 110-feet may

be attained with the I-Beams. Economy will be realized if a means of shear transfer is provided between the top flange of the I-Beam and the concrete cast-in-place deck to attain composite action.

2. **Specifications:** Allowable stress levels and design criteria shall be in accordance with AASHTO Standard Specifications for Highway Bridges and the policies of the governing local and state jurisdiction.

3. **Concrete:** The Contractor shall be responsible for the design of the concrete mix in prestressed concrete beams including the proportions of water, cement and aggregates and the ratio of fine to coarse aggregate. The minimum twenty-eight (28) day compressive strength of the concrete shall be 5,000 psi. The Contractor's proposed design mix shall be submitted for approval prior to casting any of the prestressed concrete beams. The use of calcium chloride is specifically prohibited.

4. **Steel Materials:** Steel material used in the fabrication of the beams shall conform to the following requirements:

Item	Specification
Prestressing Strands	*ASTM A416, Grade 270
Reinforcing Steel	ASTM A615, Grade 60
Welded Wire Fabric	ASTM A185
Structural Steel	ASTM A36

*Low Relaxation Strands preferred.

5. **Surface Finish:** Surface finish for prestressed concrete members shall begin immediately following removal of the forms. fins and irregular projections shall be removed. Form tie cavities, holes, honeycomb spots, and other defects, shall be thoroughly cleaned, saturated with water, and carefully pointed with mortar matching the color of the member. Repaired surfaces shall be satisfactorily cured.

6. **Connections:** All connections and splices shall be designed in accordance with appropriate governing specifications and the details shall be shown on the contract plans.

7. **Shop Drawings:** Shop drawings showing in detail the type, size, number of units, location of tendons, method and sequence of releasing the strands, anchorage details, and details of proposed lifting loops and lifting procedure shall be submitted to the Engineer for review and

approval. The shop drawings shall also tabulate critical design stresses and parameters including initial tension and total prestress load. No beams shall be cast until the shop drawings have been approved by the Engineer.

E. Reinforced Concrete Superstructures: Cast-in-place reinforced concrete superstructures may be suitable and economical for some applications, particularly for short span and special structure types. Allowable stress levels, material types and design criteria shall be in accordance with AASHTO Standard Specifications for Highway Bridges and the policies of the governing agency.

F. Timber Superstructures: Timber superstructures may be suitable and economical for some applications, particularly for temporary and special structure types. Allowable stress levels, material and design criteria shall be in accordance with AASHTO Standard Specifications for Highway Bridges and the policies of the governing agency. Additional references include the A.R.E.A. Manual of Recommended Practice and the National Design Specifications for Wood Construction.

SECTION 5705 BRIDGE SUBSTRUCTURES

5705.1 Type: The type and configuration of substructure elements shall be selected to meet project and site requirements. Foundation, aesthetic, economic and maintenance considerations shall be evaluated in the design process.

5705.2 Location: Substructure units shall be located to provide clearances as noted in Section 5703 and optimum sight distances allowed by site conditions. Where practical, they shall be situated to avoid conflict with utilities. When practical considerations allow, substructure elements at stream crossings shall be located beyond the low water channel.

5705.3 Foundation Requirements: A subsurface investigation shall be made to determine foundation requirements and available foundation options. The foundation type selected shall reflect economic considerations, ease of construction, disruption to adjacent properties and minimization of damage to adjacent facilities.

A. Spread Footings: The bearing capacity of the foundation soil may be

estimated using accepted theories. Such theories are based on the measurement of soil parameters such as cohesion and angle of friction or on the results of field tests such as the standard penetration test or the shear vane test.

The bearing capacity may also be determined by load tests in excavated foundation pits. Load tests have a limited depth influence and may not disclose long-term consolidation. For this reason load tests shall not be used without drilling or probing to determine the soil profile below the foundation.

Where testing is not carried out, the bearing capacity and angle of friction of broad basic groups of materials given in Tables A and B may be used. These values are taken from AASHTO Standard Specifications for Highway Bridges. These values should be used conservatively; for example, in determining lateral pressures, the minimum angle of friction shall be taken.

TABLE A - BEARING CAPACITY

Material	Safe Bearing Capacity Tons per Square Foot	
	Minimum	Maximum
Alluvial Soils	1/2	1
Clays	1	4
Sand, confined	1	4
Gravel	2	4
Cemented sand and gravel	5	10
Rock	5	-

TABLE B - ANGLE OF FRICTION

Material	Angle	Material	Angle
Earth, Loam	30° to 45°	Gravel	30° to 40°
Dry Sand	25° to 35°	Cinders	25° to 40°
Moist Sand	30° to 45°	Coke	30° to 45°
Wet Sand	15° to 30°	Coal	25° to 35°
Compact Earth	35° to 40°		

B. Pile Foundations: Piling should be considered when footings cannot economically be founded on rock or other solid foundation material.

Piles may be used as a protection against scour at locations where soil conditions would normally permit the use of spread footings.

Bearing values and other requirements shall be in accordance with AASHTO Standard Specifications for Highway Bridges for the particular type of pile used.

5705.4 Frost Depth: The frost depth to be used for foundation design shall be four feet. Practical site considerations will be used to determine the minimum cover, if any, over the footings.

5705.5 Scour: Substructure elements shall be designed to minimize detrimental effects of scour in stream beds. Piers and abutments subjected to scour shall be provided with some form of protection specifically designed to withstand the maximum scour anticipated.

5705.6 Collision Protection: Substructure elements with the potential for collision damage shall be provided with separate positive crash protection or be designed to resist the forces induced by a collision. Armoring shall be considered for areas subjected to impact.

5705.7 Berms at Abutments: A berm shall be provided in embankment end slopes at non-integral abutments. The berm shall be at least three feet wide and provide one foot minimum clearance to the superstructure.

5705.8 Slope Protection at Abutments: Embankments shall be provided with slope protection at abutments. The protection shall extend at least one foot beyond the limits of the superstructure and shall be designed so that storm drainage on the protected area does not run across the sides to unprotected areas.

5705.9 Maximum End Slope: The maximum embankment end slope at abutments shall be determined by the stability of the embankment material. This slope should generally not be steeper than 2:1.

5705.10 Abutment Wingwalls: The length and position of abutment wingwalls shall be designed to accommodate site conditions and earthwork

slopes so that soil and other materials do not extend onto abutment bearing seats.

5705.11 Superstructure Storm Drainage: Provisions shall be made to insure that storm drainage from the superstructure and its approaches does not cause erosion of the embankments at abutments.

5705.12 Abutment Backfill: Backfill material behind abutments shall be compacted select material. A positive drainage system (weepholes, transverse drains) shall be provided to relieve hydrostatic pressures.

5705.13 Fixity: The structural analysis of substructure elements shall reflect a condition of fixity at footings and joints which is consistent with the actual embedment of piling, reinforcement details and connection to the superstructure.

5705.14 Substructure Concrete: Concrete for substructure units extending above the ground line shall be air entrained. Concrete for footings below the ground line need not be air entrained. In general, a concrete mix with an f_c' value of 4000 psi should be used for design purposes.

5705.15 Reinforcing Steel: Grade-60 reinforcing steel shall be used for substructures.

5705.16 Structural Steel: ASTM A36 steel shall be used for structural steel bents and piles. Exposed steel members shall be painted. Field connections, except pile splices, shall be bolted.

SECTION 5706 LOADINGS

5706.1 General: Structures shall be designed to carry the following loads and forces:

Dead load.
Live load.
Impact or dynamic effect of the live load.
Wind loads.

Other possible loads and forces for consideration are:

Longitudinal forces, centrifugal force, thermal forces, earth pressure,

buoyancy, shrinkage stresses, rib shortening, erection stresses, ice and stream current pressure, and earthquake loads.

The influence of future adjacent development upon the loads to the structure shall be considered in the design whenever such loads can be reasonably anticipated.

5706.2 Dead Load: The dead load shall consist of the weight of the entire structure, including the roadway, sidewalks, car tracks, pipes, conduits, cables, and other public utility services.

5706.3 Future Dead Load:

A. **Roadway Bridges:** A minimum allowance of twenty-five pounds per square foot shall be provided for a future wearing surface.

B. **Railway Bridges:** An allowance of thirty pounds per square foot shall be provided for track raising on ballasted deck structures.

5706.4 Live Load: The live load shall be the weight of the applied moving vehicles and pedestrians.

A. **Roadway Bridges and Miscellaneous Structures:** Structures subjected to vehicular loadings shall be designed for the HS20-44 loading as a minimum load condition. A more severe loading condition shall be used when warranted by specific conditions. Consideration shall be given to additional loads resulting from the presence of sidewalks on the structure.

B. **Railroad Structures:** Structures subjected to railway loadings shall be designed for the Cooper E-80 loading unless otherwise specified by the railroad company.

5706.5 Impact: Impact allowance or increment shall be expressed as a fraction of the live load stress and shall be determined and applied according to the current governing specifications as listed in Section 5702.

5706.6 Wind Loads: Wind loads shall be determined and applied according to the current governing specifications as listed in Section 5702.

5706.7 Longitudinal Forces: The applicable longitudinal forces shall be

determined and applied according to the current governing specifications as listed in Section 5702, except the determination of the longitudinal braking force shall be modified as follows:

Provision shall be made for the effect of braking (or acceleration) in all lanes that may be expected to carry traffic traveling in the same direction during the life of the bridge. The specified reduction in load intensity for multiple-loaded lanes may be applied.

The longitudinal load due to braking in one lane shall be equal to 80% of the load of the design truck. The coincident longitudinal load in each other traffic lane shall be 5% of the lane load, including concentrated load for moment. The longitudinal force shall be applied 6-feet above the roadway surface.

5706.8 Seismic Loads: Structures shall be designed for Zone 2 seismic loadings. The current governing specifications, as listed in Section 5702, shall be used to determine the magnitude and application of the seismic load.

5706.9 Other Forces: The following forces when they exist shall be determined and applied according to the current governing specifications as listed in Section 5702:

A. Thermal Forces
B. Earth Pressure
C. Buoyancy
D. Shrinkage Stresses
E. Rib Shortening
F. Ice and Current Pressure
G. Erection Stresses
H. Uplift

5706.10 Sidewalk, Curb and Railing Loading: Sidewalk, curb and railing loadings where applicable shall be determined and applied according to the current governing specifications as listed in Section 5702.

5706.11 Unusual Vehicle Loads: The term "Unusual Vehicle Loads" describes various types of transportation vehicles that can be placed on bridge structures other than the standard design truck outlined in AASHTO.

Bridge structure live loads resulting from "Unusual Vehicle Loads" encompass the following modes of transportation: (1) railroads; (2) aircraft; (3) mining and "off-road" vehicles; (4) light rail transit; (5) other transit systems; (6) military; and (7) construction.

The live loads associated with this category of loads, except railroads, are not specifically covered by this specification. The determination and application of these loads shall be the responsibility of the Engineer.

SECTION 5707 ROADWAY DRAINAGE

5707.1 General: Drainage of stormwater at bridge locations shall be designed in a manner consistent with the criteria used for design of the adjacent street storm drainage system. Reference is made to Section 5600 of the Standard Specifications and Design Criteria, APWA, K.C. Metro Chapter.

5707.2 Design Considerations for Deck Drainage: Provisions shall be made to drain the deck surface of bridges by means of scuppers, longitudinal drains, or other suitable means. The design storm shall be the storm suitable for design of the adjacent roadway storm sewer system. Roadway grade shall be designed to provide positive longitudinal drainage.

5707.3 Discharge: Discharge points shall be selected to minimize erosion, hazard to traffic beneath the bridge, or damage to the bridge structure. Where possible, runoff shall be conveyed in pipes to the roadway storm sewer system. Refer to Section 5705, Bridge Substructures, on prevention of damage to embankments, and abutment protection.

SECTION 5708 FLOODWAY HYDRAULICS - URBAN AREAS

5708.1 General: Design of bridge waterway openings shall conform to all special requirements imposed by Federal, State and local agencies. Often, conditions exist where more than one method of analysis will be required to provide the information and data needed for review and approval by the various agenices. Design shall consider present and potential land use upstream and downstream. Data gathered, prior to design, shall include available historic information concerning flood flows, Flood Plain Information reports, Flood Insurance Study reports and studies or plans for any possible flood improvement projects in or near the proposed site.

5708.2 Flood Design Frequency: In general, all bridge openings should be designed to pass the 100-year flood. Lesser magnitude of floods may be considered under certain circumstances such as:

Flow over the roadway.
Land use.
Relief structures.
Severe restrictions upsteam or downstream that are not likely to be removed during life of the proposed structure.

5708.3 Backwater Control: Increase in backwater elevation caused by the proposed structure shall be limited to 1.0-foot above existing backwater elevation unless restricted by other considerations. Lesser increases in backwater may be required due to land use, defined floodways under the National Flood Insurance Program, or undesirable velocities through the proposed opening. Consideration shall be given to downstream structures and land use when a substantial increase in flood carrying capacity is contemplated for a given site.

Backwater analyses shall be performed using current state of the art methods such as the Department of the Army Corps of Engineers, HEC-2 program; Federal Highway Administration Hydraulic Design Series No. 1, Hydraulics of Bridge Waterways method; or other methods that are approved by reviewing agencies.

5708.4 Erosion Protection: Existing conditions at the proposed bridge site shall be reviewed for erosion and scour problems. In-depth scour studies may be warranted at certain sites. The bridge opening and substructure shall be protected against damage from scour.

Channel velocities for existing and proposed conditions shall be determined. Adverse changes in velocities through the site may warrant bank and embankment protection. Front slopes of bridge abutments or end bents that intersect or nearly intersect the channel bank or channel bottom shall be protected up to the design high water elevation. Roadway embankment protection, paralel to the roadway shuld extend to the end of the wingwalls.

The roadway embankment shall be protected against erosion at locations where high velocities or turbulence may occur such as side ditches, bridges with severe skew, channel meander, relief structures, and overflow sections where the roadway is frequently overtopped. See Section 5605.2.C for design velocity with respect to conditions of channel lining material.

Removal of natural channel and bank protection shall be avoided if possible.

If the design solution includes a roadway overflow section that is frequently overtopped, road closure gates, warning devices and lighting shall be provided to protect the public.

SECTION 5709 EVALUATION OF EXISTING STRUCTURES

5709.1 Scope: This section governs the procedures and policies for determining the physical condition and maintenance needs of existing structures according to the current governing specifications as listed in Section 5702.4 except as modified herein.

5709. 2 Posting:

A. Weight Limit: The safe load for posting shall be calculated as greater than 55% but less than 75% of the yield strength of the bridge member controlling the rating. The rating should be calculated as the lesser of the values of either the Standard H-truck or the 352 semi-trailer configuration unless otherwise specified by the City Engineer.

B. Closure Limit: No bridge shall be posted for a weight of less than three (3) tons. A bridge shall be closed if not capable of carrying three (3) tons.

C. Exceptions:

1. **Speed Limit:** A reduced speed limit may be used to allow bridges to carry heavier loads by decreasing impact or by avoiding high speed collisions on structures with limited roadway clearance. The speed limits established should be limited only to vehicles which are affected by the need to reduce impact.

2. **Special Load Permit:** A special permit should be required by the local governing agency for all vehicles with a gross weight in excess of the posted load limit. Such weights should not exceed the Operating Rating for the structure.

5709.3 Sufficiency Rating for Metro Area: A Sufficiency Rating for each structure shall be determined using the formula described in Appendix A, Recording and Coding Guide for the Structure Inventory and Appraisal of the Nation's Bridges. The percentage number obtained by the use of this formula can be used as a guideline for the decision to replace or repair a structure.

Recommended guidelines are as follows:

Sufficiency Rating <50	Replace
Sufficiency Rating ≥ 50 but ≤ 80	Repair or Rehabilitaiton
Sufficiency Rating >80	Annual Maintenance

SECTION 5710 MISCELLANEOUS STRUCTURES

5710.1 Scope: This section governs the design of miscellaneous structures which includes retaining walls, areaways, reinforced concrete box culverts, curb inlets, field basins and junction boxes.

5710.2 Retaining Walls:

A. **General:** Retaining walls shall be designed to withstand earth pressure, including any live load surcharge where appropriate, and the weight of the wall.

Stone masonry and plain concrete walls shall be gravity type. Reinforced concrete walls may be a cantilever, counterforted, buttressed, or cellular type.

B. **Loads:**

1. **Earth Loads:** Structures which retain fills shall be proportioned to withstand pressure as determined by Rankine's formula. No structure shall be designed for less than an equivalent fluid weight of 30-pounds per cubic foot. A vertical earth load of 120-pounds per cubic foot shall

be used in the absence of soil tests. Consideration shall be given to increased pressure due to sloping fill behind the wall.

2. **Vehicular Surcharge Loads:** Vehicular surcharge loads shall be considered when applied within a horizontal distance from the top of the wall equal to or less than one-half its height. This surcharge pressure added with the live load surcharge pressure shall be equal to or greater than the pressure generated by 2-feet of earth for streets or 10-feet of earth for railroads.

   When loads are applied at a horizontal distance in excess of one-half of the wall height, the application of surcharge pressures shall be at the discretion of the Engineer.

   Pressures shall be modified as required when the surcharge load is above the top of the wall.

3. **Concentrated or Partial Loads:** Concentrated or partial loads which are located within a distance less than the full height of the wall shall be converted to equivalent soil height loads and appropriate horizontal pressures shall be calculated and applied in addition to the normal earth load pressures.

C. **Design Considerations:**

1. **Sliding and Overturning Factor of Safety:** The desired safety factor for both sliding and overturning is 2.0 and the minimum safety factor for both is 1.5.

2. **Coefficient of Friction:** In the absence of soil tests, a friction coefficient of 0.40 may be used in coarse granular soil.

3. **Force of Friction:** The total frictional force on the base of a footing is $F = fN$ where f is the friction coefficient and N is the normal force of the footing against the soil.

4. **Force of Cohesion:** When the foundation rests on clay, the cohesion should be used to determine the force resisting sliding. This cohesion

force may be calculated using one-half of the unconfined compressive strength of the soil as the unit cohesion.

5. **Stability:** When resistance to sliding cannot be adequately provided by friction resistance of the footing, a soil shear key, piling or other positive restraint shall be considered. When pile footings are used, the outer row should be battered to resist horizontal forces.

D. **Joints:** Contraction joints shall be provided at intervals not exceeding 32-feet and expansion joints at intervals not exceeding 96-feet for gravity or reinforced concrete walls.

E. **Drainage and Backfill:** All retaining walls shall be designed to withstand earth pressure. Walls are generally not designed to resist water pressure in addition to the earth pressure. To relieve the hydostatic pressure, drains commonly consisting of pipes known as weepholes with a diameter of 2 to 4-inches shall extend through the stem of the wall. Weepholes shall be protected against clogging by pockets of wrapped gravel in the backfill. These drains shall be spaced at suitable intervals, not to exceed 12-feet both vertically and horizontally. In counterfort walls, there shall be at least one drain in each pocket between adjacent counterforts.

Granular materials such as clean sands and gravels shall be used for backfill adjacent to the wall.

5710.3 Curb Inlets, Field Basins and Junction Boxes:

A. **General:** Curb inlets, field basins, and junction boxes shall be designed to withstand earth pressure, including any live load surcharge and vehicular wheel loads where appropriate.

B. **Loads:**

1. **Earth Loads:** The structure shall be proportioned to withstand pressure as determined by Rankine's formula and no structure shall be designed for less than an equivalent fluid pressure of 30-pounds per cubic foot.

2. **Live Load Surcharge:** A surcharge pressure of not less than 2-feet of earth shall be added to the normal earth pressure to compensate for vehicular traffic effects.

3. **Vehicular Wheel Loads:** All structures which are subjected to vehicular traffic shall be designed to carry a 16,000-pound wheel load distributed according to AASHTO guidelines.

C. **Design:** Standard curb inlets, field basins or junction boxes which have been adopted by local authorities may be used in lieu of special designs required by this specification.

5710.4 Areaways:

A. **General:** Areaways shall be designed to withstand all imposed loads.

B. **Loads:**

1. **Dead Loads:** When calculating dead loads, the recommended unit weights for soil and pavement are 120-pounds per cubic foot and 150-pounds per cubic foot respectively.

   The structure shall be designed to withstand pressure as determined by Rankine's formula in addition to any hydrostatic pressure. No structure shall be designed for less than an equivalent fluid pressure of 40-pounds per cubic foot.

2. **Vehicular Wheel Loads:** The top slab of an areaway which is subjected to vehicular traffic and which has less than 2-feet of cover shall be designed for a 16,000-pound wheel load distributed according to the governing specifications as listed in Section 5702.

   When the depth of fill is 2-feet or more, the design analysis shall include a concentrated 16,000-pound wheel load uniformly distributed over a square with sides equal to 1-3/4 times the depth of fill.

   When pressure distribution areas from several concentrations overlap, the total load shall be uniformly distributed over the area defined by the outside limits of the individual areas, however the total width of distribution shall not exceed the total width of the supporting slab. For

single spans, the effect of live load may be neglected when the depth of fill is more than 8 feet and when the depth of fill exceeds the span length. For multiple spans the effect of live load may also be neglected when the depth of fill exceeds the distance between end support faces.

A minimum lateral surcharge pressure equal to 2-feet of additional earth shall be used to compensate for vehicular live loads.

3. **Sidewalk Loads:** All sidewalk areaway structures which are not subjected to vehicular traffic shall be designed for a combined dead load, soil pressure and uniform live load of 250-pounds per square foot with a concentrated live load of 2,000-pounds. The concentrated load shall be applied according to paragraph (2) of this subsection.

5710.5 Reinforced Concrete Box Culverts

A. Reinforced Concrete Box (Cast-in-Place):

1. **Materials:**

   a. **Concrete:** The minimum 28- day compressive strength (f_c') shall be greater than 3,000-pounds per square inch.

   b. **Reinforcement:** Reinforcing steel bars shall be deformed new billet steel conforming to ASTM A-615-Grade-60. Welded-wire fabric shall conform to ASTM A-185 Grade-65.

2. **Design:**

   a. **General:** All structures shall be designed in accordance with the governing specifications as listed in Section 5702.

   b. **Loading:** The appropriate HS20 live load or Cooper E-80 live load along with all applicable dead loads and soil loads shall be applied as required. Special care shall be taken to insure the proper determination of the concentrated live load distribution through any fill material over the box.

c. **Earth pressures:** Vertical and horizontal earth pressures shall be computed by recognized or appropriately documented analytical techniques based on the principles of soil mechanics and soil structure interaction. Minimum design pressures shall be calculated based upon the following equivalent fluid weight for boxes supported on yielding foundations:

For vertical earth pressure - 120 pounds per cubic foot

For lateral earth pressure - 30 pounds per cubic foot
(granular, drained backfill)

For boxes on unyielding foundations,
a special analysis shall be made.

If actual design conditions would produce larger than minimum design pressures the larger pressures shall be used.

d. **Reinforcement Cover Requirements:** The following minimum concrete cover shall be provided for reinforcement, except that appropriate typical state highway or approved local standard reinforced concrete box designs may be used in lieu of this specification.

Casting Type	Minimum Cover Inches
Concrete cast against & permanently exposed to earth	3
Concrete exposed to earth or weather	
Primary reinforcement	2
Stirrups, ties, and spirals	1-1/2
Top slab	
Top reinforcement	
Slab with 2-feet or less cover	3
Slab with more than 2-feet cover	2
Bottom reinforcement	1

Casting Type	Minimum Cover Inches
Concrete not exposed to weather or in contact with ground	
Primary reinforcement	1-1/2
Stirrups, ties, and spirals	1

B. Reinforced Concrete Box (Precast):

1. **General:** Boxes may be manufactured using conventional structural concrete and forms (formed) or with dry concrete and vibrating form pipe making methods (machine-made). Standard dimensions shall meet appropriate current governing specifications as listed in Section 5702.

2. **Design, Materials, and Loading Requirements:** Manufacture and design shall be in accordance with ASTM C789, "Precast Reinforced Concrete Box Sections for Culverts, Storm Drains and Sewers" or ASTM C850, "Prestressed Reinforced Concrete Box Structures for Culverts, Storm Drains and Sewers with Less Than Two Feet of Cover Subject to Highway Loadings." Clearances to reinforcement as specified by ASTM shall be approved by the City Engineer.

SECTION 5711 PLAN REQUIREMENTS

5711.1 Scope: This section governs the preparation of construction plans for bridges, culverts, retaining walls and other miscellaneous structures.

5711.2 General: The plans shall include all information necessary to build the structure in accordance with the design and specifications. The plans shall be arranged as required by the City Engineer. Standard Plans of the City may be included by reference to Standard Plan Number and Title. The Cover Sheet or Title Sheet of the plan set shall bear the seal of a Professional Engineer registered in the State of the City or governing agency. The plans shall be submitted to the City Engineer for review and approval.

5711.3 Scales: Plans shall be drawn at the following minimum scales. Larger scales may be needed and shall be used where necessary to clearly present the design. Bar scales shall be shown on each sheet for each scale used.

Plan:	1-inch = 50-feet
Profile:	
Vertical:	1-inch = 10-feet
Horizontal:	1-inch = 50-feet
Structural Plans:	1/4-inch = 1-foot
Graphic Drawings:	Varies

5711.4 Required Information:

A. **Cover or Title Sheet:** A Cover or Title Sheet shall be included and shall contain the following minimum information:

1. City, County, and State of agency responsible for the project.
2. Project name, identification and project number.
3. List of drawings in the plan set.
4. Location Map showing the general area and directional orientation of the project.
5. List of Utility Companies with facilities in the project site.
6. Approval block for signature by City Engineer, Director of Public Works or other Officials.

B. **General Plan and Elevation Drawing:** The General Plan and Elevation drawing shall show to scale the alignment, grade, span layout, roadway and sidewalk widths, general construction type and other principal features of the structure. The drawing shall contain the following additional minimum information:

1. General notes indicating the governing design loadings, design specifications, construction specifications, material requirements, and allowable stress levels for the principal materials of construction. Other notes shall include the following:

   a. Hydraulic data that is the basis for design of the structure.
   b. Traffic data and design speed.
   c. Datum used for the structure and/or project.
   d. Other miscellaneous notes pertaining to principal features of the structure such as concrete compressive strength (f'_c) and yield strengths or grades of reinforcement.

2. North arrow and bar scale.
3. Ties to permanent reference points for the structure.
4. Right-of-way, property, and easement lines.
5. Existing, man-made, and natural topographic features, such as streets, buildings, fences, trees, channels, ponds, streams, etc., and all existing and proposed utilities.
6. Location of test borings.
7. Existing and finish grade contours at intervals of 2.0 -feet or less in elevation; or equivalent detail indicating existing and finish grades and slopes.
8. A uniform set of symbols subject to approval by the City Engineer.
9. The centerline of any open channels including the direction of flow.
10. A cross section view of the structure showing roadway configuration and dimensions if requested by the City Engineer.
11. A tabulation of material quantities and bid items, if not included in the project specifications, and if requested by the City Engineer.

C. **Design Information For Each Element of the Structure:** The plans shall present design and detail information as necessary to construct each abutment, pier, and superstructure system included in the completed structure. The drawings shall include the following minimum information:

1. **Reinforced Concrete Members:**

   a. Overall dimensions of the concrete element or member to an accuracy of 1/8-inch.
   b. Reinforcing bar size location and spacing.
   c. Reinforcing bar splice locations and lap dimensions.
   d. Clear distance to outside faces of member or minimum concrete cover requirements for reinforcing bars.
   e. Full details of all connections and joint requirements.
   f. A station and alignment reference, including north arrow for each abutment or pier.
   g. A detailed list of reinforcing bars, weights and bending diagrams if requested by the City Engineer.
   h. Chamfer and fillet dimensions.
   i. All other details and requirements for construction of the member in accordance with the design.

2. **Structural Steel Members:**

   a. Overall dimensions of the structural steel elements or members to

an accuracy of 1/16-inch.

b. Framing plan for main members and cross bracing.
c. Girder elevation details showing material widths and thickness for flanges and webs.
d. Diagrams for required camber in members and tables or diagrams showing dead load deflections in members.
e. Generally, dead load deflections shall be shown at 1/4-points for rolled beam spans and 1/10-points for welded girder spans. Deflections shall be shown for the weight of the structural steel only and also for the total dead load of the completed superstructure.
f. Complete details for all connections, and weld sizes and requirements.
g. Complete details for all splices including splice material dimensions, and bolt size and spacing.
h. All other details and requirements for fabrication of the member in accordance with the design.

3. **Prestressed Concrete Members:**

a. Overall dimensions of the members to an accuracy of 1/8-inch. The maximum use shall be made of State Standard Sections, Standard Drawings, and fabrication procedures.
b. Size, material grade, spacing and layout of all prestress tendons.
c. Section views showing the location of all tendons between harp points and at the ends of the member.
d. Size, spacing, location and bending diagrams for all mild steel reinforcement in the member.
e. Table showing the theoretical camber for each girder and the concrete slab haunch dimensions at 1/4-points of the spans. Values shall be shown for the theoretical camber of the girder after erection and after the deck has been placed.
f. Other information as required for fabrication of the members in accordance with the design.

4. **Other Drawings:** Other drawings shall be included in the plans to present requirements for the structure. These drawings may include the following:

a. Pile size, spacing and other foundation requirements, including subsurface boring logs.
b. Expansion Joints.
c. Bridge railing and guardrail.
d. Traffic maintenance and detour requirements.
e. Lighting and signing plans.

DIVISION V
DESIGN CRITERIA

SECTION 5700 STRUCTURES

Approved and Adopted this 17th day of December, 1986

Kansas City Metropolitan Chapter
of the American Public Works Association

Section	Title	Page No.
5701	**GENERAL**	57-1
5701.1	Purpose	57-1
5701.2	Scope	57-1
5701.3	Definitions	57-1
5701.4	Abbreviations	57-2
5702	**GOVERNING SPECIFICATIONS**	57-3
5702.1	Roadway Bridges and Miscellaneous Structures	57-3
5702.2	Railway Bridges	57-3
5702.3	Light Rail - Mass Transit	57-3
5702.4	Inspection, Rating and Posting - Bridges	57-3
5702.5	Welding	57-3
5703	**GEOMETRICS**	57-3
5703.1	Geometric Standards	57-3

5703.2 Horizontal Clearances 57-4
5703.3 Vertical Clearances 57-4
5703.4 Other 57-4

5704 **BRIDGE SUPERSTRUCTURES** 57-5
5704.1 Lane Widths 57-5
5704.2 Railings 57-5
5704.3 Traffic Barriers 57-5
5704.4 Sidewalks 57-5
5704.5 Bikeways 57-5
5704.6 Bridge Decks 57-6
5704.7 Structural Systems 57-9

5705 **BRIDGE SUBSTRUCTURES** 57-12
5705.1 Type 57-12
5705.2 Location 57-12
5705.3 Foundation Requirements 57-12
5705.4 Frost Depth 57-14
5705.5 Scour 57-14
5705.6 Collision Protection 57-14
5705.7 Berms at Abutments 57-14
5705.8 Slope Protection at Abutments 57-14
5705.9 Maximum End Slope 57-14
5705.10 Abutment Wingwalls 57-14
5705.11 Superstructure Storm Drainage 57-15
5705.12 Abutment Backfill 57-15
5705.13 Fixity 57-15
5705.14 Substructure Concrete 57-15
5705.15 Reinforcing Steel 57-15
5705.16 Structural Steel 57-15

5706 **LOADINGS** 57-15
5706.1 General 57-15
5706.2 Dead Load 57-16
5706.3 Future Dead Load 57-16
5706.4 Live Load 57-16

5706.5 Impact 57-16
5706.6 Wind Loads 57-16
5706.7 Longitudinal Forces 57-16
5706.8 Seismic Loads 57-17
5706.9 Other Forces 57-17
5706.10 Sidewalk, Curb and Railing Loading 57-17
5706.11 Unusual Vehicle Loads 57-17

5707 ROADWAY DRAINAGE 57-18
5707.1 General 57-18
5707.2 Design Considerations, Deck Drainage 57-18
5707.3 Discharge 57-18

5708 FLOODWAY HYDRAULICS-URBAN AREAS 57-18
5708.1 General 57-18
5708.2 Flood Design Frequency 57-19
5708.3 Backwater Control 57-19
5708.4 Erosion Protection 57-19

5709 EVALUATION OF EXISTING STRUCTURES 57-20
5709.1 Scope 57-20
5709.2 Posting 57-20
5709.3 Sufficiency Rating for Metro Area 57-21

5710 MISCELLANEOUS STRUCTURES 57-21
5710.1 Scope 57-21
5710.2 Retaining Walls 57-21
5710.3 Curb Inlets, Field Basins and Junction Boxes 57-23
5710.4 Areaways 57-24
5710.5 Reinforced Concrete Box Culverts 57-25

5711 PLAN REQUIREMENTS 57-27
5711.1 Scope 57-27
5711.2 General 57-27
5711.3 Scales 57-27
5711.4 Required Information 57-28

DIVISION V
DESIGN Criteria

SECTION 5700 STRUCTURES

SECTION 5701 GENERAL

5701.1 Purpose: The purpose of this Criteria is to provide standardization in the Metropolitan Kansas City Area for the Public Works structures which are designed and constructed for the many separate municipal and county jurisdictions included therein.

5701.2 Scope: This Criteria is intended to cover the bridges, culverts, retaining walls and other miscellaneous structures routinely addressed within the various jurisdictions. Bridges included herein are limited to short and moderate span structures. This Criteria may be used for guidance in the design of long span structures, however, the designer shall be responsible for addressing the numerous items unique to the proper design of long span bridges. Patented and proprietary systems are not included in this Criteria but may be appropriate for site conditions. It is not the intent of this Criteria to exclude such systems from consideration or use.

5701.3 Definitions:

A. **City Engineer:** The term City Engineer, as used in this Criteria, shall represent the state, county, city or other governmental body's representative responsible for technical decisions concerning the project. Such person may be the Director of Public Works, City or County Engineer, Administrator or any other person empowered by the governing agency to make such decisions.

B. **Engineer:** The term Engineer, as used in this Criteria, shall represent the Engineer or Designer who performs the actual design work. Nothing in this Criteria is intended to alter or circumvent local, state, or federal laws or regulations regarding liability and/or responsibility for such designs.

C. **Bridge:** A structure, spanning 20-feet or greater between abutment faces, providing a means of transit for pedestrians and/or vehicles above the land and/or water surface of a valley, river, stream, lake, canal, above a road, highway, railway or other obstruction, whether natural or artificial.

In general, the essential parts of a bridge are: (1) the substructure consisting of its abutments and pier or piers supporting the superstructure, (2) the superstructure slab, girder, truss, arch or other span or spans supporting the roadway loads and transferring them to the substructure, and (3) the roadway and its incidental parts functioning to receive and transmit traffic loads.

D. **Culvert:** A small structure, spanning less than 20-feet between abutment faces, normally below the elevation of the roadway surface.

E. **Curb Inlet:** A cast-in-place or precast structure constructed adjacent to or integral with the curb section of a street or highway to provide means for rain or other water accumulated upon the roadway surface to drain through it onto an open space or drainage system below the structure.

F. **Areaway:** Special structurally enclosed area under a street or sidewalk designed to function as part of a building.

G. **Retaining Wall:** A structure designed to restrain and hold back a mass of earth or other fill material.

5701.4 Abbreviations:

AASHTO	**American Association of State Highway and Transportation Officials**
ACI	**American Concrete Institute**
AISC	**American Institute of Steel Construction**
ASTM	**American Society for Testing and Materials**
ANSI	**American National Standards Institute**
APWA	**American Public Works Association**
AREA	**American Railway Engineering Association**
AWS	**American Welding Society**
AWPA	**American Wood Preservers Association**
CRSI	**Concrete Reinforcing Steel Institute**
FHWA	**U.S. Department of Transportation/Federal Highway Administration**
NDS	**National Design Specifications for Stress Grade Lumber and Its Fastenings**
NFPA	**National Forest Products Association**
PCI	**Prestressed Concrete Institute**
WPA	**Western Pine Association**
WWPA	**Western Wood Products Association**

SECTION 5702 GOVERNING SPECIFICATIONS

5702.1 Roadway Bridges and Miscellaneous Structures: Design shall be in accordance with the latest edition of the following specifications and the current interim supplements thereto except as modified herein or modified for the specific project:

A. Standard Specifications for Highway Bridges, AASHTO.

B. A Policy on Geometric Designs of Highways and Streets, AASHTO.

5702.2 Railway Bridges: Railroad structures shall be designed in accordance with the current Manual for Railway Engineering, AREA.

5702.3 Light Rail - Mass Transit: Light rail - Mass Transit systems are not covered by this Criteria.

5702.4 Inspection, Rating and Posting - Bridges: Maintenance inspections, structural evaluations and ratings shall be in accordance with the latest edition of:

A. Manual for Maintenance Inspection of Bridges, AASHTO.

B. Recording and Coding Guide for the Structure Inventory and Appraisal of the Nation's Bridges, FHWA.

C. Bridge Inspector's Training Manual 70, FHWA.

D. Manual on Uniform Traffic Control Devices for Streets and Highways, FHWA.

5702.5 Welding: Welding shall be done in accordance with the Structural Welding Code, ANSI/AWS D1.1, AWS.

SECTION 5703 GEOMETRICS

5703.1 Geometric Standards: The geometry of the structure shall conform to the current AASHTO recommendations, whenever reasonably permitted by site conditions. When practical considerations dictate a variance from these criteria, the highest standards allowed by the site shall be provided.

5703.2 Horizontal Clearances:

A. **Roadway Clearance:** Roadway clearance shall conform to minimum roadway widths for bridges as shown in the current edition of A Policy on Geometric Design of Highways and Streets, AASHTO.

B. **Railway Clearance:** Railway clearance shall conform to dimensions and diagrams as promulgated by the respective railway companies and appropriate state and federal agencies.

C. **Channel Clearance:** Consideration shall be given to potential for clogging in determining size of waterway opening and location of piers.

5703.3 Vertical Clearances:

A. **Roadway Clearance:** Minimum vertical clearance shall be 14'-0" unless otherwise required by local, state, or federal regulations for certain classes of highways. If possible sixteen (16) feet should be provided plus six (6) inches for future surfacing.

B. **Railway Clearance:** Railway clearance shall conform to dimensions and diagrams as promulgated by the respective railway companies and appropriate state and federal agencies.

C. **Channel Clearance:** Channel clearance shall provide a minimum of two feet freeboard above the calculated 100-year high water elevation.

5703.4 Other:

A. **Turning Radii:** Turning radii should conform to geometric design requirements of the roadway.

B. **Utility Accommodation:** Utility companies should be consulted to determine requirements for carrying utility lines across structures. Utility facilities shall not be installed to infringe upon structure clearances.

C. **Aesthetics:** Recognizing that bridges are relatively permanent, highly visible structures, aesthetic values should be considered including proportion, function, location, design details, and workmanship to provide a structure that is visually pleasing and in harmony with its surroundings.

SECTION 5704 BRIDGE SUPERSTRUCTURES

5704.1 Lane Widths: In general, bridge superstructures should be designed such that the clear distance between curbs will accommodate 12-foot lane widths plus three feet of additional width for each outside or median lane. Lesser lane widths may be used, however in no case should they be reduced below the recommended minimum, specified in the latest edition of A Policy on Geometric Design of Highways and Streets, AASHTO

5704.2 Railings: Railings shall be provided along the edges of bridge superstructures for protection of traffic and pedestrians. A pedestrian walkway may be separated from an adjacent roadway by a traffic railing or barrier with a pedestrian railing along the edge of the bridge superstructure. The height, design loading and other requirements for the railings and barriers shall be in accordance with AASHTO Standard Specifications for Highway Bridges.

5704.3 Traffic Barriers: The height, design loading and other requirements for traffic barriers and combination traffic barrier and pedestrian railings shall be in accordance with AASHTO Standard Specifications for Highway Bridges.

5704.4 Sidewalks:

A. **Width:** The width of sidewalks on bridge superstructures shall be 4-feet minimum with a desirable width of 5-feet.

B. **Design Loading:** The design live load for sidewalks and their supporting members shall be in accordance with AASHTO Standard Specifications for Highway Bridges.

5704.5 Bikeways:

A. **General:** Bikeways on bridges shall be bicycle lanes in which a portion of the roadway has been designated for preferential or exclusive use by bicycles. They shall be distinguished from the portion of the roadway for motor vehicular traffic by a paint stripe, curb or other similar device. The bicycle lane shall carry one-way traffic and shall be a minimum of 4.0-feet wide with a desirable width of 4.5-feet. The lane width shall be increased a minimum of 0.5 foot when it is separated from traffic by a raised curb, but an increase of 1.0-foot is desirable. The bicycle lane surface shall be of asphalt or concrete similar to the material used for the adjacent roadway or pedestrian walkway.

One-Way Bicycle Lanes on Bridges

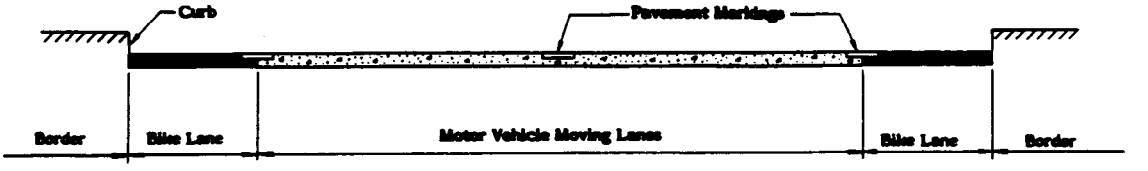

(a) Bicycle lane separated from Motor Vehicles by Pavement Markings.

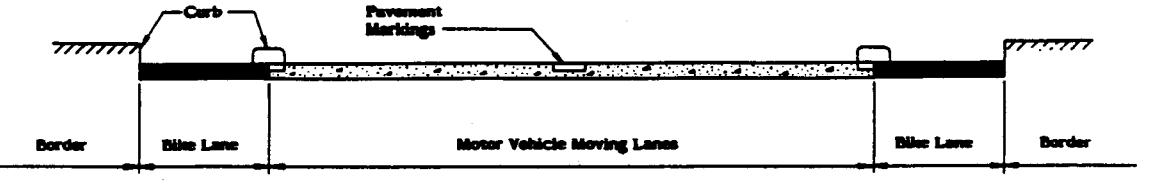

(b) Bicycle lane separated from Motor Vehicles by Curb.

5704.6 Bridge Decks:

A. General: Bridge decks should generally be constructed of reinforced concrete. The deck slabs shall be designed with adequate stiffness to limit deflections or deformations that may be detrimental to the structure at service load.

B. Materials and Components:

1. **Concrete:** Concrete for bridge decks shall be air entrained. Generally, a concrete mix providing an f_c' value of 4,000 psi should be used for design.

2. **Reinforcing Steel:** All reinforcing steel used in reinforced concrete bridge decks shall be deformed bars and shall comply with ASTM Designation A615, Grade-60 reinforcing steel. The reinforcing bars in the deck, sidewalks and barriers shall be epoxy coated.

A minimum clear distance of 1 inch measured from the bottom of the slab to the reinforcing steel shall be provided. A minimum clear distance of 2½-inches measured from the top of the slab or integral wearing surface shall be provided.

The clear distance between parallel bars shall not be less than 1½ times the nominal diameter of the bars, 1½ times the maximum size of coarse aggregate, nor 1½-inches.

3. **Wearing Surface:** A wearing surface shall be provided on bridge decks. A separate course, wet bonded to the structural concrete bridge deck, such as a high density concrete mix or trap rock aggregate mix is recommended. The thickness of the wearing course shall be 1½-inches minimum.

4. **Surface Finish:** Concrete bridge decks shall be finished with an appropriate mechanical, self propelled finishing machine after consolidation of the concrete.

5. **Surface Texture:** Before the concrete obtains initial set, the finished bridge deck shall be textured by means of transverse wire brooming.

6. **Deck Drainage:** Transverse drainage of the bridge deck shall be obtained by means of a suitable crown in the roadway. Longitudinal drainage shall be obtained by means of drain scuppers, floor drains, or an enclosed drainage system where desirable. Drainage shall be directed away from bearing and expansion devices.

7. **Approach Slabs:** Reinforced concrete approach slabs shall be provided for all structures in accordance with the lines, grades, and typical section that shall be included in the contract plans. The ends of the approach slabs adjacent to the structure shall be supported on a seat constructed with the abutment backwall. The minimum thickness of the approach slab shall be 12-inches. The approach slab may be constructed of the same class of concrete used in the bridge deck or in the approach pavement.

8. **Expansion Joints:** Bridge superstructures shall be designed to accommodate thermal expansion and contraction movements.

Watertight expansion devices shall be used at all joint locations except for integral end bents. The requirements for the expansion devices shall be in accordance with the governing agency policy or specifications.

9. **Bearing Devices:** Bearing devices shall be provided to transmit loads to the substructure elements and accommodate thermal movement and/or rotation. The requirements for the bearing devices shall be in accordance with the governing agency policy or specifications.

C. **Stay-In-Place Steel Deck Forms:** Permanent steel forms for cast-in-place concrete decks may be used in lieu of removable forms for decks supported on steel beams or girders. The stay-in-place forms may be used between exterior girders. Conventional forming methods shall be used for the cast-in-place concrete deck overhang of the exterior girders.

If permanent steel deck forms are used, shop drawings of the forms and their installation shall be prepared by the Contractor and submitted to the Engineer for approval prior to use of the forms. Complete typical details, showing minimum acceptable clear distances to form faces and any alterations to the deck slab design with the use of permanent steel deck forms, shall be shown on the shop drawings.

Permanent steel deck forms, support closure elements and accessories shall be fabricated from steel conforming to ASTM Specification A446 (Grades A through F) having a coating class of G165 in accordance with ASTM Specification A525. All other form components and accessories shall be galvanized in accordance with ASTM Specification A123.

D. **Precast Prestressed Concrete Deck Panels:** Permanent precast, prestressed concrete panels may be used in lieu of removable forms for decks supported on steel beams or girders and on prestressed concrete beams. If used, the deck panels shall be designed to act compositely with the cast-in-place portion of the structural concrete slab. The panels may be used between exterior girders. Conventional forming methods shall be used for the cast-in-place concrete deck overhang of the exterior girders.

Design, construction and installation of the panels shall be in accordance with the governing agency policy and specifications. Particular attention shall be given to provide positive support for the panels, using grout or cast-in-place deck concrete.

5704.7 Structural Systems:

A. Selection of the superstructure type shall be based on the most suitable and economical system for the particular project and conditions at the site. Preparation of a preliminary design and cost estimate for each type being considered is the preferred process for forming the basis of the final selection.

B. **Steel Rolled Beams:**

1. **Span Lengths:** Generally, steel rolled beams may be used for span lengths up to 90-feet. Economy will generally be realized if shear connectors are used on the top flange to provide composite action with the concrete deck slab.

2. **Materials:** Structural steel conforming to ASTM A36 or ASTM A572 shall be painted. Structural steel conforming to ASTM A588 may be unpainted. Welded stud shear connectors shall conform to the requirements of ASTM A108.

3. **Specifications:** Allowable stress levels shall be in accordance with AASHTO Standard Specifications for Highway Bridges. Welding shall be in accordance with AWS Specifications as modified by AASHTO Standard Specifications for Highway Bridges.

4. **Connections:** All connections and splices shall be designed in accordance with appropriate governing specifications and the details shall be shown on the contract plans. Field connections shall be made with ASTM A325 High Strength Bolts. All welded connections shall be designed in accordance with AWS and AASHTO Standard Specifications for Highway Bridges.

5. **Shop Drawings:** Prior to fabrication, the Contractor shall provide to the Engineer for review, complete shop drawings for all members and connections to assure conformance with the intent of the plans and specifications.

C. **Welded Steel Girders:**

1. **Span Lengths:** Generally, welded steel girders are economical for span

lengths in excess of 90-feet. However, under certain conditions such as curved and skewed alignments, and variable depth structures, they may be economical for lesser ranges of span length. Economy will generally be realized in multiple girder layouts if shear connectors are used on the top flange to provide composite action with the concrete deck slab.

2. **Floor Systems:** Generally, multiple steel girders with a cast-in-place concrete deck should be used for superstructure span lengths up to approximately 125 feet. For longer spans, a structural floor system comprised of fewer girders with transverse floor beams and stringers should be considered.

3. **Materials:** Structural steel conforming to ASTM A36 or ASTM A572 shall be painted. Structural steel conforming to ASTM A588 may be unpainted. Welded stud shear connectors shall conform to the requirements of ASTM A108.

4. **Specifications:** Allowable stress levels shall be in accordance with AASHTO Standard Specifications for Highway Bridges. Welding shall be in accordance with AWS Specifications as modified by AASHTO Standard Specifications for Highway Bridges.

5. **Connections:** All connections and splices shall be designed in accordance with appropriate governing specifications and the details shall be shown on the contract plans. Field connections should generally be made with ASTM A325 High Strength Bolts. All welded connections shall be designed in accordance with AWS and AASHTO Standard Specifications for Highway Bridges.

6. **Shop Drawings:** Prior to fabrication, the Contractor provide to the Engineer for review, complete shop drawings for all members and connections to assure conformance with the intent of the plans and specifications.

D. **Prestressed Concrete Beams:**

1. **General:** Various standard beam sections have been developed by the State Highway Commission or Department of Transportation. The common types are the various sizes of I-beams and the Double Stem Tee Beam. Span lengths up to approximately 50-feet may be attained with the Double Stem Tee Beam. Span lengths up to approximately 110-feet may

be attained with the I-Beams. Economy will be realized if a means of shear transfer is provided between the top flange of the I-Beam and the concrete cast-in-place deck to attain composite action.

2. **Specifications:** Allowable stress levels and design criteria shall be in accordance with AASHTO Standard Specifications for Highway Bridges and the policies of the governing local and state jurisdiction.

3. **Concrete:** The Contractor shall be responsible for the design of the concrete mix in prestressed concrete beams including the proportions of water, cement and aggregates and the ratio of fine to coarse aggregate. The minimum twenty-eight (28) day compressive strength of the concrete shall be 5,000 psi. The Contractor's proposed design mix shall be submitted for approval prior to casting any of the prestressed concrete beams. The use of calcium chloride is specifically prohibited.

4. **Steel Materials:** Steel material used in the fabrication of the beams shall conform to the following requirements:

Item	Specification
Prestressing Strands	*ASTM A416, Grade 270
Reinforcing Steel	ASTM A615, Grade 60
Welded Wire Fabric	ASTM A185
Structural Steel	ASTM A36

*Low Relaxation Strands preferred.

5. **Surface Finish:** Surface finish for prestressed concrete members shall begin immediately following removal of the forms. fins and irregular projections shall be removed. Form tie cavities, holes, honeycomb spots, and other defects, shall be thoroughly cleaned, saturated with water, and carefully pointed with mortar matching the color of the member. Repaired surfaces shall be satisfactorily cured.

6. **Connections:** All connections and splices shall be designed in accordance with appropriate governing specifications and the details shall be shown on the contract plans.

7. **Shop Drawings:** Shop drawings showing in detail the type, size, number of units, location of tendons, method and sequence of releasing the strands, anchorage details, and details of proposed lifting loops and lifting procedure shall be submitted to the Engineer for review and

approval. The shop drawings shall also tabulate critical design stresses and parameters including initial tension and total prestress load. No beams shall be cast until the shop drawings have been approved by the Engineer.

E. Reinforced Concrete Superstructures: Cast-in-place reinforced concrete superstructures may be suitable and economical for some applications, particularly for short span and special structure types. Allowable stress levels, material types and design criteria shall be in accordance with AASHTO Standard Specifications for Highway Bridges and the policies of the governing agency.

F. Timber Superstructures: Timber superstructures may be suitable and economical for some applications, particularly for temporary and special structure types. Allowable stress levels, material and design criteria shall be in accordance with AASHTO Standard Specifications for Highway Bridges and the policies of the governing agency. Additional references include the A.R.E.A. Manual of Recommended Practice and the National Design Specifications for Wood Construction.

SECTION 5705 BRIDGE SUBSTRUCTURES

5705.1 Type: The type and configuration of substructure elements shall be selected to meet project and site requirements. Foundation, aesthetic, economic and maintenance considerations shall be evaluated in the design process.

5705.2 Location: Substructure units shall be located to provide clearances as noted in Section 5703 and optimum sight distances allowed by site conditions. Where practical, they shall be situated to avoid conflict with utilities. When practical considerations allow, substructure elements at stream crossings shall be located beyond the low water channel.

5705.3 Foundation Requirements: A subsurface investigation shall be made to determine foundation requirements and available foundation options. The foundation type selected shall reflect economic considerations, ease of construction, disruption to adjacent properties and minimization of damage to adjacent facilities.

A. Spread Footings: The bearing capacity of the foundation soil may be

estimated using accepted theories. Such theories are based on the measurement of soil parameters such as cohesion and angle of friction or on the results of field tests such as the standard penetration test or the shear vane test.

The bearing capacity may also be determined by load tests in excavated foundation pits. Load tests have a limited depth influence and may not disclose long-term consolidation. For this reason load tests shall not be used without drilling or probing to determine the soil profile below the foundation.

Where testing is not carried out, the bearing capacity and angle of friction of broad basic groups of materials given in Tables A and B may be used. These values are taken from AASHTO Standard Specifications for Highway Bridges. These values should be used conservatively; for example, in determining lateral pressures, the minimum angle of friction shall be taken.

TABLE A - BEARING CAPACITY

Material	Safe Bearing Capacity Tons per Square Foot	
	Minimum	Maximum
Alluvial Soils	1/2	1
Clays	1	4
Sand, confined	1	4
Gravel	2	4
Cemented sand and gravel	5	10
Rock	5	-

TABLE B - ANGLE OF FRICTION

Material	Angle	Material	Angle
Earth, Loam	30° to 45°	Gravel	30° to 40°
Dry Sand	25° to 35°	Cinders	25° to 40°
Moist Sand	30° to 45°	Coke	30° to 45°
Wet Sand	15° to 30°	Coal	25° to 35°
Compact Earth	35° to 40°		

B. Pile Foundations: Piling should be considered when footings cannot economically be founded on rock or other solid foundation material.

Piles may be used as a protection against scour at locations where soil conditions would normally permit the use of spread footings.

Bearing values and other requirements shall be in accordance with AASHTO Standard Specifications for Highway Bridges for the particular type of pile used.

5705.4 Frost Depth: The frost depth to be used for foundation design shall be four feet. Practical site considerations will be used to determine the minimum cover, if any, over the footings.

5705.5 Scour: Substructure elements shall be designed to minimize detrimental effects of scour in stream beds. Piers and abutments subjected to scour shall be provided with some form of protection specifically designed to withstand the maximum scour anticipated.

5705.6 Collision Protection: Substructure elements with the potential for collision damage shall be provided with separate positive crash protection or be designed to resist the forces induced by a collision. Armoring shall be considered for areas subjected to impact.

5705.7 Berms at Abutments: A berm shall be provided in embankment end slopes at non-integral abutments. The berm shall be at least three feet wide and provide one foot minimum clearance to the superstructure.

5705.8 Slope Protection at Abutments: Embankments shall be provided with slope protection at abutments. The protection shall extend at least one foot beyond the limits of the superstructure and shall be designed so that storm drainage on the protected area does not run across the sides to unprotected areas.

5705.9 Maximum End Slope: The maximum embankment end slope at abutments shall be determined by the stability of the embankment material. This slope should generally not be steeper than 2:1.

5705.10 Abutment Wingwalls: The length and position of abutment wingwalls shall be designed to accommodate site conditions and earthwork

slopes so that soil and other materials do not extend onto abutment bearing seats.

5705.11 Superstructure Storm Drainage: Provisions shall be made to insure that storm drainage from the superstructure and its approaches does not cause erosion of the embankments at abutments.

5705.12 Abutment Backfill: Backfill material behind abutments shall be compacted select material. A positive drainage system (weepholes, transverse drains) shall be provided to relieve hydrostatic pressures.

5705.13 Fixity: The structural analysis of substructure elements shall reflect a condition of fixity at footings and joints which is consistent with the actual embedment of piling, reinforcement details and connection to the superstructure.

5705.14 Substructure Concrete: Concrete for substructure units extending above the ground line shall be air entrained. Concrete for footings below the ground line need not be air entrained. In general, a concrete mix with an f_c' value of 4000 psi should be used for design purposes.

5705.15 Reinforcing Steel: Grade-60 reinforcing steel shall be used for substructures.

5705.16 Structural Steel: ASTM A36 steel shall be used for structural steel bents and piles. Exposed steel members shall be painted. Field connections, except pile splices, shall be bolted.

SECTION 5706 LOADINGS

5706.1 General: Structures shall be designed to carry the following loads and forces:

Dead load.
Live load.
Impact or dynamic effect of the live load.
Wind loads.

Other possible loads and forces for consideration are:

Longitudinal forces, centrifugal force, thermal forces, earth pressure,

buoyancy, shrinkage stresses, rib shortening, erection stresses, ice and stream current pressure, and earthquake loads.

The influence of future adjacent development upon the loads to the structure shall be considered in the design whenever such loads can be reasonably anticipated.

5706.2 Dead Load: The dead load shall consist of the weight of the entire structure, including the roadway, sidewalks, car tracks, pipes, conduits, cables, and other public utility services.

5706.3 Future Dead Load:

A. **Roadway Bridges:** A minimum allowance of twenty-five pounds per square foot shall be provided for a future wearing surface.

B. **Railway Bridges:** An allowance of thirty pounds per square foot shall be provided for track raising on ballasted deck structures.

5706.4 Live Load: The live load shall be the weight of the applied moving vehicles and pedestrians.

A. **Roadway Bridges and Miscellaneous Structures:** Structures subjected to vehicular loadings shall be designed for the HS20-44 loading as a minimum load condition. A more severe loading condition shall be used when warranted by specific conditions. Consideration shall be given to additional loads resulting from the presence of sidewalks on the structure.

B. **Railroad Structures:** Structures subjected to railway loadings shall be designed for the Cooper E-80 loading unless otherwise specified by the railroad company.

5706.5 Impact: Impact allowance or increment shall be expressed as a fraction of the live load stress and shall be determined and applied according to the current governing specifications as listed in Section 5702.

5706.6 Wind Loads: Wind loads shall be determined and applied according to the current governing specifications as listed in Section 5702.

5706.7 Longitudinal Forces: The applicable longitudinal forces shall be

determined and applied according to the current governing specifications as listed in Section 5702, except the determination of the longitudinal braking force shall be modified as follows:

Provision shall be made for the effect of braking (or acceleration) in all lanes that may be expected to carry traffic traveling in the same direction during the life of the bridge. The specified reduction in load intensity for multiple-loaded lanes may be applied.

The longitudinal load due to braking in one lane shall be equal to 80% of the load of the design truck. The coincident longitudinal load in each other traffic lane shall be 5% of the lane load, including concentrated load for moment. The longitudinal force shall be applied 6-feet above the roadway surface.

5706.8 Seismic Loads: Structures shall be designed for Zone 2 seismic loadings. The current governing specifications, as listed in Section 5702, shall be used to determine the magnitude and application of the seismic load.

5706.9 Other Forces: The following forces when they exist shall be determined and applied according to the current governing specifications as listed in Section 5702:

A. Thermal Forces
B. Earth Pressure
C. Buoyancy
D. Shrinkage Stresses
E. Rib Shortening
F. Ice and Current Pressure
G. Erection Stresses
H. Uplift

5706.10 Sidewalk, Curb and Railing Loading: Sidewalk, curb and railing loadings where applicable shall be determined and applied according to the current governing specifications as listed in Section 5702.

5706.11 Unusual Vehicle Loads: The term "Unusual Vehicle Loads" describes various types of transportation vehicles that can be placed on bridge structures other than the standard design truck outlined in AASHTO.

Bridge structure live loads resulting from "Unusual Vehicle Loads" encompass the following modes of transportation: (1) railroads; (2) aircraft; (3) mining and "off-road" vehicles; (4) light rail transit; (5) other transit systems; (6) military; and (7) construction.

The live loads associated with this category of loads, except railroads, are not specifically covered by this specification. The determination and application of these loads shall be the responsibility of the Engineer.

SECTION 5707 ROADWAY DRAINAGE

5707.1 General: Drainage of stormwater at bridge locations shall be designed in a manner consistent with the criteria used for design of the adjacent street storm drainage system. Reference is made to Section 5600 of the Standard Specifications and Design Criteria, APWA, K.C. Metro Chapter.

5707.2 Design Considerations for Deck Drainage: Provisions shall be made to drain the deck surface of bridges by means of scuppers, longitudinal drains, or other suitable means. The design storm shall be the storm suitable for design of the adjacent roadway storm sewer system. Roadway grade shall be designed to provide positive longitudinal drainage.

5707.3 Discharge: Discharge points shall be selected to minimize erosion, hazard to traffic beneath the bridge, or damage to the bridge structure. Where possible, runoff shall be conveyed in pipes to the roadway storm sewer system. Refer to Section 5705, Bridge Substructures, on prevention of damage to embankments, and abutment protection.

SECTION 5708 FLOODWAY HYDRAULICS - URBAN AREAS

5708.1 General: Design of bridge waterway openings shall conform to all special requirements imposed by Federal, State and local agencies. Often, conditions exist where more than one method of analysis will be required to provide the information and data needed for review and approval by the various agenices. Design shall consider present and potential land use upstream and downstream. Data gathered, prior to design, shall include available historic information concerning flood flows, Flood Plain Information reports, Flood Insurance Study reports and studies or plans for any possible flood improvement projects in or near the proposed site.

5708.2 Flood Design Frequency: In general, all bridge openings should be designed to pass the 100-year flood. Lesser magnitude of floods may be considered under certain circumstances such as:

Flow over the roadway.
Land use.
Relief structures.
Severe restrictions upsteam or downstream that are not likely to be removed during life of the proposed structure.

5708.3 Backwater Control: Increase in backwater elevation caused by the proposed structure shall be limited to 1.0-foot above existing backwater elevation unless restricted by other considerations. Lesser increases in backwater may be required due to land use, defined floodways under the National Flood Insurance Program, or undesirable velocities through the proposed opening. Consideration shall be given to downstream structures and land use when a substantial increase in flood carrying capacity is contemplated for a given site.

Backwater analyses shall be performed using current state of the art methods such as the Department of the Army Corps of Engineers, HEC-2 program; Federal Highway Administration Hydraulic Design Series No. 1, Hydraulics of Bridge Waterways method; or other methods that are approved by reviewing agencies.

5708.4 Erosion Protection: Existing conditions at the proposed bridge site shall be reviewed for erosion and scour problems. In-depth scour studies may be warranted at certain sites. The bridge opening and substructure shall be protected against damage from scour.

Channel velocities for existing and proposed conditions shall be determined. Adverse changes in velocities through the site may warrant bank and embankment protection. Front slopes of bridge abutments or end bents that intersect or nearly intersect the channel bank or channel bottom shall be protected up to the design high water elevation. Roadway embankment protection, parallel to the roadway shuld extend to the end of the wingwalls.

The roadway embankment shall be protected against erosion at locations where high velocities or turbulence may occur such as side ditches, bridges with severe skew, channel meander, relief structures, and overflow sections where the roadway is frequently overtopped. See Section 5605.2.C for design velocity with respect to conditions of channel lining material.

Removal of natural channel and bank protection shall be avoided if possible.

If the design solution includes a roadway overflow section that is frequently overtopped, road closure gates, warning devices and lighting shall be provided to protect the public.

SECTION 5709 EVALUATION OF EXISTING STRUCTURES

5709.1 Scope: This section governs the procedures and policies for determining the physical condition and maintenance needs of existing structures according to the current governing specifications as listed in Section 5702.4 except as modified herein.

5709. 2 Posting:

A. Weight Limit: The safe load for posting shall be calculated as greater than 55% but less than 75% of the yield strength of the bridge member controlling the rating. The rating should be calculated as the lesser of the values of either the Standard H-truck or the 352 semi-trailer configuration unless otherwise specified by the City Engineer.

B. Closure Limit: No bridge shall be posted for a weight of less than three (3) tons. A bridge shall be closed if not capable of carrying three (3) tons.

C. Exceptions:

1. **Speed Limit:** A reduced speed limit may be used to allow bridges to carry heavier loads by decreasing impact or by avoiding high speed collisions on structures with limited roadway clearance. The speed limits established should be limited only to vehicles which are affected by the need to reduce impact.

2. **Special Load Permit:** A special permit should be required by the local governing agency for all vehicles with a gross weight in excess of the posted load limit. Such weights should not exceed the Operating Rating for the structure.

5709.3 Sufficiency Rating for Metro Area: A Sufficiency Rating for each structure shall be determined using the formula described in Appendix A, Recording and Coding Guide for the Structure Inventory and Appraisal of the Nation's Bridges. The percentage number obtained by the use of this formula can be used as a guideline for the decision to replace or repair a structure.

Recommended guidelines are as follows:

Sufficiency Rating <50	Replace
Sufficiency Rating ≥ 50 but ≤ 80	Repair or Rehabilitaiton
Sufficiency Rating >80	Annual Maintenance

SECTION 5710 MISCELLANEOUS STRUCTURES

5710.1 Scope: This section governs the design of miscellaneous structures which includes retaining walls, areaways, reinforced concrete box culverts, curb inlets, field basins and junction boxes.

5710.2 Retaining Walls:

A. **General:** Retaining walls shall be designed to withstand earth pressure, including any live load surcharge where appropriate, and the weight of the wall.

Stone masonry and plain concrete walls shall be gravity type. Reinforced concrete walls may be a cantilever, counterforted, buttressed, or cellular type.

B. **Loads:**

1. **Earth Loads:** Structures which retain fills shall be proportioned to withstand pressure as determined by Rankine's formula. No structure shall be designed for less than an equivalent fluid weight of 30-pounds per cubic foot. A vertical earth load of 120-pounds per cubic foot shall

be used in the absence of soil tests. Consideration shall be given to increased pressure due to sloping fill behind the wall.

2. **Vehicular Surcharge Loads:** Vehicular surcharge loads shall be considered when applied within a horizontal distance from the top of the wall equal to or less than one-half its height. This surcharge pressure added with the live load surcharge pressure shall be equal to or greater than the pressure generated by 2-feet of earth for streets or 10-feet of earth for railroads.

   When loads are applied at a horizontal distance in excess of one-half of the wall height, the application of surcharge pressures shall be at the discretion of the Engineer.

   Pressures shall be modified as required when the surcharge load is above the top of the wall.

3. **Concentrated or Partial Loads:** Concentrated or partial loads which are located within a distance less than the full height of the wall shall be converted to equivalent soil height loads and appropriate horizontal pressures shall be calculated and applied in addition to the normal earth load pressures.

C. Design Considerations:

1. **Sliding and Overturning Factor of Safety:** The desired safety factor for both sliding and overturning is 2.0 and the minimum safety factor for both is 1.5.

2. **Coefficient of Friction:** In the absence of soil tests, a friction coefficient of 0.40 may be used in coarse granular soil.

3. **Force of Friction:** The total frictional force on the base of a footing is $F = fN$ where f is the friction coefficient and N is the normal force of the footing against the soil.

4. **Force of Cohesion:** When the foundation rests on clay, the cohesion should be used to determine the force resisting sliding. This cohesion

force may be calculated using one-half of the unconfined compressive strength of the soil as the unit cohesion.

5. **Stability:** When resistance to sliding cannot be adequately provided by friction resistance of the footing, a soil shear key, piling or other positive restraint shall be considered. When pile footings are used, the outer row should be battered to resist horizontal forces.

D. **Joints:** Contraction joints shall be provided at intervals not exceeding 32-feet and expansion joints at intervals not exceeding 96-feet for gravity or reinforced concrete walls.

E. **Drainage and Backfill:** All retaining walls shall be designed to withstand earth pressure. Walls are generally not designed to resist water pressure in addition to the earth pressure. To relieve the hydostatic pressure, drains commonly consisting of pipes known as weepholes with a diameter of 2 to 4-inches shall extend through the stem of the wall. Weepholes shall be protected against clogging by pockets of wrapped gravel in the backfill. These drains shall be spaced at suitable intervals, not to exceed 12-feet both vertically and horizontally. In counterfort walls, there shall be at least one drain in each pocket between adjacent counterforts.

Granular materials such as clean sands and gravels shall be used for backfill adjacent to the wall.

5710.3 Curb Inlets, Field Basins and Junction Boxes:

A. **General:** Curb inlets, field basins, and junction boxes shall be designed to withstand earth pressure, including any live load surcharge and vehicular wheel loads where appropriate.

B. **Loads:**

1. **Earth Loads:** The structure shall be proportioned to withstand pressure as determined by Rankine's formula and no structure shall be designed for less than an equivalent fluid pressure of 30-pounds per cubic foot.

2. **Live Load Surcharge:** A surcharge pressure of not less than 2-feet of earth shall be added to the normal earth pressure to compensate for vehicular traffic effects.

3. **Vehicular Wheel Loads:** All structures which are subjected to vehicular traffic shall be designed to carry a 16,000-pound wheel load distributed according to AASHTO guidelines.

C. **Design:** Standard curb inlets, field basins or junction boxes which have been adopted by local authorities may be used in lieu of special designs required by this specification.

5710.4 Areaways:

A. **General:** Areaways shall be designed to withstand all imposed loads.

B. **Loads:**

1. **Dead Loads:** When calculating dead loads, the recommended unit weights for soil and pavement are 120-pounds per cubic foot and 150-pounds per cubic foot respectively.

   The structure shall be designed to withstand pressure as determined by Rankine's formula in addition to any hydrostatic pressure. No structure shall be designed for less than an equivalent fluid pressure of 40-pounds per cubic foot.

2. **Vehicular Wheel Loads:** The top slab of an areaway which is subjected to vehicular traffic and which has less than 2-feet of cover shall be designed for a 16,000-pound wheel load distributed according to the governing specifications as listed in Section 5702.

   When the depth of fill is 2-feet or more, the design analysis shall include a concentrated 16,000-pound wheel load uniformly distributed over a square with sides equal to 1-3/4 times the depth of fill.

   When pressure distribution areas from several concentrations overlap, the total load shall be uniformly distributed over the area defined by the outside limits of the individual areas, however the total width of distribution shall not exceed the total width of the supporting slab. For

single spans, the effect of live load may be neglected when the depth of fill is more than 8 feet and when the depth of fill exceeds the span length. For multiple spans the effect of live load may also be neglected when the depth of fill exceeds the distance between end support faces.

A minimum lateral surcharge pressure equal to 2-feet of additional earth shall be used to compensate for vehicular live loads.

3. **Sidewalk Loads:** All sidewalk areaway structures which are not subjected to vehicular traffic shall be designed for a combined dead load, soil pressure and uniform live load of 250-pounds per square foot with a concentrated live load of 2,000-pounds. The concentrated load shall be applied according to paragraph (2) of this subsection.

5710.5 Reinforced Concrete Box Culverts

A. Reinforced Concrete Box (Cast-in-Place):

1. **Materials:**

   a. **Concrete:** The minimum 28- day compressive strength (f_c') shall be greater than 3,000-pounds per square inch.

   b. **Reinforcement:** Reinforcing steel bars shall be deformed new billet steel conforming to ASTM A-615-Grade-60. Welded-wire fabric shall conform to ASTM A-185 Grade-65.

2. **Design:**

   a. **General:** All structures shall be designed in accordance with the governing specifications as listed in Section 5702.

   b. **Loading:** The appropriate HS20 live load or Cooper E-80 live load along with all applicable dead loads and soil loads shall be applied as required. Special care shall be taken to insure the proper determination of the concentrated live load distribution through any fill material over the box.

c. **Earth pressures:** Vertical and horizontal earth pressures shall be computed by recognized or appropriately documented analytical techniques based on the principles of soil mechanics and soil structure interaction. Minimum design pressures shall be calculated based upon the following equivalent fluid weight for boxes supported on yielding foundations:

For vertical earth pressure - 120 pounds per cubic foot

For lateral earth pressure - 30 pounds per cubic foot
(granular, drained backfill)

For boxes on unyielding foundations,
a special analysis shall be made.

If actual design conditions would produce larger than minimum design pressures the larger pressures shall be used.

d. **Reinforcement Cover Requirements:** The following minimum concrete cover shall be provided for reinforcement, except that appropriate typical state highway or approved local standard reinforced concrete box designs may be used in lieu of this specification.

Casting Type	Minimum Cover Inches
Concrete cast against & permanently exposed to earth	3
Concrete exposed to earth or weather	
Primary reinforcement	2
Stirrups, ties, and spirals	1-1/2
Top slab	
Top reinforcement	
Slab with 2-feet or less cover	3
Slab with more than 2-feet cover	2
Bottom reinforcement	1

Casting Type	Minimum Cover Inches
Concrete not exposed to weather or in contact with ground	
Primary reinforcement	1-1/2
Stirrups, ties, and spirals	1

B. Reinforced Concrete Box (Precast):

1. **General:** Boxes may be manufactured using conventional structural concrete and forms (formed) or with dry concrete and vibrating form pipe making methods (machine-made). Standard dimensions shall meet appropriate current governing specifications as listed in Section 5702.

2. **Design, Materials, and Loading Requirements:** Manufacture and design shall be in accordance with ASTM C789, "Precast Reinforced Concrete Box Sections for Culverts, Storm Drains and Sewers" or ASTM C850, "Prestressed Reinforced Concrete Box Structures for Culverts, Storm Drains and Sewers with Less Than Two Feet of Cover Subject to Highway Loadings." Clearances to reinforcement as specified by ASTM shall be approved by the City Engineer.

SECTION 5711 PLAN REQUIREMENTS

5711.1 Scope: This section governs the preparation of construction plans for bridges, culverts, retaining walls and other miscellaneous structures.

5711.2 General: The plans shall include all information necessary to build the structure in accordance with the design and specifications. The plans shall be arranged as required by the City Engineer. Standard Plans of the City may be included by reference to Standard Plan Number and Title. The Cover Sheet or Title Sheet of the plan set shall bear the seal of a Professional Engineer registered in the State of the City or governing agency. The plans shall be submitted to the City Engineer for review and approval.

5711.3 Scales: Plans shall be drawn at the following minimum scales. Larger scales may be needed and shall be used where necessary to clearly present the design. Bar scales shall be shown on each sheet for each scale used.

Plan:	1-inch = 50-feet
Profile:	
Vertical:	1-inch = 10-feet
Horizontal:	1-inch = 50-feet
Structural Plans:	1/4-inch = 1-foot
Graphic Drawings:	Varies

5711.4 Required Information:

A. **Cover or Title Sheet:** A Cover or Title Sheet shall be included and shall contain the following minimum information:

1. City, County, and State of agency responsible for the project.
2. Project name, identification and project number.
3. List of drawings in the plan set.
4. Location Map showing the general area and directional orientation of the project.
5. List of Utility Companies with facilities in the project site.
6. Approval block for signature by City Engineer, Director of Public Works or other Officials.

B. **General Plan and Elevation Drawing:** The General Plan and Elevation drawing shall show to scale the alignment, grade, span layout, roadway and sidewalk widths, general construction type and other principal features of the structure. The drawing shall contain the following additional minimum information:

1. General notes indicating the governing design loadings, design specifications, construction specifications, material requirements, and allowable stress levels for the principal materials of construction. Other notes shall include the following:

   a. Hydraulic data that is the basis for design of the structure.
   b. Traffic data and design speed.
   c. Datum used for the structure and/or project.
   d. Other miscellaneous notes pertaining to principal features of the structure such as concrete compressive strength (f'_c) and yield strengths or grades of reinforcement.

2. North arrow and bar scale.
3. Ties to permanent reference points for the structure.
4. Right-of-way, property, and easement lines.
5. Existing, man-made, and natural topographic features, such as streets, buildings, fences, trees, channels, ponds, streams, etc., and all existing and proposed utilities.
6. Location of test borings.
7. Existing and finish grade contours at intervals of 2.0 -feet or less in elevation; or equivalent detail indicating existing and finish grades and slopes.
8. A uniform set of symbols subject to approval by the City Engineer.
9. The centerline of any open channels including the direction of flow.
10. A cross section view of the structure showing roadway configuration and dimensions if requested by the City Engineer.
11. A tabulation of material quantities and bid items, if not included in the project specifications, and if requested by the City Engineer.

C. **Design Information For Each Element of the Structure:** The plans shall present design and detail information as necessary to construct each abutment, pier, and superstructure system included in the completed structure. The drawings shall include the following minimum information:

1. **Reinforced Concrete Members:**

   a. Overall dimensions of the concrete element or member to an accuracy of 1/8-inch.
   b. Reinforcing bar size location and spacing.
   c. Reinforcing bar splice locations and lap dimensions.
   d. Clear distance to outside faces of member or minimum concrete cover requirements for reinforcing bars.
   e. Full details of all connections and joint requirements.
   f. A station and alignment reference, including north arrow for each abutment or pier.
   g. A detailed list of reinforcing bars, weights and bending diagrams if requested by the City Engineer.
   h. Chamfer and fillet dimensions.
   i. All other details and requirements for construction of the member in accordance with the design.

2. **Structural Steel Members:**

   a. Overall dimensions of the structural steel elements or members to

an accuracy of 1/16-inch.

b. Framing plan for main members and cross bracing.
c. Girder elevation details showing material widths and thickness for flanges and webs.
d. Diagrams for required camber in members and tables or diagrams showing dead load deflections in members.
e. Generally, dead load deflections shall be shown at 1/4-points for rolled beam spans and 1/10-points for welded girder spans. Deflections shall be shown for the weight of the structural steel only and also for the total dead load of the completed superstructure.
f. Complete details for all connections, and weld sizes and requirements.
g. Complete details for all splices including splice material dimensions, and bolt size and spacing.
h. All other details and requirements for fabrication of the member in accordance with the design.

3. **Prestressed Concrete Members:**

a. Overall dimensions of the members to an accuracy of 1/8-inch. The maximum use shall be made of State Standard Sections, Standard Drawings, and fabrication procedures.
b. Size, material grade, spacing and layout of all prestress tendons.
c. Section views showing the location of all tendons between harp points and at the ends of the member.
d. Size, spacing, location and bending diagrams for all mild steel reinforcement in the member.
e. Table showing the theoretical camber for each girder and the concrete slab haunch dimensions at 1/4-points of the spans. Values shall be shown for the theoretical camber of the girder after erection and after the deck has been placed.
f. Other information as required for fabrication of the members in accordance with the design.

4. **Other Drawings:** Other drawings shall be included in the plans to present requirements for the structure. These drawings may include the following:

a. Pile size, spacing and other foundation requirements, including subsurface boring logs.
b. Expansion Joints.
c. Bridge railing and guardrail.
d. Traffic maintenance and detour requirements.
e. Lighting and signing plans.

SECTION 5800 – STREET LIGHTING

CITY OF LEE'S SUMMIT, MISSOURI
DESIGN CRITERIA

The City of Lee's Summit hereby replaces Section 5800 of the Kansas City Metropolitan Chapter of APWA Design Criteria with the City of Lee's Summit Design and Construction Manual Section 5800.

TABLE OF CONTENTS

Section	Title	Page
5801	GENERAL	2
5801.1	Scope	2
5801.2	System Composition	2
5801.3	Modification of Design Criteria	2
5802	DESIGN CRITERIA	2
5802.2	Illuminance Standards	2
5802.3	Placement of Street Lights	2
5802.4	Street Light Poles	3
5802.5	Luminaires	3
5802.6	Spare Equipment	4
5803	ELECTRICAL SYSTEM	4
5803.1	Standards	4
5803.2	Distribution System	4
5803.2.3	Junction and Pull Boxes	4
5803.2.5	Circuits	5
5803.2.10	Break-Away Connectors	5
5803.3	Power Supplies	5
5803.4	Secondary Service	6
5803.5	Pole Numbering	6
5804	PLAN REQUIREMENTS	6
5804.2	General	6
5804.3	Private Improvements	6
5804.4	Sheet Size	6
5804.5	Types of Sheets in Plans	6
5804.5.1	Cover Sheet	7
5804.5.2	General Notes Sheet	7
5804.5.3	Street Lighting Plan Sheets	7
5804.5.4	Wiring Diagram Sheet	8

5801 GENERAL

5801.1 Scope: These criteria shall be adhered to for the design of all publicly-financed or privately-financed street lighting systems to be installed in the public street right-of-way or of major and minor arterial roadways. The City Traffic Engineer shall be responsible for determining the scope of a street lighting system.

5801.2 System Composition: The street lighting system shall consist of one (1) or more power supplies, distribution systems, poles, luminaires, and other appurtenances required to provide a complete, operable system. Components of the system shall conform to the specifications of Section 2802 MATERIALS AND EQUIPMENT.

5801.3 Modification of Design Criteria: These criteria are established to provide uniform procedures to aid the Design Engineer in preparing improvement plans for projects in the City of Lee's Summit. These criteria are not to be a rigid set of rules that would restrict the Design Engineer from utilizing creative or original design; however these criteria may be modified only with prior authorization by the City Traffic Engineer.

5802 DESIGN CRITERIA

5802.1 These criteria shall be followed when specifying the type and placement of equipment for a street lighting system. Copies of the City's Specifications and Standard Drawings are available through the Engineering Division.

5802.2 Illuminance Standards: The street lighting design and layout shall be based on the illuminance criteria for continuous roadway lighting in the latest edition of the American National Standard Practice for Roadway Lighting, Illuminating Engineering Society of North America (ANSI/IESNA RP-8).

5802.3 Placement of Street Lights: The street lighting system layout required is dictated by the street classification and is typically continuous. Photometric analysis shall be utilized to calculate the theoretical spacing of street lights to meet the illumination standards for each street classification. The City Traffic Engineer should be consulted to determine the appropriate street classification. The location of street lights shall conform to the criteria below.

5802.3.1 Several values are needed to complete the photometric analysis. A lighting loss factor (LLF) of 0.70 should be utilized. The minimum maintained average illuminance values and the average-to-minimum illuminance ratios listed below are based on the 2000 Edition of the Standard Practice. The values for the R2/R3 pavement surface reflective classification are used.

Illumination Standards

Roadway Classification	Area Type	Minimum Maintained Average Illumination (foot-candles)	Average-to-Minimum Illuminance Uniformity Ratio
Arterial	Commercial	2.0	3:1
	Intermediate	1.7	3:1
	Residential	1.3	3:1
Collector	Commercial	1.7	4:1
	Intermediate	1.3	4:1
	Residential	0.9	4:1

5802.3.2 The actual spacing of street lights should be the possible spacing nearest to the calculated theoretical spacing. At locations where additional lighting may be beneficial, such as around curves or at intersections, pole spacing may be reduced to improve the lighting levels.

5802.3.3 Street lights can be installed in raised medians with straight curb faces that have a minimum width of four feet (4') between backs of curbs, and in mountable medians that have a minimum width of twelve feet (12') between edges of pavement. Street lights located in medians shall be installed as close as possible to the center of the median. All street light poles in medians shall be a minimum of fifteen feet (15') behind the median nose.

5802.3.4 Street lights should be located to have a minimum clearance of eight feet (8') from all overhead utilities.

5802.3.5 At a roundabout controlled intersection, a minimum of two (2) street lights should be located around the circular roadway, diagonally across from each other. On arterial type roadways, a minimum of four (4) street lights should be placed around the outside of the circulatory roadway. The spacing between the poles should be approximately equal to achieve uniform lighting throughout the roundabout. Street lights on the approaches to roundabouts should also be considered on multi-lane approaches, in areas with high traffic volumes, or where pedestrian traffic is expected.

5802.4 Street Light Poles: Street light pole types, differentiated by mounting height and bracket arm length, are illustrated in the Standard Drawings. Equipment to be utilized should be selected based on the criteria listed below.

5802.4.1 Screw-in anchor bases are assumed to be used for all bases wherever possible. If rock is encountered and a screw-in anchor cannot be screwed into the ground, then the screw-in anchor can be installed within a pre-drilled hole and backfilled with flowable fill, or a concrete base can be poured. Screw-in anchor bases are not to be installed in soils that have been disturbed.

5802.4.2 All street light poles shall have a minimum setback of three feet (3') measured from the back of curb to the center of the pole base on a curbed street. The minimum setback for a non-curbed street shall be six feet (6') measured from the edge of pavement to the center of the pole base. The minimum setback may be reduced to two feet (2') in raised medians.

5802.4.3 Luminaires should be installed at a maximum mounting height of forty feet (40') above the roadway. Poles mounted on structures, such as bridges and retaining walls, may require special lengths as not to exceed the maximum mounting height.

5802.4.4 Bracket arms should be selected to position the luminaire over the traveled way for greatest utilization of available light. The bracket arms should be oriented 90-degrees, or perpendicular, to the traveled way. Bracket arm lengths should be selected in order to position the luminaires in a straight line when looking down the roadway.

5802.4.5 Decorative street light poles are allowed only with the authorization of the Director of Public Works.

5802.5 Luminaires: All luminaires should utilize High Pressure Sodium (HPS) lamps. Other types of lamps may be utilized with the authorization of the City Traffic Engineer. Street lights on residential collector or local roads shall consist of 100-watt or 150-watt HPS lamps. Street lights on arterial or commercial/industrial collector roadways shall consist of 250-watt or 400-watt HPS

lamps. All luminaries must be fully shielded (emit no direct uplight) and should at a minimum meet the requirements of the IESNA classification for cutoff light distribution.

5802.6 Spare Equipment: For most projects, the City will require the Contractor to supply spare street light pole, bracket arm, luminaire, and break-away base assemblies. One (1) spare assembly should be included for every forty (40) poles to be installed. When non-standard or decorative poles are used, the City may require additional spare street light pole assemblies.

5803 ELECTRICAL SYSTEM

5803.1 Standards: The electrical system shall comply with the National Electrical Code (ANSI/NFPA 70), the National Electrical Safety Code (ANSI C2), and the service standards issued by the appropriate electrical utility company that will be supplying power to the street lighting system. The Design Engineer shall coordinate and verify the location of proposed feed points with the utility company to ensure availability of service.

5803.2 Distribution System: The following criteria shall govern the design of the electrical distribution system.

5803.2.1 Conduit: The distribution system shall be underground in two inch (2”) diameter Schedule 40 polyvinyl chloride (PVC) conduit or high density polyethylene (HDPE) conduit. Cable-in-duct may be installed for projects in mostly unpaved areas. If conduit is to be installed on a structure, galvanized rigid steel (GRS) conduit should be used. GRS conduit shall be attached to the structure with conduit hangers as shown in the Standard Drawings.

5803.2.2 Except where it crosses under a street, the conduit shall be behind the back of curb or outside the edge of pavement. The conduit should be installed at a constant offset from the back of curb or edge of pavement preferably at the same distance as the pole setback, unless a common trench is being used. The minimum setback from the street to the center of the conduit should be the same as that specified for street light poles except in medians, where conduit setback may be closer to the back of curb to avoid landscaping. The setbacks may have to be adjusted in places to avoid storm sewers, utility conflicts, or other obstructions.

5802.2.3 In unpaved areas, conduit can be trenched or plowed. Conduit shall be bored under all sidewalks, drives, and streets unless otherwise approved by the City Traffic Engineer. Boring under streets shall be perpendicular to the roadway or the shortest possible crossing distance.

5082.4 The length of conduit is calculated by adding the center to center distances between equipment. All of the center to center distances should be subtotaled and multiplied by 102% to allow for bending of conduit to avoid obstructions.

5803.2.4 Junction and Pull Boxes: Junction or pull boxes shall be installed at each location where splices in the distribution cable are required outside the pole base or where sharp 90-degree bends in conduit are required. The distance between boxes and/or street light poles shall not exceed three hundred feet (300’) to facilitate the pulling of cable. Boxes must be installed at least five feet (5’) away from street light poles. The installation of boxes in sidewalks should be avoided while the installation of boxes in streets and driveways is prohibited. The minimum setback from the street to the center of boxes should be the same as specified for street light poles. Type 1 junction boxes shall be used if one or two (1 or 2) conduits enter/exit the box. Type 2 junction boxes shall be used where three or four (3 or 4) conduits enter/exit the box. A Class 1

pull box shall be located adjacent to each four-circuit power supply, or where five or more (5 +) conduits enter/exit the box.

5803.2.5 Circuits: All circuits shall be two hundred forty volts (240V). Distribution cable shall be sized so that the voltage drop does not exceed five percent (5%) at any point in the system. The Design Engineer is required to submit voltage drop calculations. Three conductor (3c) cables shall be used for each circuit, which are no larger than No. 4 AWG and no smaller than No. 8 AWG.

5803.2.6 Each street lighting circuit shall be contained in a separate conduit, except for the conduit raceway between a four-circuit power supply and the adjacent class 1 pull box. For that raceway, two (2) conduits will be required. The distribution cable for each of the lighting circuits shall be routed through one of these two conduits into the pull box, and then routed out to the first pole for each circuit in separate conduits. Double taps on a circuit breaker are not allowed.

5803.2.7 Street lighting cable is permitted in traffic signal conduit runs and pull boxes, but not within conduits and pull boxes designated for traffic signal interconnect. Street lighting circuits are to enter a traffic signal pole through the adjacent traffic signal pull box. The distribution cables are to be spliced in the traffic signal box (if necessary), and run into the traffic signal pole base. Street lighting cable shall not run through (or terminate in) the traffic signal controller cabinet.

5803.2.8 The length of distribution cable is calculated by adding the center to center distances between all equipment on a circuit. The length of all cable should be subtotaled and multiplied by 102% to allow for bending. Five feet (5’) of slack should be added at each light pole base or power supply. Slack should also be added for junction and pull boxes; two feet (2’) at each Type 1 junction box, three feet (3’) at each Type 2 junction box, and five feet (5’) at each Class 1 pull box.

5803.2.9 Pole wiring from the distribution cables to each luminaire shall be two conductor No. 10 AWG (2c #10) pole and bracket cables. The length of pole and bracket cable for each pole is calculated by adding the nominal pole height, the length of the bracket arm and five feet (5’) of slack. This quantity is then multiplied by two for poles with dual luminaires.

5803.2.10 Break-Away Connectors: Each distribution cable shall be connected to the corresponding pole and bracket cable using a break-away connector. Two (2) fused connectors should be used for the hot leads, and one (1) non-fused connector should be used for the ground as shown in the Standard Drawings.

5803.2.11 All street light poles shall be bonded together to form a continuous system. A No. 6 AWG bare solid copper ground wire enclosed in one inch (1”) PVC conduit shall be securely attached to a ground rod with a galvanized grounding clamp at each concrete street light pole base, at each screw-in anchor base backfilled with flowable backfill, and at each power supply base.

5803.3 Power Supplies: As shown in the Standard Drawings, one-circuit or four-circuit power supplies shall be utilized. Power supply bases should be located within the right-of-way or general utility easements and be adjacent to and behind the sidewalk, or at least ten feet (10’) from the back of curb to the center of the power supply where no sidewalk exists. In locations where no curb exists, the power supply should typically be placed more than ten feet (10’) from the edge of pavement to the center of the power supply if possible. Each power supply should be

located at least 10 feet (10') from its secondary service point. When the location of the power supply has been finalized and the secondary service point has been verified with the electrical utility company, the City will provide the Design Engineer with an identification number for each proposed power supply. Each power supply shall contain a photoelectric cell, oriented to the north. If headlights from southbound traffic will be directed at the photoelectric cell, it should be oriented to the east.

5803.4 Secondary Service: A 2-1/2 inch (2½") Schedule 40 PVC conduit with a pull string shall be installed from the power supply to the base of the secondary service point (utility pole, secondary pedestal, or pad-mount transformer) as designated by the electrical utility company. The conduit should be installed in a straight horizontal line in accordance with the Standard Drawings. Junction or pull boxes are not permitted in the conduit run between the power supply and secondary service point unless authorized by the electrical utility company. The electrical utility company will supply and install the power cable.

5803.5 Pole Numbering: Street light poles shall be numbered using the power supply identification number followed by the circuit number and pole number. For example the first pole on circuit number 1, from power supply number 6K05 should be labeled as 6K05-1-1. The second pole on the circuit shall be labeled 6K05-1-2.

5804 PLAN REQUIREMENTS

5804.1 This section governs the preparation of engineering plans for a street lighting project.

5804.2 General: The street lighting plans shall include all information necessary to build and check the design of a street lighting system. For new developments, the street lighting plans shall be submitted with the public improvement plans (if any) and shall clearly show public street and stormwater drainage improvements and utilities in a deemphasized manner. The cover sheet for the plans shall be signed and sealed by a Missouri Registered Professional Engineer responsible for preparing the plans. The signed and sealed plans shall be submitted to the City Traffic Engineer for review and approval prior to construction.

5804.3 Private Improvements: If any private improvements are shown on the public improvement plans, they shall be clearly defined and marked as such. An appropriate note shall be included on the drawings stating that these private improvements will not be maintained by the City of Lee's Summit. This section is not intended to imply that private improvements will be allowed within the public right-of-way.

5804.4 Sheet Size: The full-size plan sheet size for improvement plans shall be twenty-two inches by thirty-four inches (22"x34"). Full-size and half-size plans are required for all submittals. All sheets in a given set shall be the same size.

5804.5 Types of Sheets in Plans: The improvement plans shall consist of the following:

Cover Sheet (if necessary)

General Notes

Street Lighting Plan Sheet(s)

Wiring Diagram(s)

City of Lee's Summit Street Lighting Standard Drawings

Traffic Control Details (if necessary)

Each sheet should contain proper project identification, the type of sheet, a sheet number, including the individual sheet number and the total number of sheets, and dates of when the plans were originally prepared and all revisions. See the City's example street lighting plan set for reference.

5804.5.1 Cover Sheet: A cover sheet is not required if street lighting is included as a part of a plan set for a larger improvement project. If necessary, the cover sheet shall include the following information:

A. The project title, centered at the top of the sheet as follows:

CITY OF LEE'S SUMMIT, MISSOURI
PUBLIC WORKS DEPARMENT/ENGINEERING DIVISION
STREET LIGHTING IMPROVEMENTS FOR
[Name of Roadway], from [start point] to [end point]
Engineering Project Number [when applicable]
Date

The City logo shall appear to the left of the last four lines.

B. An index of the sheets included in the plans.
C. A list containing the name and telephone number of each utility company and the State One-Call System.
D. The name, address, and telephone and fax numbers of the Design Engineer.
E. The name, address, and telephone and fax numbers of the owner/developer, where applicable.
F. A vicinity map adequately showing the project location in relation to major streets and the section in which it is situated, with a north arrow and appropriate scale.
G. A signature block to be signed and sealed by the Missouri Registered Professional Engineer responsible for preparing the plans.

5804.5.2 General Notes Sheet: See the City's example street lighting plans for a sample sheet. This sheet should contain a legend of symbols that apply to all sheets, a recapitulation of quantities table, and a list of general notes to the Contractor including any project specific notes. The lighting design calculations and criteria should also be included in the project specific notes.

5804.5.3 Street Lighting Plan Sheet(s): The street lighting plan sheet(s) shall include the following information:

A. One or more plan sheets adequately showing the street lighting system in relation to the streets and adjacent properties, with a north arrow, and a bar scale at a minimum scale of one inch (1") equals fifty feet (50'), unless a larger scale is specified by the City Traffic Engineer.
B. All existing and proposed utilities such as power, gas, water, telephone, cable, sanitary sewer, storm sewer, and other items shall be accurately shown according to the best available information in the records of the owner of the facility, or field location, and shall be identified as to type, size, material, etc., as may be applicable. Existing utilities should be shown in gray.

C. The base plans shall show all existing and proposed easements and right-of-way information. All existing and known proposed improvements within fifty feet (50') each side of the right-of-way and one hundred feet (100') beyond the project limits shall be shown at their proper locations unless otherwise approved or required by the City Project Engineer. These improvements shall include items such as street pavement, curbs and gutters, sidewalks and driveways, storm and sanitary sewers, water mains and fire hydrants, utility poles and pedestals, trees and shrubs, fences and walls, buildings, and similar items, and shall be identified as to type, size, material, etc., as may be applicable. Irrelevant items may be omitted for new developments. Existing items should be shown in gray. New non-street lighting items may be shown with a thin black line. Future non-street light items may be shown with a dashed line.

D. Street lighting equipment should be identified by station and offset. Street centerline stations should be shown and marked at one hundred-foot (100') intervals. If station and offset are not indicated, the locations of proposed street lighting equipment should be referenced from existing features that appear on the base plans, such as the back of curb, edge of pavement, utility poles, etc.

E. Each item to be constructed or installed for the project should be legibly noted. Minimum font size shall be 0.125 inch on a 22" x 34" sheet size. Each power supply should be labeled with the identification number assigned by the City. Street light poles should also be labeled with the power supply identification number, circuit number and pole number as described in Section 5803.5.

F. There should be a table listing the pole number, station, offset, and bracket arm lengths for all proposed poles. There should also be a table listing the box number, station, offset and type of box for all proposed junction and pull boxes. All proposed equipment shall be listed in the order in which it is located in the plans.

5804.5.4 Wiring Diagram Sheet(s): See the City's example street lighting plans for a sample sheet. This sheet should contain wiring diagrams (overall schematics of the street lighting system) for each power supply. The center to center distance between street light equipment should be indicated on the diagram. A summary table for each circuit should also be included on this sheet indicating the conductor size, circuit length, input amperage, percent voltage drop, circuit assignment at the power supply, and circuit breaker trip rating.

SECTION 5900 – TRAFFIC SIGNALS

CITY OF LEE'S SUMMIT, MISSOURI
DESIGN CRITERIA

TABLE OF CONTENTS

Section	Title	Page
5901	GENERAL	2
5902	DESIGN CRITERIA	2
5902.1	Codes and Standards	2
5902.2	Signal Phasing	2
5902.3	Signal Heads	2
5902.4	Emergency Preemption	3
5902.5	Video Detection	3
5902.6	Detector Loops	3
5902.7	Traffic Signal Boxes	4
5902.8	Conduit	4
5902.9	Power Supply	4
5902.10	Signal Poles	5
5902.11	Controller Cabinet Assembly	5
5902.12	Wiring	5
5902.13	Timing	6
5902.14	Overhead Signs	6
5902.15	Traffic Signal Interconnect	6
5903	PLAN REQUIREMENTS	6
5903.1	General	6
5903.2	Private Improvements	6
5903.3	Sheet Size	7
5903.4	Types of Sheets in Plans	7
5903.5	Title Sheet	7
5903.6	General Notes and Legend Sheet	8
5903.7	Traffic Signal Plan Sheet	8
5903.8	Interconnect Plan Sheet	9
5903.9	Wiring Sheet	9
5903.10	Equipment Quantities Sheet	9

5901 GENERAL: These criteria shall be adhered to for the design of all publicly financed or privately financed traffic signal systems to be installed in the public street right-of-way or on other public property under the jurisdiction of the City of Lee's Summit, Missouri.

5902 DESIGN CRITERIA: The traffic signal system shall consist of the signal controller, signal poles, signal heads, cable, conduit, detection, communication equipment, and any other appurtenances required to provide a complete, operable traffic signal system. Components of the system shall conform to the City's Technical Specifications. Equipment used shall be from the City's Approved Products List. Copies of the City Standard Plan and Detail Sheets, as well as the Approved Products List, are available through the Traffic Engineering Division.

5902.1 Codes and Standards: These criteria are established to provide uniform procedures to aid the design engineer in preparing improvement plans for projects in the City of Lee's Summit. These criteria are not intended to be an ironclad set of rules that restrict the design engineer from utilizing innovative design; however, they may be modified only with prior authorization of the City Traffic Engineer.

In addition to these requirements, all work shall conform to the requirements of the latest edition of the *Manual on Uniform Traffic Control Devices* (MUTCD).

5902.2 Signal Phasing: When designing a traffic signal (new installation or modification), the signal phasing (number and sequence of the phases) shall be discussed with the City. Traffic signal phasing will be illustrated on the plans using a NEMA diagram (examples below). The City uses two standard phasing sequences, depending on whether the main-street/coordinated movements are north-south or east-west:

East-west street is coordinated/major

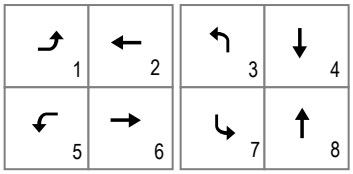

North-south street is coordinated/major

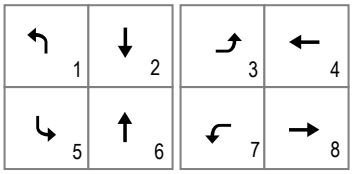

5902.3 Signal Heads: All vehicular traffic signal heads shall be 12 inches in diameter. Traffic signal heads shall be placed in accordance with the MUTCD. In addition, some guidelines in an effort to standardize the placement of signal heads are below:

A. Typically, a standard three-section head should be centered over each exiting lane for all through lanes of traffic.

B. When a left-turn lane is provided without left-turn phasing, no separate signal head should be provided for the left-turn movement.

C. When protected left-turn phasing is specified, the three-section head should typically be centered over the left-turn lane. Likewise, when dual left-turn movements are specified, a separate indication should be centered over each left-turn lane. A separate LEFT TURN SIGNAL sign (R10-10) shall accompany each indication.

D. When protected/permissive left-turn phasing is specified, a five-section head should be placed over the extension of the channelization line between the left-turn lane and

the adjacent through lane. The head shall be accompanied by a LEFT TURN YIELD ON symbolic green ball sign (R10-12).

These placement criteria are to be used as guidance by designers. Special situations may arise in which alternate arrangements are appropriate. Deviations from the above criteria must be approved by the City Traffic Engineer. See also Section 5902.10 for information on mounting heads to mast arms.

All traffic signal and pedestrian indications shall be LED. Pedestrian signals should include countdown displays. In addition, backplates shall be provided for all traffic signal heads that are mounted to the mast arm. Signal heads that are mounted to the signal pole will be evaluated for backplates on a case-by-case basis.

5902.4 Emergency Preemption: Opticom emergency preemption equipment shall be shown on the signal plan and shall be designed for ALL directions of traffic at an intersection, with the possible exception of private drives. Generally, Opticom discriminators should be placed on far-side mast-arms.

5902.5 Video Detection: Unless otherwise specified by the City Traffic Engineer, video detection should be used for stop bar detection at all signal installations. The video detection system shall be per the City Approved Products List. Typically, one camera per approach will be used, unless special needs dictate otherwise. The camera should typically be mounted to the luminaire arm that is attached to the traffic signal pole. If there is no luminaire arm, the camera should be mounted to the signal mast arm via a six-foot riser arm. The manufacturer's representative shall be consulted to determine the proper placement of the video cameras; and documentation shall be obtained from the manufacturer's representative indicating that the placement is acceptable. In addition to the video detectors, detection zones should also be illustrated and numbered on the signal plan. Detection zones are typically shown 6' x 50', centered in the lane, with the leading end of the zone two feet in advance of the stop line.

5902.6 Detector Loops: Typically, detector loops should only be used for advance detection, and should be 6 feet x 6 feet, centered in the lane. Advance detector loops should only be used on streets with posted speeds of 40 mph or more, and should be placed at standard distances as illustrated in the diagram at right (measured from the back of the stop bar to the back of the loop).

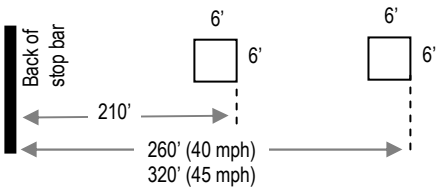

5902.7 Traffic Signal Boxes: Pull boxes should typically be provided whenever conduit changes direction and adjacent to signal poles and controllers. Pull boxes should typically be used adjacent to detector loop locations for the splicing of loop wire to the lead-in cable. The type of box used is based on the number of conductors entering the box, as shown in the table at right. Pull boxes should be installed at least 1 foot 6 inches from the back of curb to the center of the box and no closer than 2 feet to any pole. The distance between traffic signal boxes should not exceed 200 feet to facilitate the pulling of cable.

Box Type Criteria

Conductors entering box	Required Box Size
0 - 22	17”W x 30”L x 22”D (Class 1)
23 – 68	24”W x 36”L x 26”D (Class 2)
> 68	30”W x 48”L x 36”D (Class 3)

Traffic signal box lids (including interconnect) shall be labeled “TRAFFIC SIGNALS”.

5902.8 Conduit: All conduit for traffic signal installations shall be either Schedule 40 polyvinyl chloride (PVC) conduit or Schedule 40 high density polyethylene (HDPE) conduit, except for conduit that will remain exposed (such as an above-ground run to the power supply), which should be rigid metal.

Signal conduit that extends from signal poles to adjacent pull boxes should typically be a minimum 3-inch conduit, while signal conduit that extends from the signal controller to the adjacent pull box should consist of two 4-inch conduits. Any conduit crossing the street should be a minimum of 4 inches. Signal conduit for advance detectors and interconnect cable should typically be 2-inch conduit.

Typical Conduit Sizes

signal poles to adjacent boxes	3”
controller to adjacent pull box	2-4”
street crossing	4”
advance detection	2”
interconnect	2”

Street lighting cable is permitted in signal conduit runs and boxes. The conduit sizes above are typical applications. No street lighting cable should run though (or terminate in) the traffic signal controller cabinet.

At new installations where interconnect is **not** required, an additional 2-inch conduit run from the controller to the adjacent pull box (with pull string) should be included for potential future interconnect.

The Design Engineer shall verify that the signal conduit is properly sized so that no more than 40 percent of the conduit cross-sectional area is filled. For estimating conduit quantities, center-to-center distances should be used.

5902.9 Power Supply: The Design Engineer shall coordinate and verify the location of the proposed power supply with the appropriate utility company to ensure availability of service.

A service disconnect should be located between the controller and the power supply. The service disconnect should be located as close to the power supply as possible. A 2-inch conduit with a pull string should extend from the power supply to the service disconnect, and a 2-inch conduit with a 3-conductor cable should extend from the service disconnect to the signal controller. See the diagram at right.

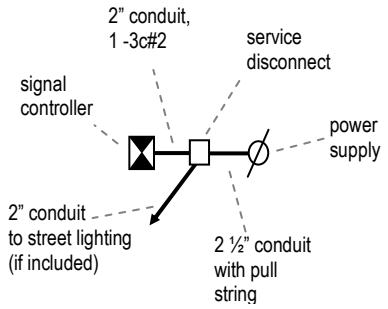

5902.10 Signal Poles: Signal poles shall typically be located a minimum of 6 feet from the back of curb (or edge of pavement, where there is no curb) to the center of the pole. However, no signal pole, pole base, or appurtenance shall be located within 2 feet of the face of curb or edge of shoulder. Signal poles shall typically not be located in a median or channelizing island. When pedestrian signal heads are used, signal poles with push buttons should be placed at locations that comply with, to the extent possible, with all Americans with Disabilities Act (ADA) provisions. At a maximum, the push button should be located within 5 feet of the crosswalk extended; within 10 feet of the edge of curb, shoulder or pavement at its closest point; and be accessible. This may require the use of pedestrian push button pedestals. The City does not require that signal poles be aligned with the crosswalk locations. However, the pedestrian heads shall be visible for pedestrian traffic.

Pole foundations, except pedestals, should be flush-mounted Type B except in locations without curb and locations where the posted speed limit is greater than 45 mph. At these locations, a Type A foundation (with a conical base that extends above ground) should be used, unless otherwise required by maximum bolt pattern described on the standard drawings. All pole foundations, except pedestals, at an intersection shall be of the same Type.

Astrobrackets (not prefabricated nipples) should be used for attaching signal heads to poles.

5902.11 Controller Cabinet Assembly: Controller Cabinets should typically be located adjacent to and behind the sidewalk or at least 10 feet from the back of curb to the center of the controller where no sidewalk exists. In locations where no curb exists, the controller should typically be placed more than 10 feet from the edge of pavement to the center of the controller if possible.

Master controllers shall be provided as part of all closed loop systems at the direction of the City.

The controller type and manufacturer shall be per the City's Approved Product List. The controller should be delivered to the City in advance of installation for programming. A note regarding delivery to the City should be on the plans.

5902.12 Wiring: The City has standardized the number of conductors required for the various types of traffic signal equipment.

Vehicle signal heads should be fed by 7-conductor cable. Typically, the City uses two cables per through phase and one per left-turn phase for the vehicle signal heads, regardless of how many heads are on the mast arm or the signal pole. The first through-phase cable terminates at the head mounted on the pole shaft, and the second through-phase cable extends to the end of the mast arm, with the mast arm through heads being fed by jumpers.

Pedestrian signal heads and pushbutton detectors, when used, should be fed by separate cables extending from the controller to the signal pole: one 5-conductor for each pedestrian head on the pole, and one 2-conductor for each pushbutton detector on the pole.

Detector lead-in cable (for advance detection) should consist of 2-conductor shielded cable. Detector loop wire should consist of single-conductor PVC/nylon with tube jacket.

Interconnect cable should be copper twisted pair (3), unless otherwise directed by the City Traffic Engineer (or designee).

Street lighting cable for traffic signals should typically consist of 1-2c No. 8 AWG wire from the power supply to the luminaire. Street lighting cable for luminaires on signal poles should be spliced inside the pull box adjacent to the pole. If street light poles are integrated with the traffic signal system the street light poles should have break-away accommodations and be wired according to the street lighting standards and specifications.

In estimating quantities, cable slack should be computed according to the table at right.

Location	**Slack (each cable)**
pull-box: pass-through	6’
pull-box: termination	3’
controller	8’
vehicular signal head	13’
pedestrian signal head	10’
pedestrian pushbutton	9’
service disconnect	12’

The City prefers right-turn overlaps to be hard-wired. This is done by connecting the yellow and green arrows in the signal head to appropriate field terminals.

Splicing of cables will not be allowed.

5902.13 Timing: Traffic signal timings will be provided by the City Traffic Engineer and will **not** be shown on the plans.

5902.14 Overhead Signs: Typically, the overhead street name signs should be placed between the signal pole and the first vehicle signal head. On major arterial streets, commercial collector streets, and within the downtown area, internally illuminated street-name signs may be used, in consultation with the City Traffic Engineer.

The designer will compute the sign dimensions and show them on the plans. Lettering sizes are included in the City’s standard plans.

5902.15 Traffic Signal Interconnect: At locations specified by the City Traffic Engineer or where a new traffic signal is to be constructed within a half-mile of a new or existing traffic signal, interconnection of the traffic signals (see Section 5902.11) is typically required. Box labeling and spacing should be as per Section 5902.7.

At new installations where interconnect is not required, future interconnect conduit should be installed as per Section 2.8.

5903 PLAN REQUIREMENTS: This section governs the preparation of improvement plans for a traffic signal project.

5903.1 General: The traffic signal plans shall include all information necessary to build and check the design of a traffic signal system. For new developments, the traffic signal plans shall be submitted with the public improvement plans (if any) and shall clearly show public street and stormwater drainage improvements and utilities in a de-emphasized manner. The plans shall be arranged as required by the City. The title sheet for the plans shall be signed and sealed by a Missouri Registered Professional Engineer responsible for preparing the plans. The signed and sealed plans shall be submitted to the City for review and approval prior to construction.

5903.2 Private Improvements: If any private improvements are shown on the public improvement plans, they shall be clearly defined and marked as such. An appropriate note shall be included on the drawings stating that these private improvements will not be maintained by the City of Lee’s Summit. This section is not intended to imply that private improvements will be

allowed within the public right-of-way.

5903.3 Sheet Size: The sheet size for improvement plans is twenty-two inches by thirty-four inches (22”x34”). Full-size and half-size plans are required for all submittals. All sheets in a given set shall be the same size.

5903.4 Types of Sheets in Plans: The improvement plans shall typically consist of the following sheets:

Title Sheet
General Notes and Legend Sheet
Traffic Signal Plan Sheet
Interconnect Plan Sheet (if needed)
Wiring Sheet
Equipment Quantities Sheet
Pavement Marking and Signing Plan (if needed)
Traffic Control Plan (if needed)
Special Detail Sheets (if needed)
Standard Detail Sheets
Survey Plan Sheet(s) (if needed)

Each sheet should contain proper project identification, the type of sheet, a sheet number, including the individual sheet number and the total number of sheets, and dates of when the plans were originally prepared and all revisions. See the City’s example signal plan set for reference.

City Standard details should be included in the plan set.

5903.5 Title Sheet: The title sheet shall include the following information:

A. The project title, centered at the top of the sheet as follows:

CITY OF LEE’S SUMMIT, MISSOURI
PUBLIC WORKS DEPARTMENT
TRAFFIC SIGNAL INSTALLATION
(Name of Intersection)
(City Project Number, Bid Number When Applicable)

The City logo shall appear to the left of the project title.

B. An index of the sheets included in the plans.
C. A list of applicable City Standard Details, Legend, General Notes. (As Needed)
D. A list containing the name and local telephone number of each utility company and the State One-Call System.
E. The name, address, and telephone and fax numbers of the design engineer.
F. The name, address, and telephone and fax numbers of the owner/developer, where applicable.

G. A vicinity map adequately showing the project location in relation to major streets and the section in which it is situated, with a north arrow and approximate scale.

H. A signature block to be signed and sealed by the Missouri Registered Professional Engineer responsible for preparing the plans.

I. An approval block for the signature of the City and the date of such approval. The approval block shall be as follows:

Approved _____ Date: _____20__.
City Traffic Engineer

J. Note that traffic volume information need not be shown in the plans unless required by another reviewing agency (e.g., MoDOT).

5903.6 General Notes and Legend Sheet: See the City's example signal plans for a sample sheet. The general notes and legend sheet shall include the following information:

A. A list of general notes to the contractor.
B. A legend of symbols that apply to all sheets.
C. Project specific notes.

5903.7 Traffic Signal Plan Sheet: See the City's example signal plans for a sample sheet. The traffic signal plan sheet shall include the following information:

A. One or more plan sheets adequately showing the traffic signal system in relation to the streets and adjacent properties, with a north arrow, and a bar scale at a minimum scale of one inch (1") equals twenty feet (20'), unless a larger scale is specified by the Engineer.

B. All existing and proposed utilities such as power, gas, water, telephone, cable, sanitary sewer, storm sewer, and other items shall be accurately shown according to the best available information in the records of the owner of the facility, or field location, and shall be identified as to type, size, material, etc., as may be applicable. Existing utilities should be shown in gray.

C. All existing and known proposed improvements within fifty feet (50') each side of the right-of-way and one hundred feet (100') beyond the project limits shall be shown at their proper locations unless otherwise approved or required by the Engineer. These improvements shall include items such as street pavement, curbs and gutters, sidewalks and driveways, storm and sanitary sewers, water mains and fire hydrants, utility poles and pedestals, trees and shrubs, fences and walls, buildings, and similar items, and shall be identified as to type, size, material, etc., as may be applicable. Irrelevant items may be omitted for new developments. Existing items should be shown in gray. New non-signal items may be shown with a thin black line. Future non-signal items may be shown with a dashed line.

D. Pole locations. Typically, signal equipment does not need to be identified by station and offset unless stationing is available. If the signal is part of an improvement project for which stationing and controls have been developed, street centerline stations should be shown and marked at one hundred-foot (100') intervals for consistency between the signal and improvement plans. Pole locations should be

referenced from the curb or pavement edge using a schematic location diagram on the signal plan sheet (see City example signal plans) and with station and offset when available.

The plans should clearly show the proposed placement of all traffic signal equipment including; power supply assembly, power source, poles, heads, opticom, cameras, signs, street lights, junction and service boxes, conduit, loops, and controller cabinet. The items to be constructed or installed for the project should be legibly noted.

5903.8 Interconnect Plan Sheet (if needed): If interconnect to an adjacent signal (or signals) is part of the design, a separate interconnect plan may be included. This plan should be at a minimum scale of 1 inch = 60 feet and should identify all conduit and boxes necessary to provide a complete interconnect system. The plan should also include notes (and details, if necessary) identifying how connections will be made in each controller. The plan should include a quantity table indicating total length of conduit and wiring; as well as the total number of boxes.

Interconnect cable should be included in the Wiring Diagram on the Wiring Sheet (see Section 3.9). Interconnect conduit and boxes should **not** be included on the Equipment and Quantities sheet, but an asterisked (*) note should be included there, directing the reader to the Interconnect Plan Sheet.

5903.9 Wiring Sheet: See the City's example signal plans for a sample sheet. This sheet should include the following information:

A. A Wiring Diagram (an overall schematic of the traffic signal system, including interconnect if any).
B. A NEMA signal phasing diagram and sequence diagram should be displayed and should follow the City's standard phasings (see Section 2.2).
C. A table of output file assignments.
D. A table of flash operations
E. A table for power supply information.

5903.10 Equipment Quantities Sheet: See the City's example signal plans for a sample sheet. This sheet should contain a Posts Table, a Traffic Signal Bases and Boxes Table, a Cable and Conduit Table, a Signal Heads Table, a Controller and Misc. Equipment Table, and a Signs Table. If there are no other quantity sheets as part of the plan submittal, a Pavement Marking Table, and Traffic Control Table may also be included.

SECTION 6500 - SANITARY SEWERS

CITY OF LEE'S SUMMIT, MISSOURI
DESIGN CRITERIA

6501 DESIGN CRITERIA

A. General

1. The design standards presented in the City of Lee's Summit Design Criteria are the minimum standards to be followed in the design and construction of the Lee's Summit public sewerage system. These standards are not intended to be used as a substitute for actual construction specifications and design computations.

2. For new development (including infill or redevelopment), the existing sanitary sewers shall have adequate capacity to accommodate additional development with no adverse impacts on the existing system or customers.

3. Where sewer lines are extended into the interior of a lot, the sewer line shall not be considered a public sewer main.

4. Pipe Designations

   Force Mains: Force mains are classified as mains transporting wastewater from a pumping station to a sanitary sewer manhole. Force mains are shown in the City's currently-adopted Master Plan. Force mains shall not be tapped.

5. Grid System

   Sanitary Sewers shall be generally located as shown in the City's currently adopted Master Plan.

6. The Missouri Department of Natural Resources (MDNR) must review all sanitary sewer plans after they are reviewed by the City. No construction can take place until MDNR comments are incorporated.

B. Design Factors

1. Sewerage systems shall be sized to provide for the entire watershed in the City's currently adopted Comprehensive Plan and in accordance with the Wastewater Master Plan based upon ultimate growth.

2. The City of Lee's Summit recognizes the impact that extraneous flows (infiltration and inflow) have on sewer capacities.

C. Capacities

1. Peak wastewater flows shall be used to design sanitary sewers for non-residential lands of greater than 100 acres and all residential lands and shall consist of the following three components:

SANITARY SEWERS

a. Peak Base Flow (PBF): Base flow is defined as the normal wastewater flow generated in the sanitary sewer system exclusive of infiltration and inflow.

   i. The peak base flow or peak dry weather flow (PDWF) used for residential land in Lee's Summit is 1,500 gallons per day per acre (gpd/ac).

   ii. The peak base flow to be used for non-residential land in Lee's Summit is calculated using the equivalent dwelling unit (EDU) methodology described in Paragraph 6501.C.2.

b. Peak Infiltration: Infiltration is defined as groundwater entering the system through defective pipes, pipe joints, and manholes. Peak infiltration is considered the maximum infiltration that occurs during the highest groundwater level period of the year.

   i. The peak infiltration used for residential land in Lee's Summit is 500 gpd/ac.

   ii. The peak infiltration to be used for non-residential land in Lee's Summit is 250 gpd/ac.

c. Peak Inflow: Inflow is defined as rainfall-related water entering the collection system from sources such as private building sewers, down spouts, foundation drains, sump pumps, and cross connections.

   i. Peak inflow is determined by the following equation:

$$Q = KiA$$

   where

   Q = peak inflow, cubic feet per second (cfs)
   (1.0 cfs = 646,317 gpd)
   K = inflow factor
   i = rainfall intensity that corresponds to a tributary area's time of concentration, inch per hour (iph)
   A = tributary area, acres (ac)

   ii. Lee's Summit shall use a K = 0.006 and K = 0.003 for residential and non-residential land, respectively, and a 50-year storm event. Inflow is directly influenced by the intensity and duration of a storm event and is not a fixed quantity.

   iii. The time of concentration can be calculated by the following equation:

$$T_c = 18.56\,(A)^{0.2524}$$

   where

   T_c = time of concentration, minutes (min)
   A = tributary area, ac

d. The rainfall intensity can be determined using the table below and the tributary area's T_c as calculated above. Use interpolation to calculate rainfall intensities for T_c not listed in the table.

Year	Time of Concentration (min)									
	5	10	15	30	60	120	180	240	360	600
	Rainfall Intensity (iph)									
1	4.48	3.53	3.05	2.09	1.41	0.86	0.60	0.47	0.35	0.25
3	5.84	4.77	4.13	2.90	1.93	1.18	0.86	0.69	0.51	0.36
5	6.47	5.34	4.63	3.28	2.17	1.32	0.97	0.79	0.58	0.40
10	7.33	6.12	5.32	3.79	2.50	1.52	1.13	0.93	0.68	0.47
25	8.46	7.16	6.22	4.47	2.93	1.78	1.34	1.12	0.80	0.56
50	9.32	7.94	6.91	4.98	3.26	1.98	1.50	1.26	0.90	0.62
75	9.82	8.40	7.31	5.27	3.46	2.10	1.59	1.34	0.96	0.66
100	10.18	8.72	7.59	5.49	3.59	2.18	1.65	1.39	1.00	0.69

e. Peak Flow = Peak Base Flow + Peak Infiltration + Peak Inflow

2. For non-residential lands greater than 8 acres and less than 100 acres in total area, sewer capacity shall be calculated using the EDU methodology described below:

a. An EDU is a ratio of the flow produced by a particular land use compared to the flow produced by a single residential housing unit. A single residential unit is 1.0 EDU and produces 300 gallons per day (gpd) of peak daily flow. All other land uses are given EDU values that are a ratio to that 1.0 EDU value and are based on the anticipated flow rate.

b. Table 1 lists common types of non-residential developments. For each type of source, an EDU value is assigned based on the parameters of the building. Each EDU is estimated to produce 300 gpd of peak daily flow, which is based on the assumption of an average of 100 gpd per capita and 3 capita per residence. Calculating the total number of EDUs for a site establishes a value for the peak base flow.

c. Using the EDU values in Table 6501-1 and the parameters defined for each source, the following formula shall be used to estimate the peak base flow for non-residential development ($PBF_{Non\text{-}res}$):

$$PBF_{Non\text{-}res} = EDU * \text{Building Area} * \text{Stories} * 300 \text{ gpd}$$

where

$PBF_{Non\text{-}res}$ = Peak base flow (gpd)

EDU = Equivalent development units per 1000 ft^2 (see Table 6501-1)

Building Area = Building footprint area in thousands of square feet (1000 ft^2)

Stories = Total building stories (see Table 6501-2)

This formula only applies to the sources listed in Table 6501-1 that have "per 1000 ft^2" indicated as the parameter. To calculate the $PBF_{Non\text{-}res}$ for other sources listed in the table, multiply the EDU for the parameter by the appropriate number, then multiply it by 300 gpd (e.g., an 100-bed hospital would have a $PBF_{Non\text{-}res}$ = [0.8 EDU/bed x 100 beds] * 300 gpd = 24,000 gpd).

d. Peak infiltration and peak inflow can be calculated using the values and equation for non-residential land found in Paragraph 6501.C.1. Alternatively, Figure 6501-3 shows a graph of the combined peak infiltration and inflow values. Figure 6501-3 shall not be used for areas less than 8 acres. Note that Figure 6501-3 **does not** include the peak base flow.

Peak Flow = $PBF_{Non\text{-}res}$ + Peak Infiltration + Peak Inflow

3. For non-residential lands greater than 100 acres or smaller than 8 acres, the residential land method shall be used to calculate sewer capacity, as described in Paragraph 6501.C.4.

4. Sewer capacity for residential land shall be calculated using the equations shown in Paragraph 6501.C.1 or the design curves shown in Figures 6501-1 and 6501-2. For example, in Figure 6501-1, a tributary area of 450 acres corresponds to a design flow of 0.019 cfs/ac, or 5.53 million gallons per day (MGD). This design flow shall be used to size the sewer pipe.

D. Hydraulic Design

1. Minimum Pipe Size: No public sewer shall be less than 8 inches in diameter. The downstream sewer pipe shall have the same or larger nominal diameter as the upstream pipe. Building sewers and building sewer stubs for industrial, commercial, and residential development shall not be less than 4 inches in diameter.

2. Hydraulic Grade

a. Average Velocity: Sewers shall be designed to be free flowing with the hydraulic grade below the top of pipe and above the hydraulic grade line of the existing downstream system into which the sewer discharges, including the Little Blue Valley Sewer District (LBVSD) and Middle Big Creek Sub-District (MBCSD), where applicable, and with hydraulic slopes sufficient to provide an average velocity when running full of not less than 2.25 feet per second (fps). Computations of velocity of flow shall be based on the following Manning's formula.

b. Manning's Formula:

$$V = \left(\frac{1.486}{n}\right) R^{2/3} S^{1/2}$$

$$Q = \left(\frac{1.486}{n}\right) A R^{2/3} S^{1/2}$$

where

V = Velocity (fps)
Q = Pipe flow capacity (cfs)
A = Inside area of pipe (square feet, ft^2)
R = Hydraulic radius (feet, ft)
S = Pipe slope (ft/ft)
n = Pipe roughness coefficient

n values: Values for n shall be according to manufacturers' recommendations, or as follows:
Polyvinyl chloride (PVC) – 0.014
Ductile iron pipe (DIP) – 0.015
High-density polyethylene (HDPE) –0.015

c. Maximum Velocity:

i. The maximum permissible velocity at average flow shall be 15 fps. Average flow is defined as peak base flow plus peak infiltration, or 2,000 gpd/ac.

ii. Drop manholes shall be provided to break the steep slopes to limit the velocities to 15 fps in the connecting sewer pipes between manholes (see Paragraph 6501.H.5). Where drop manholes are impracticable for reduction of velocity, the sewer shall be fitted with concrete restraints at 15 foot intervals along the slope to limit movement of the pipe or shall be restrained joint pipe.

d. Minimum Slopes: The following are minimum slopes in feet per hundred feet to be provided for pipes flowing full depth to one-fourth of full depth:

Sewer Size (inch)	Slope (ft per 100 ft)
8	0.60
10	0.42
12	0.33
15	0.24
18	0.19
21	0.16
24	0.13
30	0.13
36	0.13
42	0.13

e. Hydraulic Grade Line: Calculations of the hydraulic grade line (HGL) for the peak base flow and peak infiltration and inflow shall be submitted to the City with the engineering plans. The Design Engineer shall consider the HGL of the LBVSD or MBCSD interceptor in their design. Calculations shall also consider the HGLs of basins, pump stations, wet wells and any other storage facilities, at maximum capacity, that may reasonably be expected to affect the functioning of the designed system. HGLs shall be shown on the Engineering Plans and revised as needed on the record drawings.

f. Smaller Sewer Joining Larger Sewer: When a smaller sewer joins a large one, the invert of the larger sewer should be lowered sufficiently to maintain the same energy gradient. An approximate method for accomplishing this is to place the 0.8 depth point of both sewers at the same elevation.

g. Minimum Drop across Inverts: There shall be a minimum drop of 0.2 feet between the upstream and downstream sewer pipe inverts when the deflection angle between the incoming and outgoing pipes is less than 45°. Provide a minimum drop of 0.5 feet between the upstream and downstream sewer pipe inverts when the angle between the incoming and outgoing pipes is greater than 45°.

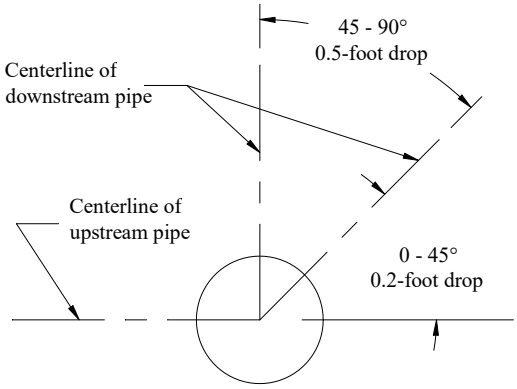

E. Sewer Mains

1. Location

a. Within or Adjacent to Right of Way: When sewer mains are placed in or adjacent to the right-of-way (R/W), sewers shall be located as follows:

i. Sanitary sewer mains shall be located at least 5 feet from back of curb except at bulbs of cul-de-sacs, and with an embankment slope of 3:1 or flatter.

ii. Street crossings shall be bored under existing streets.

iii. All boring excavations shall be located no closer than 2 feet from the back of the curb and with a minimum depth not less than 36 inches from the finished grade to the top of the sewer pipe.

iv. Where sidewalks will be placed on the same side of the street as the sewer main, the sewer main shall be located at least four feet from the sidewalk outside the right of way in a utility easement.

b. Away from Right of Way: When placed away from and outside the right of way, sewer mains shall be located as follows:

i. Sewer mains shall be installed in easements with an embankment slope of 3:1. or flatter.

ii. Sewer mains shall not be located in the rear of the property

iii. Sewer mains shall be located in the center of the easement.

c. Separation from Other Pipes:

i. Factors: The following factors should be considered in providing adequate separation:

(a) Materials and type of joints for water and sewer mains.
(b) Soil conditions.
(c) Service and branch connections into the water main and sewer main.
(d) Compensating variations in the horizontal and vertical connections.
(e) Space for repair and alterations of water and sewer mains.
(f) Offsetting of mains around manholes and other sewer structures.

ii. Parallel Installation: Sanitary sewers or force mains shall be laid at least 10 feet horizontally from any existing or proposed water main and at least 5 feet horizontally from any storm sewer. The distance shall be measured edge to edge.

iii. Crossings:

(a) Sewer mains crossing water mains shall be laid to provide a minimum vertical clear distance of 18 inches between the outside of the sewer main and the outside of the water main. This shall be the case where the sanitary sewer is either above or below the water main.

(b) At crossings, a full length of sewer pipe shall be located such that both joints will be as far from the water main as possible.

(c) Where conditions prevent the minimum vertical separation set forth above from being maintained, the following shall be applied:

(i) The sewer line shall be laid with ductile iron pipe which shall extend on each side of the crossing to a distance from the water main of at least 10 feet.

(ii) In making such a crossing, a full length of ductile iron pipe must be centered over or under the water main to be crossed so that the joints will be equidistant from the water main.

(d) Provide special structural support for the pipes as necessary.

(e) Minimum crossing angle shall be 45 degrees.

d. Separation from Structures:

i. Manholes and Other Utility Structures:

(a) No sewer main shall be located closer than 10 feet horizontally to any part of water main structures or vaults.

(b) No sewer main be located closer than 5 feet to any part of a storm sewer curb inlet, junction box, or other storm sewer structure.

ii. Buildings: Public sanitary sewer shall be at least 15 feet from any building, but not less than the depth of cover over the sanitary sewer main.

iii. Retaining Walls: Sewer mains shall be located so that maintenance on the sewer main will not jeopardize the structural integrity of the wall. Location shall comply with Section 5700.

e. Drainage Courses and Streams:

i. The location of sewer mains relative to drainage courses and streams shall be designed to comply with Section 5600.

ii. Pipelines crossing drainage courses and streams shall be designed to cross as nearly perpendicular as possible. Pipeline shall be laid on a uniform grade.

iii. Pipelines shall be designed to minimize the number of crossings.

iv. Ductile iron pipe (DIP) with restrained joints shall be used for all drainage courses and stream crossings. The ductile iron pipe shall extend from manhole to manhole.

f. Non-Aerial Crossings:

Depth of Cover: The top of all sewer mains entering or crossing streams shall be at a sufficient depth below the natural bottom of the stream bed to protect the pipeline. The following cover requirements must be met:

(a) When bedrock is less than 24 inches below the bottom of the channel, the pipe shall be trenched into bedrock and shall have at least 12 inches of cover.

(b) When bedrock is 24 or more inches below bottom of channel, the pipe shall have at least 36 inches of cover.

(c) In paved stream channels, the top of the pipeline shall be at least 12 inches below the bottom of the channel pavement.

(d) All non-bore crossings shall be encased in concrete.

g. Aerial Crossings

i. Ductile iron pipe with restrained joints shall be used for all aerial crossings.

ii. Support Structures:

(a) Support shall be provided at all joints in pipe utilized for aerial crossings.

(b) All support structures for stream crossings shall be located in accordance with Section 5600.

iii. Precautions against freezing, such as insulation and increased slope, shall be provided. Expansion jointing shall be provided between aboveground and belowground pipe.

iv. The impact of floodwaters and debris shall be considered in the design of aerial stream crossings. The bottom of the pipe shall be placed no lower than the elevation of the calculated 100-year floodwater elevation.

v. Provide bank stabilization in accordance with Section 5600.

vi. Aerial crossings shall not be allowed for sewer force mains.

2. Slope and Alignment

a. Sewers shall have a uniform slope and horizontal alignment between manholes.

b. The grade lines shown on the profile drawings shall extend from the centerline of the top manhole to the centerline of the bottom manhole.

3. Depths of Bury

a. Maximum depth of sanitary sewer shall be 15 feet.

b. Materials for sanitary sewer mains based on depths of bury, measured from finished grade to the top of the pipe, are given in the table below:

Pipe Size (in)	Depth of Bury (ft)	Pipe Material	PVC	
			SDR	ASTM
4-15	3 - 15	PVC	26	D3034
18-36	3 - 15	PVC	26	D2241

4. Trench Design

a. Minimum Cover: A minimum of 36 inches of cover shall be over the top of the pipe. This minimum cover shall be from the top of the pipe to finished grade as shown below.

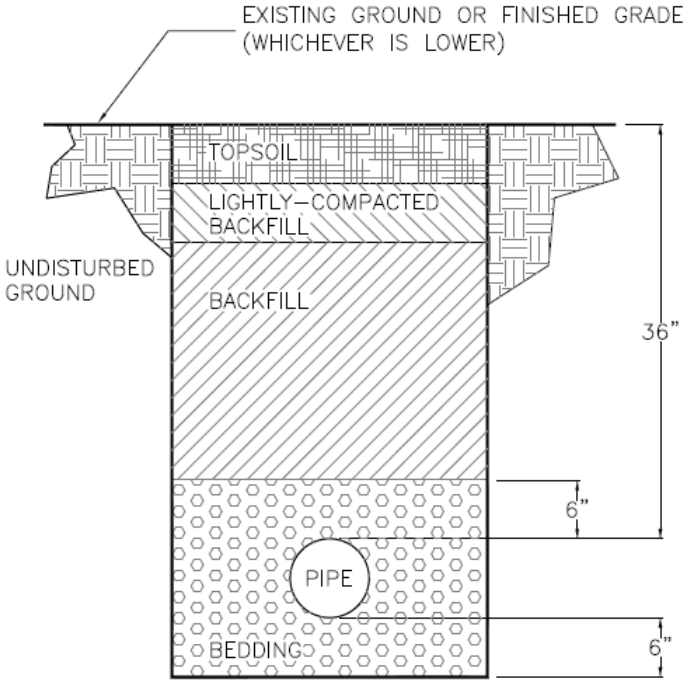

b. Bedding: Bedding aggregate shall be placed from a level 6 inches below the bottom of the pipe to a level 6 inches above the top of the pipe.

c. Backfill

i. See Paragraph 2102.2.C.2.

ii. Backfill of all pipes under roadways, curb and gutter and all other paved areas within the right of way shall consist of flowable backfill as specified in Paragraph 2602.2.H Mix Design Type A. The flowable backfill shall extend 2 feet from back of curb to 2 feet back of curb, up to 18 inches below finished grade. For existing roadways flowable backfill shall be extended to the base of pavement.

d. Trench Checks:

i. Impervious trench checks consisting of flowable backfill as specified in Paragraph 3501.H shall be placed on building sewer stubs, at least 5 feet away from the sanitary sewer main and on each side of a stream crossing.

ii. Trench checks on the building sewer stubs shall extend to the bottom of the trench. Length shall be a minimum of 12 inches. The height of the trench check shall extend 12 inches above the top of the pipe. The width of the trench check shall be the width of the trench.

iii. At drainage course/stream crossings, the trench check shall extend to the bottom of the trench. Length shall be a minimum of 2 feet and width shall be the width of the trench. The height shall extend a minimum of 12 inches above the top of the pipe.

5. Dead End Sewer Mains: All dead end sewer mains, which may be extended in the future, shall be installed to the limits of the platted subdivision such that extensions to the mains to serve adjacent subdivision plats may be connected at the plat boundary. A manhole shall be installed at the plat boundary. Any future pipe connections shall be core-drilled.

6. Pipe Collars: Pipe collars may be used where standard gasketed manhole connections are not possible.

7. Pipe Anchors

a. A minimum number of pipe anchors shall be provided in accordance with the following table. Conditions may require additional anchors as determined by the Design Engineer.

Percent of Grade	**Center to Center Max. Spacing (ft)**
20 ≤ Slope < 35	36
35 ≤ Slope <50	24
50 ≤ Slope	16

b. The pipe anchor shall extend not less than 1 foot into undisturbed earth on the sides and bottom and 1 foot above top of pipe. In incompressible material, the above

dimensions may be 6 inches each side and bottom. The anchor shall support a joint fitting.

F. Building Sewer Stubs

1. General

a. The building sewer stub extends from the sewer main to the R/W line and shall extend at least 10 feet from the sewer main, as shown below. The building sewer extends from the building to the building sewer stub. Each individual resident or business unit shall be responsible for the ownership and maintenance of the building sewer stub and building sewer.

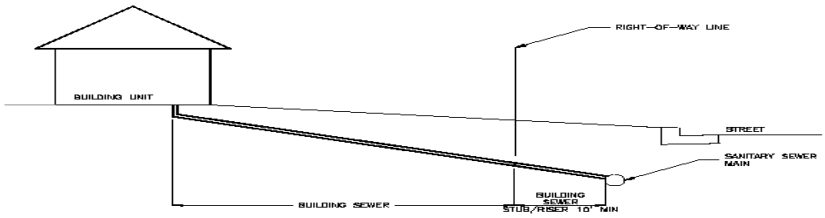

b. Building sewer stubs shall not be installed in pipe sizes 18 inches in diameter or larger.

c. Minimum diameter of building sewer stubs and building sewers shall be 4 inches.

d. Individual gravity building sewer stubs shall not connect directly into manholes.

e. Saddles shall not be permitted to connect building sewer stubs to existing sanitary sewer mains.

f. All building sewer stubs shall be SDR 26 (minimum) PVC.

g. Each individually owned residential or business unit, with the exception of apartments or condominium style properties (where the building sewer stub is in common ground and access is maintained by the property owners' association), shall have a separate building sewer stub. The number of connections shall comply with the City's Code of Ordinances, Section 32-246, Paragraph B.

h. Routing of building sewers shall be as direct as possible to the sewer main.

i. All building sewer stubs shall be shown with proposed stationing on the engineering plans.

j. Individual building sewer stubs shall not be allowed to connect into the public sanitary sewer main if the property of service is not within the corporate limits of the City of Lee's Summit.

2. Wyes for 8- to 15-inch Diameter Pipe: A wye shall be used to connect the building sewer stub to the sanitary sewer main. The wye shall be cut in.

3. Location: Wyes shall be located at least 4 feet from manholes and 4 feet from other wyes.

4. Slope: Building sewer stubs shall be installed in accordance with the current Plumbing Code adopted by the City.

5. In Right-of-Way: Building sewer stubs shall be installed by the Developer. New sewer stubs under streets shall be installed prior to construction of the street.

6. Tracer wire shall be installed along the top of service stubs. The wire shall have HDPE insulation, be no smaller than 12 gauge, and intended for underground applications. The tracer wire shall be green in color. Tracer wires shall terminate at the ground surface inside a tracer box. Tracer box lids shall be green in color. Tracer wire shall be grounded to a minimum one pound magnesium anode at the sewer line.

G. Casing Pipe

1. Casing pipe is required on all bores except building sewer stubs.

2. Pipe Supports:

a. Casing Spacers: Stainless steel casing spacers may be used.

b. Wood Skids: Wood skids are permitted. Annular space between the casing pipe and the carrier pipe shall be filled with sand.

c. Casing Pipe Plugs: The ends of the casing pipe shall be plugged as indicated in Paragraph 3501.N.3.

3. Extent: The extent of the casing pipe shall be as shown below. Consideration shall be given for future road widening.

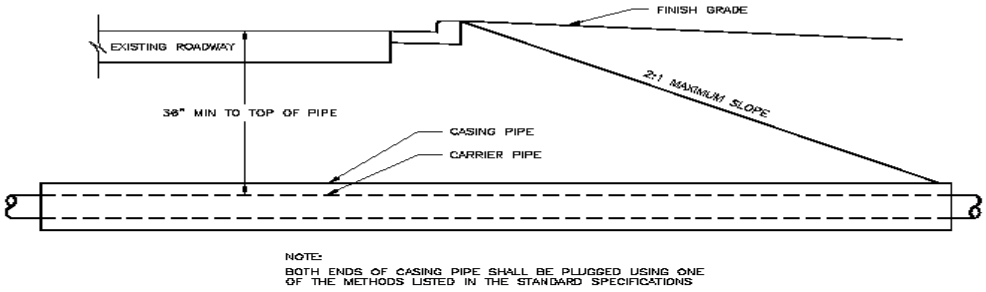

H. Manholes

1. Location

   a. Manholes for access to sewers shall be provided at all intersections with other sanitary sewers, at all points of change in horizontal alignment, at all changes in vertical grade, at all changes in pipe size or material, and at the terminus of the sewer main.

   b. Manholes shall be provided at intervals not exceeding 500 feet on all sewers.

   c. Manholes located in the street R/W should not be under the paved area.

2. Design: Manholes shall be designed and constructed to conform to ASTM C 478 and as shown in the Standard Drawings.

3. Minimum Diameter:

   a. The minimum diameter of the manhole shall be based on sewer diameter and angle of incoming pipes as follows:

Sewer Diameter (in)	**Minimum Manhole Diameter (ft)**
< 24	4
≥24	5

Minimum angle between pipes of same diameter and invert into manholes shall be angles equal to or greater than indicated below. Cores shall be made leaving a minimum of 6" between cores.

	8 Dia. Pipe 12 Dia. Opn. (in) Degrees	10 Dia. Pipe 12 Dia Pipe 15 Dia Opn. (in) Degrees	15 Dia. Pipe 16 Dia. Pipe 20 Dia. Opn. (in) Degrees	18 Dia. Pipe 21 Dia. Pipe 24 Dia. Opn. (in) Degrees	24 Dia. Pipe 28 Dia. Opn. (in) Degrees
4-Foot Dia MH	42	54	65	75	N/A
5-Foot Dia MH	36	42	52	60	68
6-Foot Dia MH	28	36	42	48	56

4. 5' and 6' manholes shall extend to the ground surface with the following options:

    i. A flat lid with cast-in-place manhole ring and cover.

    ii. An eccentric reducer may be used directly below an eccentric cone section. Flat top reducer shall not be allowed.

5. Wall Thickness: A wall thickness not less than one-twelfth of the inside diameter, or 4 inches, whichever is greater, shall be used.

6. Drop Manhole: At manholes where the invert of the inlet sewer is more than 24 inches higher than the invert of the outlet sewer, an outside drop connection shall be provided as shown in the Standard Drawings. Inside drop manholes shall not be allowed.

7. Flat Top Manhole: Any flat top manhole shall be equipped with a cast-in-place manhole ring and cover.

8. Floodwater Elevation: Unless improvements such as street grades will not permit, tops of manholes shall extend a minimum 1'-0" above the calculated 100-year floodwater elevation, provided that such extension shall not exceed 4 feet above final finish grade. Where this requirement results in an exposed manhole more than 4 feet above final finish grade, the manhole shall be equipped with watertight ring and bolt-down cover assembly with neoprene gaskets.

9. Tying a Sewer Main to an Existing Manhole:

    a. The existing manhole wall shall be core drilled.

    b. A flexible pipe-to-manhole connector shall be installed as shown in the Standard Drawings.

    c. On the engineering plans, any existing City manhole should be labeled with the City's manhole number, which can be obtained from the City's sanitary sewer base maps in the Public Works Engineering office. All other manholes shall be labeled as either LBVSD or MBCSD.

10. Adding a Manhole onto an Existing Sewer Main:

    a. The design shall provide that the Contractor cut the existing sewer main, set a pre-cast base onto a 6-inch thick (minimum) crushed rock bedding layer, and insert a sewer pipe through the manhole to connect the existing ends of the sewer main. Both ends shall be connected to the existing sewer with a rigid coupling. The inverts will be poured before the top half of the sewer pipe is cut away. Alternatively, precast inverts may be used for this application. A pumped bypass operation may be used for this application from the existing upstream manhole to the existing downstream manhole.

    b. The use of doghouse manholes shall not be allowed.

    c. On the engineering plans, any existing manhole should be labeled with the City's manhole number. This number can be obtained from the City's sanitary sewer base maps in the Public Works Engineering office.

11. Tying a sewer main to an existing LBVSD or MBCSD manhole, the following shall be completed:

    a. The pipe installation shall be in accordance with the LBVSD Interceptor Connection Manual.

    b. Application for connection shall be made by the City on behalf of the developer prior to connection.

    c. The connection fee shall be paid by the developer to the City of Lee's Summit.

    d. The pipe material connection to the LBVSD or MBCSD manhole shall be ductile iron pipe Class 50.

    e. The developer's contractor shall notify LBVSD of the actual connection construction schedule.

12. Force Main Connections.

    a. New Manhole: An epoxy manhole liner shall be used in the first two new receiving (downstream) manhole interiors to protect the structure from corrosive effects of septic waste.

    b. Existing Manholes: The use of a flexible epoxy manhole liner shall be used in the first two existing receiving (downstream) manhole interiors to protect the structure from corrosive effects of septic waste.

I. Pump Stations

1. The use of Pump stations shall not be allowed, except where indicated in the current Wastewater Master Plan.

2. When Pump stations are indicated in the Wastewater Master Plan, the design shall meet the following minimum requirements:

    a. All equipment supplied shall comply with the City's Wastewater Pump Station Facilities Design Criteria (separate document).

    b. Peak flow rates shall be calculated in accordance with the current design criteria found in Paragraph 6501.C, and shall be based on the entire watershed at ultimate growth in accordance with the City's currently adopted Wastewater Master Plan.

    c. Peak flows shall be handled by pumps or a combination of pumps and an excess flow holding basin (EFHB).

    d. Pumps shall be able to meet required flows with one pump unit out of service.

    e. EFHBs shall be sized in accordance with the Paragraph 6501.K.

    f. The odor control system (e.g., a biofilter) shall be located such that the pumping facility minimizes impact on future development.

    g. Portable pump connection shall accommodate existing City-owned equipment.

    h. Fencing shall be at least six feet high.

    i. Adequate space shall be provided within the fenced enclosure to allow access to all areas for maintenance and repair activities.

    j. A minimum of a twelve-foot wide all-weather access road, capable of accommodating the City's maintenance equipment shall be provided.

    k. Exterior mounted control panels shall be provided with a work area protected from the elements.

J. Low-Pressure Sewer Systems

1. Public low-pressure sewer systems shall not be allowed.

2. When private low-pressure sewer systems are used, the design of the system shall comply with the City's Wastewater Low-Pressure Sewer System Facilities Design Criteria (separate document).

K. Excess Flow Holding Basins (EFHB)

1. Excess flow holding basins shall not be allowed, except where indicated in the current Wastewater Master Plan.

2. When EFHB are used, the design shall meet the following minimum requirements:

a. Peak flow rates shall be calculated in accordance with the current design criteria found in Paragraph 6501.C, and shall be based with the City's currently adopted Wastewater Master Plan.

b. All equipment supplied shall comply with the City's Wastewater EFHB Facilities Design Criteria (separate document).

L. Easements

1. Unified Development Ordinance (UDO): Easements shall be provided in accordance with the requirements of the City's UDO, Article 16. In addition, the following guidelines shall be followed:

   a. Easements shall be a minimum of 10 feet wide when adjacent to the R/W.

   b. Easements shall be a minimum of 15 feet wide when detached from the R/W (i.e. between buildings or across undeveloped areas).

   c. For installations greater than 7 feet deep, easements shall be a minimum of 2 feet wide for every foot of trench depth. For sewer mains not centered within the easement, the distance from the centerline of the pipe to the edge of the easement shall be at least equal to the depth of the pipe.

   d. Easements shall be a minimum of 15 feet wide around the bulb of the cul-de-sac adjacent to the right-of-way.

2. Temporary construction easements shall be acquired as necessary to complete the installation of the project.

3. Legal Descriptions: Legal descriptions shall include drawings indicating the point of commencement, the point of beginning, line bearings, line distances, the ending point, and the area described. The drawings shall be on letter size paper. Legal descriptions and drawings shall be sealed by a Land Surveyor registered in the State of Missouri and meet the filing requirements of Jackson and/or Cass County. All documentation shall be formatted to meet the requirements of the County Recorder. Aerial photographs shall not be used in the background of the drawing.

4. Sewer Mains Extending beyond Platted Areas: In the event that a sewer main needs to extend beyond the platted area of a development, proposed easements shall be provided for the main(s) prior to receiving approval of the Engineering Plans.

Wastewater Design Flow Curve
1 - 750 Acres

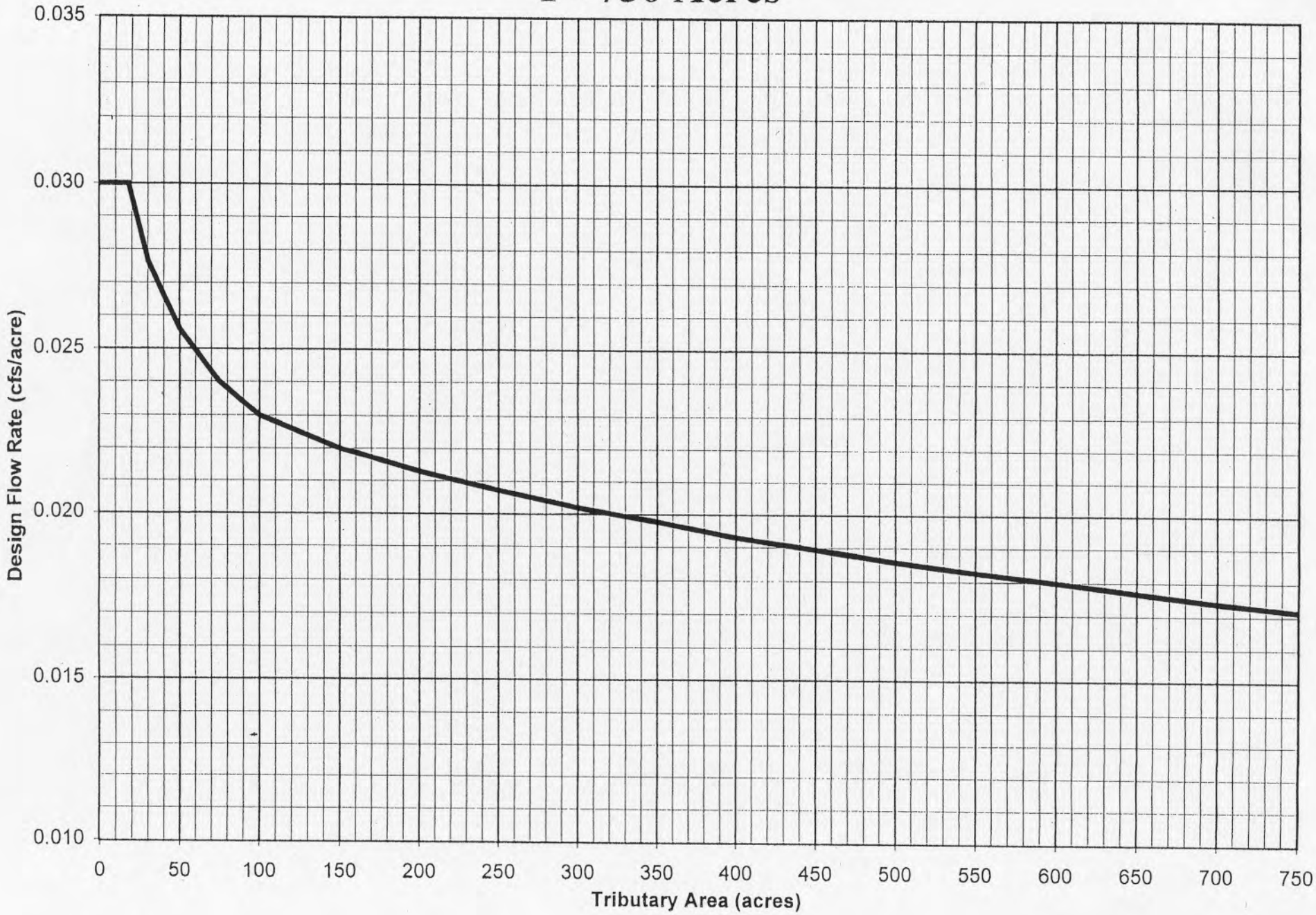

Lee's Summit, Missouri

Figure 6501-1

5/4/99

Wastewater Design Flow Curve
1 - 3000 Acres

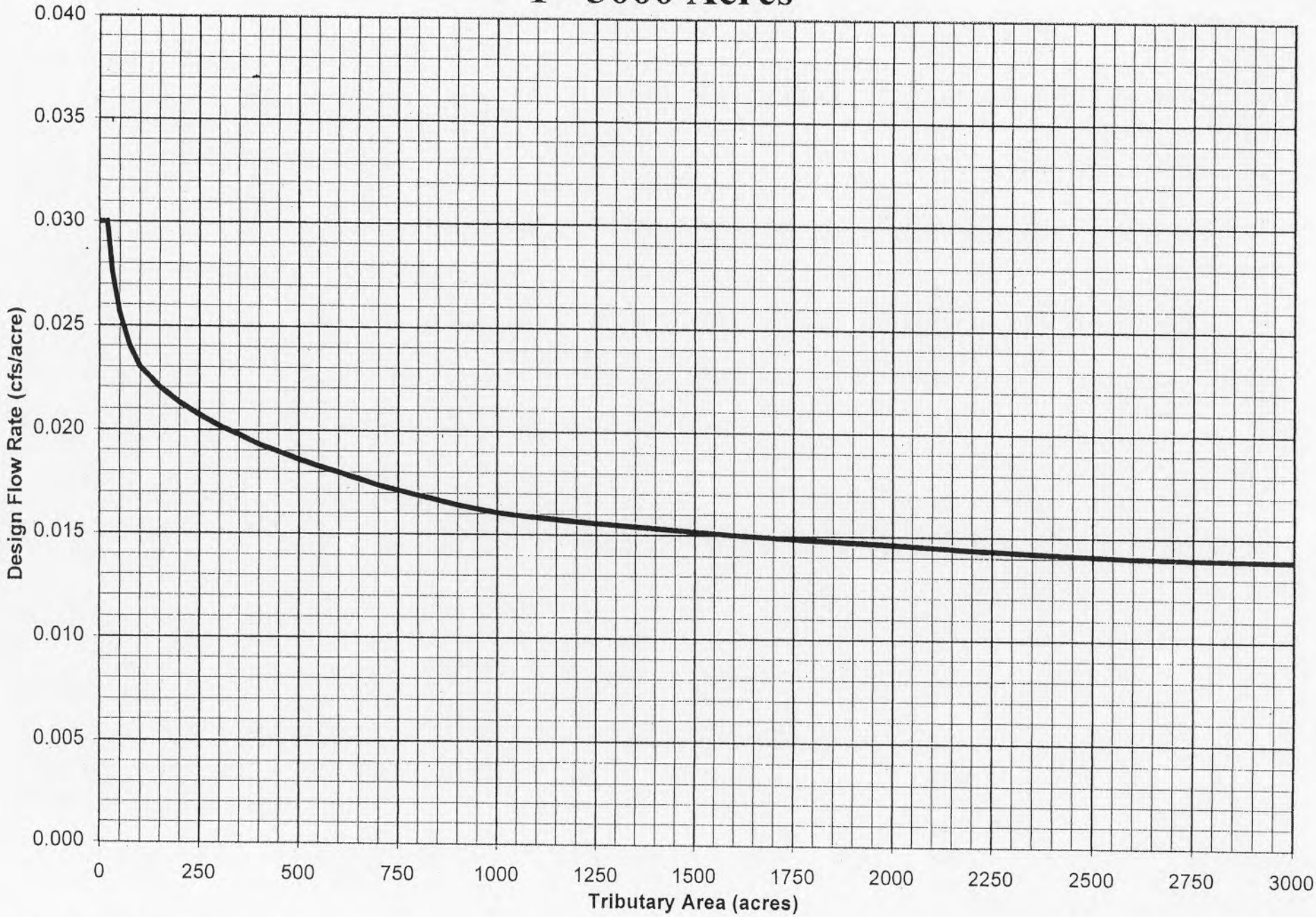

Figure 6501-2

5/4/99

INFILTRATION / INFLOW
(Commercial Areas less than 100 acres)

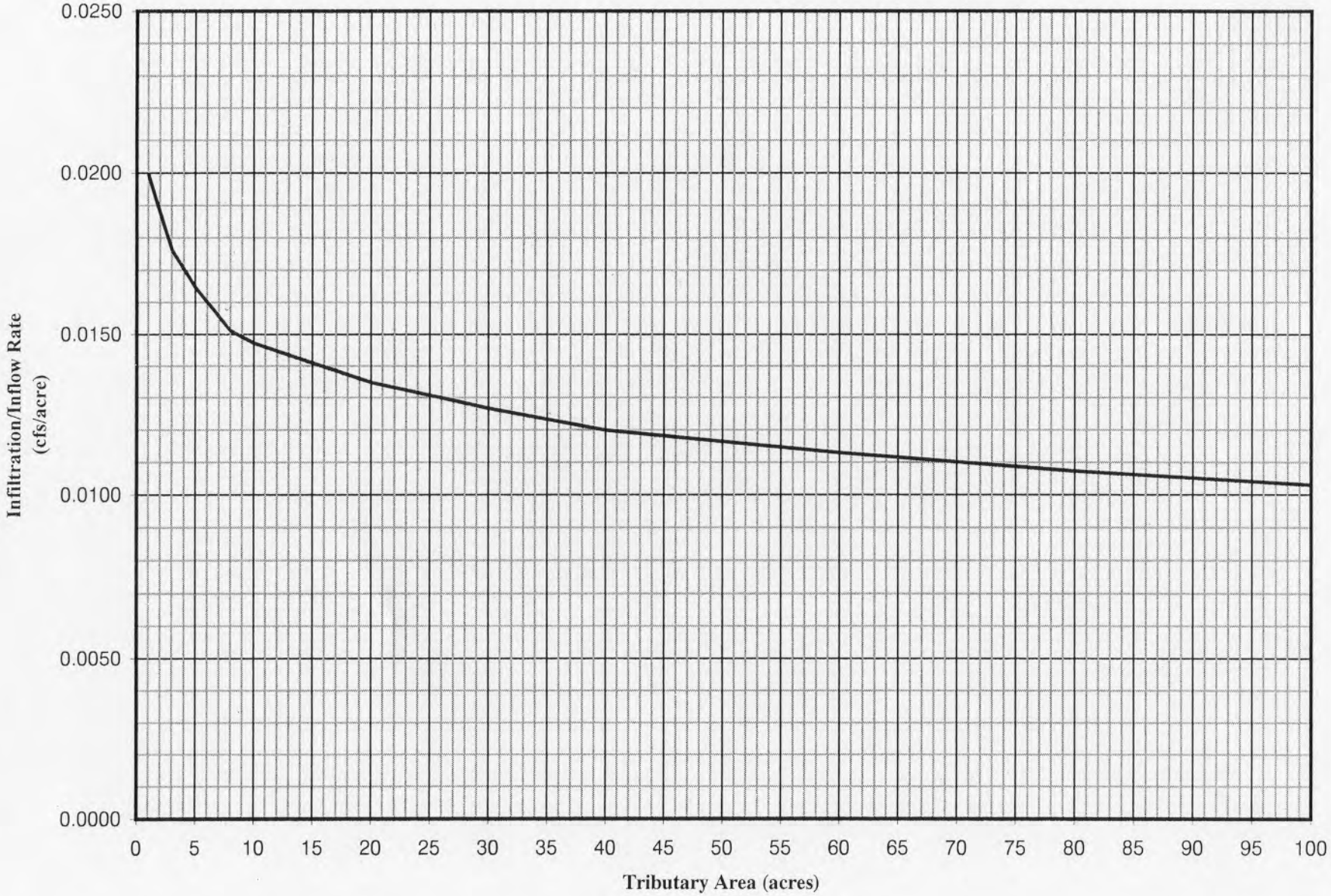

Note: The curve shown above does not include peak dry weather flow.
Peak dry weather flow must be added to obtain the PWWF.

Figure 6501-3

Table 6501-1. Equivalent Development Units

Source	EDU		Parameter
Institutional			
Hospital (not including ancillary services, i.e., cafeterias)	0.8	per	bed
Nursing Home	0.4	per	unit
Prison/Jail	0.4	per	inmate
Retirement Home	0.4	per	unit
Schools:			
Elementary	0.8	per	1000 ft^2
Middle and High	1.0	per	1000 ft^2
Commercial/Retail			
Office–General	0.3	per	1000 ft^2
Retail Stores	0.2	per	1000 ft^2
Warehouse (minimum 70% warehouse)	0.1	per	1000 ft^2
Shopping Centers and Stores	0.2	per	1000 ft^2
Restaurants:			
Drive-In	0.1	per	parking space
Fast Food (disposable patron wares)	1.6	per	1000 ft^2
Full Service	3.5	per	1000 ft^2
Animal Clinics	1.0	per	1000 ft^2
Auditoriums	0.6	per	1000 ft^2
Automobile Dealerships:			
Office Rate + Service Bays	office rate + 0.1 per service bay		
Automobile Service:			
Fast Service	0.5	per	service bay
Major Service	0.1	per	service bay
Bars and Cocktail Lounges	2.4	per	1000 ft^2
Banquet Rooms–food catered	0.5	per	1000 ft^2
Banquet Rooms–food prepared	1.1	per	1000 ft^2
Beauty Shop/Barber Shop	0.4	per	1000 ft^2
Body Shop	0.1	per	1000 ft^2
Bowling Alleys	0.4	per	lane
Car Wash:			
self-service	3.0	per	stall
automatic at service station	6.0	per	stall
tunnel, car pulled through	requires equipment specs, minimum 33		
Churches	0.5	per	1000 ft^2
Daycare/Nursery Schools	1.0	per	1000 ft^2
Dry Cleaners	0.3	per	1000 ft^2
Clubhouse (apartment)	1.0		
County Club			
private with golf course	3.0 + 2.2/1000 ft^2		
private without golf course	2.2	per	1000 ft^2
Exercise Area			
gym without showers	0.5	per	1000 ft^2
gym with showers	1.4	per	1000 ft^2
Fire Station	by water use		

Table 6501-1. Equivalent Development Units (continued)

Source	EDU		Parameter
Game Room/Arcade	0.8	per	1000 ft^2
Golf Course	3.0		
Greenhouse (area open to public)	0.2	per	1000 ft^2
Group Home	0.4	per	bed
Handball and Racquetball Courts	2.0	per	court
Hotel/Motel	0.3	per	room
Laundromat/Commercial Laundry	0.6/washer or 8.0/1000 ft^2		
Library (excluding book/file storage)	0.4	per	1000 ft^2
Locker Rooms	0.1	per	locker
Medical Offices/Outpatient Clinics	0.4	per	1000 ft^2
Meeting/Conference Rooms	0.6	per	1000 ft^2
Museum	0.4	per	1000 ft^2
Rifle/Handgun Ranges	0.2	per	lane
Roller Rink	1.2	per	1000 ft^2
Schools–Technical Vocational Institute, Junior College	0.9	per	1000 ft^2
Gas Station:			
with convenience center and without service bays	1.0 + 0.3/1000 ft^2		
without convenience center and without service bays	1.0		
Service Station:			
with 2 service bays	2.0		
with 2 service bays and car wash	8.0		
with 2 service bays and convenience center	2.0 + 0.3/1000 ft^2		
with 2 service bays, convenience center, and car wash	8.0 + 0.3/1000 ft^2		
Swimming Pools–public (private no charge)	1.1	per	1000 ft^2
Stadium/Arena	1.0/110 seats or 1.0/165 LF of bleachers		
Tanning Rooms/Centers	0.3	per	1000 ft^2
Tennis Courts–with shower facilities	2.0	per	court
Theater	1.2	per	1000 ft^2
Vacant Land	3.0	per	acre
Vehicle Garage	0.2	per	1000 ft^2
Yard Storage Buildings (excluding lumber storage)			
customer pick-up, no permanent employees	0.1	per	1000 ft^2
Industry	varies–industry specific		

Table 6501-2. Multi-Story Sources

Schools: Elementary Middle and High
Offices
Retail Stores
Warehouse
Shopping Centers and Stores
Restaurants: Fast Food Full Service
Animal Clinics
Bars and Cocktail Lounges
Banquet Rooms
Beauty Shop/Barber Shop
Churches
Daycare/Nursery Schools
County Clubs
Exercise Area/Gym
Fire Station
Game Room
Greenhouse (area open to public)
Library
Medical Offices/Clinics
Meeting/Conference Rooms
Museum
Schools–Technical Vocational Institute, Junior College
Tanning Rooms/Centers
Theaters
Vehicle Garage
Yard Storage Buildings

CITY OF LEE'S SUMMIT, MISSOURI
PRAIRIE LEE LAKE
LOW PRESSURE SEWER SYSTEM

IMPROVEMENTS ON PRIVATE PROPERTY:

DESIGN AND CONSTRUCTION MANUAL

JANUARY 2010

Table of Contents

SECTION 1 **SCOPE** **1-1**

SECTION 2 **PROCEDURES** **2-1**

SECTION 3 **DESIGN CRITERIA** **3-1**

3.1 GRINDER PUMP STATION LOCATION 3-1

3.2 CONTROL PANEL LOCATION 3-1

3.3 ELECTRICAL WIRING FOR CONTROL PANEL 3-1

3.4 1-¼-INCH DISCHARGE LINE 3-2

3.5 4-INCH SERVICE LINE 3-2

3.6 SEPTIC TANK CLOSURE 3-2

SECTION 4 **SUBMITTALS** **4-1**

SECTION 5 **INSPECTIONS** **5-1**

SECTION 6 **SPECIFICATIONS** **6-1**

SECTION 7 **DETAILS** **7-1**

SECTION 8 **APPROVED CONTRACTORS** **8-1**

SECTION 9 **SAMPLE PACKET SUBMITTAL** **9-1**

Section 1 SCOPE

This manual outlines procedures that must be followed by property owners and contractors in installing low pressure sewer improvements on their property within the Prairie Lee Lake Community Improvement District (CID).

There are two residential areas located on the north and south sides of Prairie Lee Lake within the CID boundaries. The CID boundary is shown in Figure 1-1.

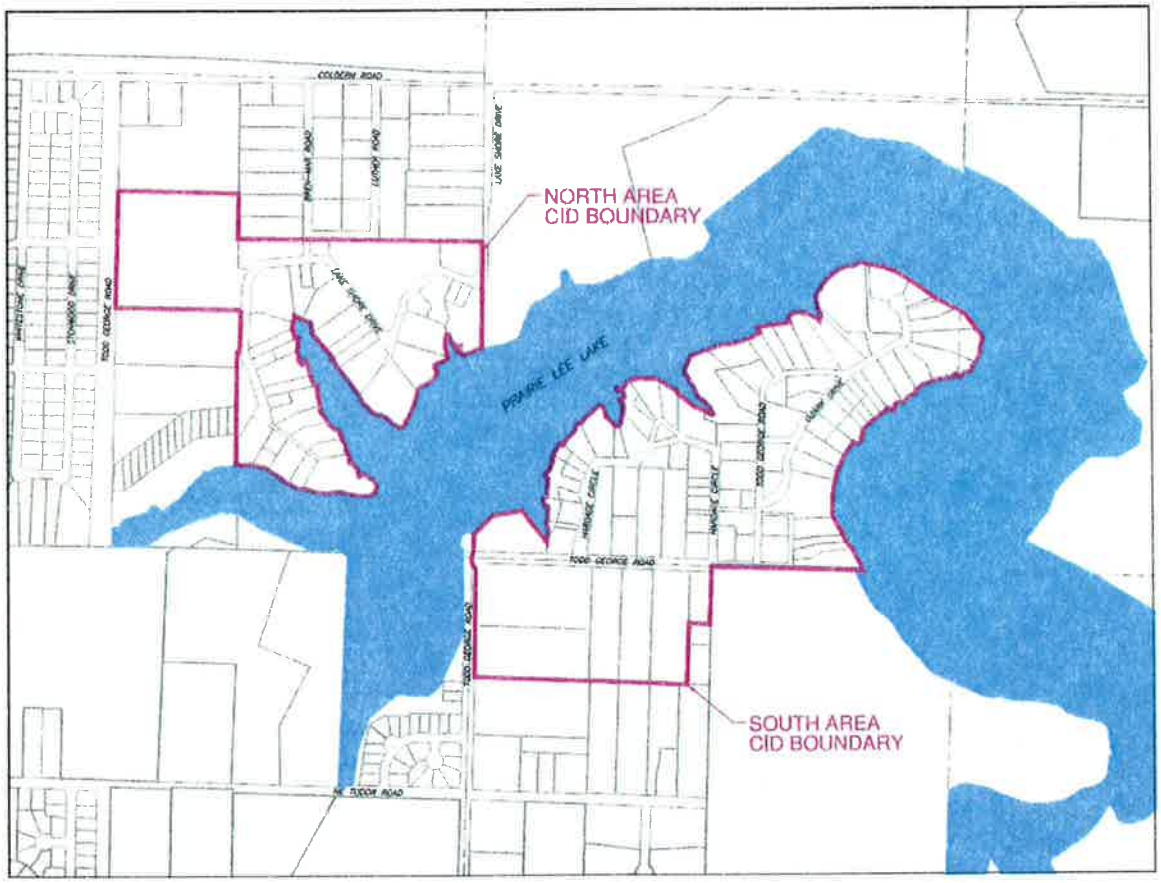

Figure 1-1 – CID Boundary

The area within the CID boundary is served by a low pressure sewer system. A low pressure sewer system is a collection of small diameter pressure mains that pump flow into the gravity sewer lines. The flow is pumped by grinder pumps, located at each home, which pump the flow through discharge mains into the low pressure sewer mains.

The low pressure sewer mains have been constructed and are ready to take flow from each home to the gravity sewer lines. The low pressure sewer mains contain components such as isolation valves, air release valve assemblies, and combination air valve assemblies. The isolation valves give the ability to shut off portions of the system for maintenance purposes. The air release and combination air valve assemblies release built up air within the system, and add additional air to the system when required. The low pressure sewer system also contains odor control stations which inject chemicals into the system to prevent and eliminate odors created by retention of sewage within the system. Each lot within the CID boundary contains a discharge line stub-out.

The discharge line stub-out will need to be connected at the property line in order to serve a lot. Figure 1-2 shows the low pressure sewer main layout within the CID boundary.

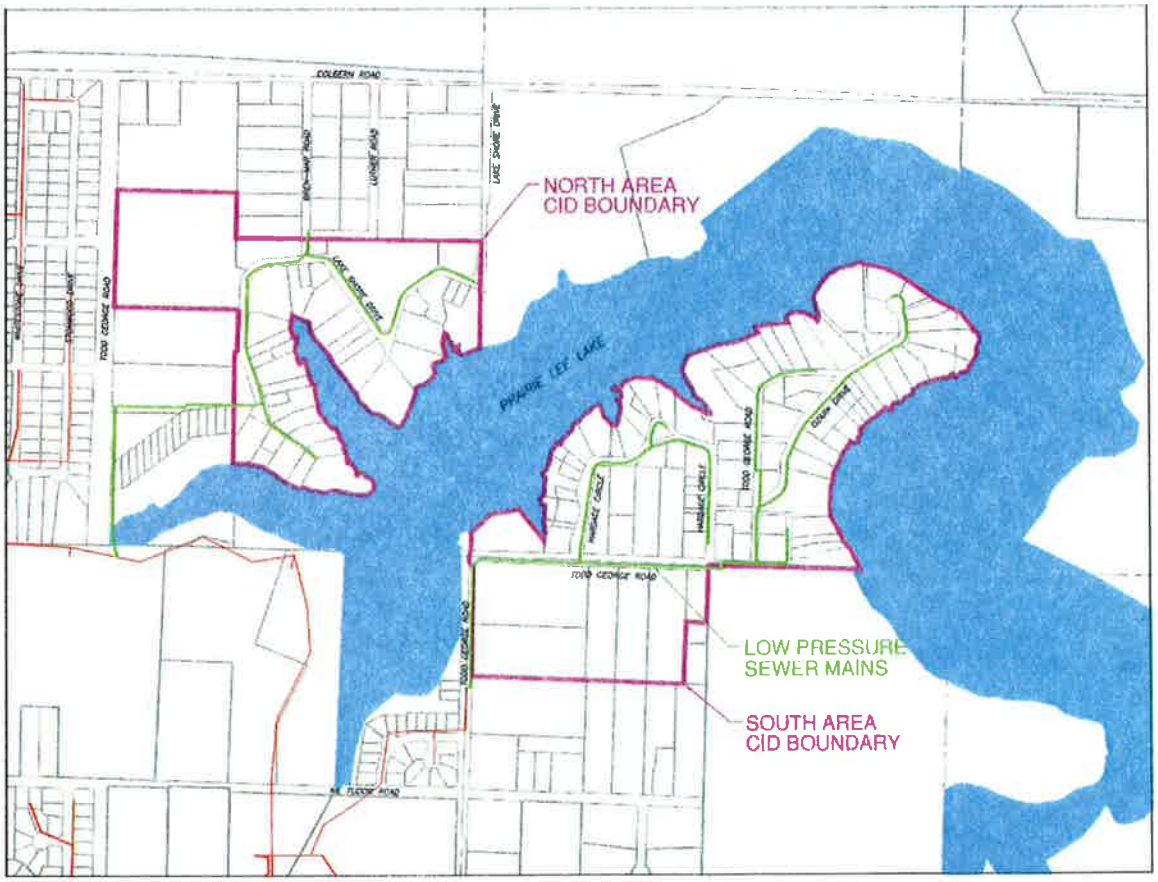

Figure 1-2 – Low Pressure Sewer Main Layout

The components that need to be constructed on each property, in order to connect into the low pressure sewer system include a grinder pump, the service line from the existing service line to the grinder pump, the discharge line from the grinder pump to the low pressure sewer main, valving on the discharge line, and the control panel and electrical connection for the grinder pump. Figure 1-3 shows all of the components required for each property.

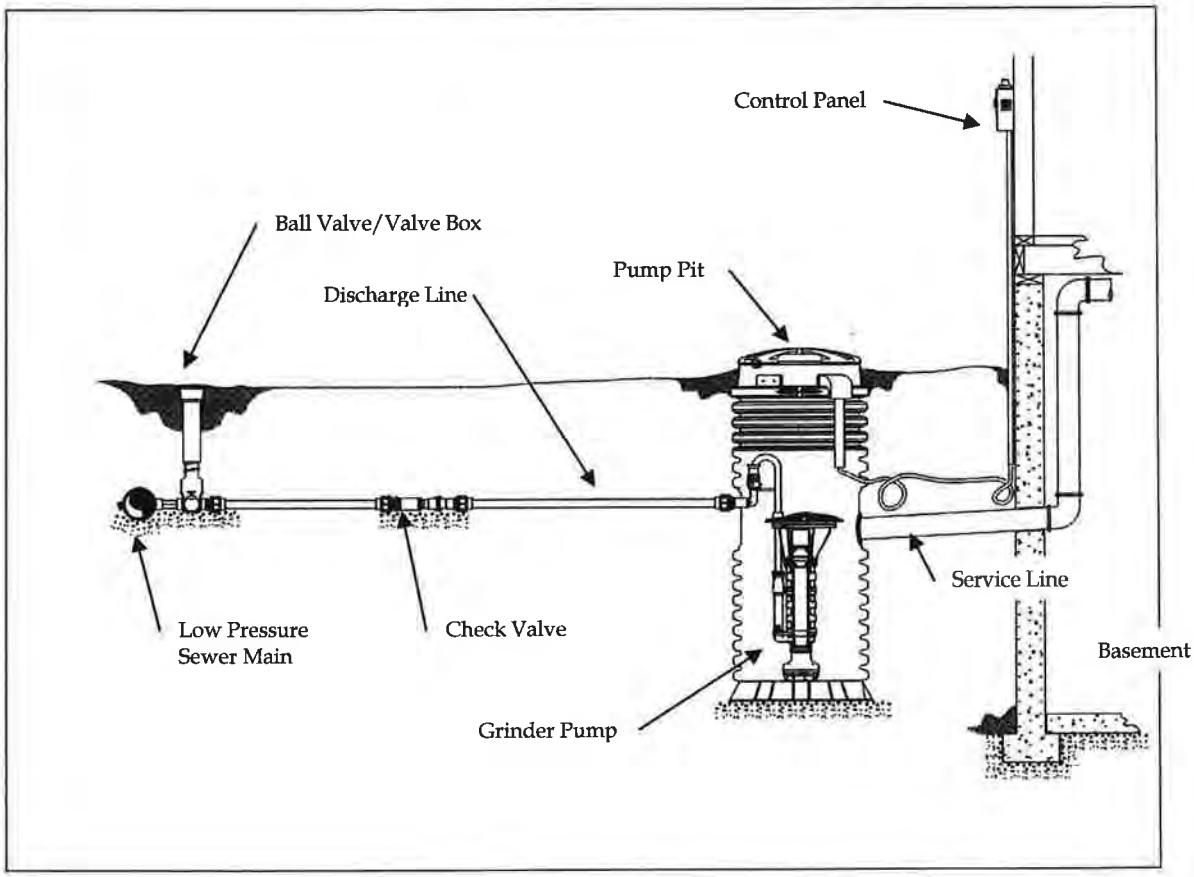

Figure 1-3 – Private Property Components

This manual will describe the procedures and design criteria that must be followed by each property owner and contractor in order to install all of the components required on each property and connect into the low pressure sewer system.

Section 2 PROCEDURES

The following outlined procedures must be followed for constructing private property improvements and connection to low pressure sewer system:

1. Property owner decides to connect to the low pressure sewer system.
2. Property owner can obtain a list of licensed plumbers within the City of Lee's Summit that have expressed interest in the project.
3. Property owner chooses to contact plumbers licensed within the City of Lee's Summit and obtain bids from the contractors to perform the work necessary as outlined in this manual to connect the property to the low pressure sewer system. Property owner can chose to perform the work themselves as an exception to hiring a licensed plumber. Design and construction guidelines outlined in this manual must be followed by either the licensed plumber or the property owner, whomever the work is being performed by..
4. Property owner and/or contractor work out a plan as to where all of the private property components will be located on their property. Property owner and/or contractor should evaluate connections to the sewer system to ensure that only sanitary sewer flow is conveyed into the sewer system, and storm water flow is discharged to daylight.
5. The contractor shall prepare a site plan using the listed design criteria.
6. The contractor shall submit a site plan packet to the Codes Administration Department for approval. The site plan packet shall include the site plan, a site plan submittal form, a copy of the compliance certificate, and product data sheets on all materials that will be used on the project. The project data sheets submitted on all materials must comply with the specifications included in this manual.
7. The Codes Administration Department will review the site plan packet submitted and will fill out the site plan submittal review checklist. A copy of the site plan submittal review checklist will be returned to the contractor "approved" or with comments that will need to be addressed. If changes are required on the site plan, or re-submittals on materials, the contractor must make the necessary changes then re-submit the information for permit approval.
8. Once the contractor receives the site plan submittal review checklist with "approved" marked, and the permit obtained, the contractor may schedule the private property improvements.
9. The scheduling of the private property improvements must be coordinated by the property owner and the contractor, with respect to the availability of the City inspectors. The work must be performed at a time when the City inspectors will be available for timely inspections. Therefore the property owner does not want to schedule the work to be constructed, then find out the City cannot inspect the work for some time, therefore startup cannot occur and the property owner will not be able to use facilities within the home for an extended period. The Codes Administration Department working hours are 8:00 A.M. – 5:00 P.M. Monday through Friday except for holidays.
10. The contractor shall install the grinder pump, control panel, discharge line, and service line. The discharge line shall be connected into existing stub-out from the

main line. The ball valve on the discharge line shall remain closed until system has been inspected and approved by the City. The service line shall be installed up to the connection point into the existing service line. The service line shall not be connected into the existing service line until the system has been inspected and approved by the City. The grinder pump, the discharge line connection into the main, and the service line shall not be backfilled until the system has been inspected and approved by the City.

11. After the contractor has installed the grinder pump, control panel, discharge line, and service up to the connection into the existing service line, prior to backfilling, the contractor shall call the City for an inspection. The discharge line should be pressurized and the pressure test initiated (record the time) just prior to the City inspector arriving to perform the inspection.

12. The City will conduct the inspection. The City will fill out the private property inspection checklist. The City will verify the discharge testing. If all components are installed properly, and the discharge testing is approved, the remaining construction and testing can proceed. Any additional inspections, if required, should be coordinated with the Codes Administration Department.

13. After securing City approval, the service line may then be connected to the existing service line and all items backfilled. Startup, testing, cleanup, demolition of septic tank, and opening of the ball valve can then be completed.

14. The contractor must contact the Jackson County Public Works Department for septic tank demolition requirements. As a minimum, the septic tank must be exposed and the contents pumped out by a licensed pumping company. A receipt should be obtained from the pumping company. Once its contents are completely removed, the septic tank should be collapsed in place, buried, and then backfilled with impervious soil.

Section 3 DESIGN CRITERIA

The following design criteria shall be followed in the developing and designing of a private property improvements site plan.

3.1 GRINDER PUMP STATION LOCATION

1. Grinder pump station shall be located at least 10 feet outside of basement wall or wall footing, or such that a minimum excavation slope of 1 horizontal : 1 vertical can be maintained from top of ground to bottom of excavation, whichever is greater.
2. Maintain a minimum of 10 feet from property lines.
3. Grinder pump station shall be installed a maximum of 20 feet from the building, unless otherwise approved.
4. Grinder pump station shall be installed in close proximity to existing septic tank.
5. Grinder pump shall be one of the models listed in Section 11200 of the specifications located within this design and construction manual. Installation details shall be per manufacturer recommendations and details located within this design and construction manual.

3.2 CONTROL PANEL LOCATION

1. Control panel shall be attached to the side of the building, within site distance of the grinder pump station.
2. Control panel shall be installed so that the bottom of the panel is a minimum of 4 feet above the ground.
3. Installation shall be in accordance with the adopted codes.
4. Control panel shall include a NEMA L10-30 receptacle with weather tight cover for generator connection.
5. The control panel shall contain a 30 amp power relay which will automatically switch the pump station from the normal power source to the generator receptacle any time the receptacle is powered.
6. Control panel shall be supplied by the pump manufacturer, as defined in Section 11200 of the specifications located within this design and construction manual.

3.3 ELECTRICAL WIRING FOR CONTROL PANEL

1. Property owner will have to provide a dedicated, 20 amp, 120/240 volt circuit from the premises service panel, to power the grinder pump station.
2. This circuit shall serve no other electrical loads other than the new grinder pump station and the circuit shall be provided with overload protection rated at 20 amps.
3. The circuit conductors shall include two #12 phase conductors, a #12 neutral, and a #12 ground conductor.
4. The wiring methods shall be in accordance with the adopted codes.
5. Once the wall of the structure is penetrated the conductors shall be routed in ¾" RGS or schedule 80 PVC conduit.

6. The wiring between the control panel and the grinder pump station may be multi-conductor single sheath cable designed for direct burial. The number and size of the conductors shall be as per the pump manufacturer's recommendations. This direct buried cable shall be provided protection by being placed in PVC conduit from a point 18" below ground to the point that it connects to the control panel or enters the grinder pump station.
7. All electrical work shall be carried out by a licensed electrician.

3.4 1-¼-INCH DISCHARGE LINE

1. 1 ¼-inch discharge line shall be installed a minimum of five (5) feet from any property line.
2. Avoid installation of 1 ¼-inch discharge line under decks, patios, driveways, sidewalks, etc, if possible.
3. Discharge lines shall maintain a minimum of 42 inches of cover from existing grade to top of pipe.
4. Discharge lines shall conform to Discharge Line Installation Detail, Thrust Block Details For PVC Schedule 40 Discharge Piping Detail, and Section 18110 of the specifications located within this design and construction manual.
5. Ball valve, valve box and valve cover shall be placed on discharge line just upstream of the low pressure sewer main connection point per Discharge Line Installation With Ball Valve And Check Valve Detail located within this design and construction manual.
6. A check valve shall be installed on the discharge line upstream of the ball valve per Discharge Line Installation With Ball Valve And Check Valve Detail located within this design and construction manual.

3.5 4-INCH SERVICE LINE

1. A new service line shall tie into the existing service line and connect into the grinder pump.
2. The existing service line shall be replaced back to the foundation wall if the existing service line contains cracks, roots, broken pipe segments, or offset joints.
3. The new service line shall be installed at a 2% slope or greater from the existing service line to the grinder pump station.
4. All building service lines need to be identified, verified and put on the site plan. This includes all gray water lines such as laundry discharge lines. All service lines from the building should be tied into the grinder pump.
5. Service lines shall conform to Section 18110 of the specifications located within this design and construction manual.

3.6 SEPTIC TANK CLOSURE

1. Jackson County Public Works Department should be contacted for septic tank demolition requirements.
2. As a minimum, locate and excavate existing septic tank lid. Remove lid from existing septic tank.
3. A licensed pumping company must pump all contents from septic tank. A receipt should be obtained from the pumping company.

4. Once its contents are removed, the septic tank will be collapsed in place, buried, and backfilled with impervious soil.

Section 4 SUBMITTALS

A site plan detailing the private property improvements and product data sheets of all materials that will be used, shall be submitted, by the contractor, to the City for approval prior to construction. The site plan should show general information needed to ensure the private property improvements are designed and installed in accordance with manual requirements. All materials and items included on the site plan shall meet the standard specifications and details within this design and construction manual. The City may provide, if available, a site sheet showing the property lines and right of way lines. A mortgage survey will suffice as the site sheet to prepare the required information. Aerial information may be obtained from the City to assist in preparing site plan drawings. All the site plan requirement information may be hand drawn on the site plan. The following information shall be included on the site plan.

- City-provided Site Plan:
  - Scale (1"=30' or larger)
  - North arrow
  - property lines
  - right-of-way lines
  - building outline from aerial photo
  - driveways/sidewalks from aerial photo
- Existing information to be added by the property owner to City-provided Site Plan:
  - fences/gates that must be crossed to access grinder pump location
  - existing utilities such as gas, electric, telephone, cable, water lines, sewer lines, low pressure sewer mains, etc. (as obtained from Missouri One Call – 1-800-344-7483)
  - septic tank location
  - indicate any facilities that utilize/discharge large quantities of water to the sewer (hot tubs, pools, etc.)
  - building service line
  - grey water lines
  - Ball valve location (if already installed as part of main line construction)
- Proposed improvements to be added to City provided Site Plan, with dimensions:
  - new service line from existing service line to grinder pump
  - grinder pump station location
  - control panel location
  - electrical wiring route
  - 1 ¼" discharge line alignment
  - Ball valve (if not already installed as part of main line construction) and check valve location on 1 ¼" discharge line
  - connection point to low pressure sewer main location
- Provide the number of drains in the house, such as toilets, sinks, showers, etc. Floor drains are not included in this number.

The enclosed site plan submittal form shall be included with the site plan, copy of the compliance certificate, along with cut sheets for all materials being used, and submitted to the City for approval. The City will complete the enclosed site plan submittal review checklist and it will either be returned to the permit applicant "approved" or with comments that will need to be addressed prior to obtaining permit approval.

CITY OF LEE'S SUMMIT, MISSOURI
PRAIRIE LEE LAKE
LOW PRESSURE SEWER SYSTEM

SITE PLAN SUBMITTAL
COVER SHEET

The permit applicant shall submit two copies of this form, a site plan, and material/equipment cut sheets for review and approval.

A. Submittal Date: _____

Site Address: _____

City, Street, & Zip: _____

B. Home Owner

Name: _____

Address: _____

City, Street, & Zip: _____

Phone Number: _____

Alternate Phone Number: _____

C. Contractor or Plumber

Contact Name: _____

Company Name: _____

Address: _____

City, State & Zip: _____

Phone Number: _____

Fax Number: _____

-End-

CITY OF LEE'S SUMMIT, MISSOURI
PRAIRIE LEE LAKE
LOW PRESSURE SEWER SYSTEM

SITE PLAN SUBMITTAL REVIEW CHECKLIST

A. Submittal Date: _____

Site Address: _____

City, State & Zip: _____

B. Home Owner Name: _____

C. Contractor Name: _____

D. Two Copies of Site Plan Submittal Cover Sheet: ☐Yes ☐No

E. Two Copies of Material Cut Sheets: ☐Yes ☐No

F. Site Plan Sketch or Drawing: ☐Yes ☐No

		Comments:
1. Existing Information:		
a. scale – 1" = ___	☐Yes ☐No	_____
b. north arrow	☐Yes ☐No	_____
c. property lines	☐Yes ☐No	_____
d. right-of-way lines	☐Yes ☐No	_____
e. building footprint	☐Yes ☐No	_____
f. driveways/sidewalks	☐Yes ☐No	_____
g. fences/gates	☐Yes ☐No	_____
h. existing utilities	☐Yes ☐No	_____
gas	☐Yes ☐No	_____
water	☐Yes ☐No	_____
electric	☐Yes ☐No	_____
telephone	☐Yes ☐No	_____
cable	☐Yes ☐No	_____
sewer	☐Yes ☐No	_____
i. septic tank location	☐Yes ☐No	_____
j. building service line	☐Yes ☐No	_____
k. gray water lines identified facilities discharging large quantities of water identified	☐Yes ☐No	_____

Comments:

2. Proposed Improvements: ☐Yes ☐No _____

   a. Grinder pump station
      - Is station a minimum 10 feet from basement wall ☐Yes ☐No _____
      - Is station a minimum of 10 feet from property line ☐Yes ☐No _____
      - Is station within 20 feet of the building ☐Yes ☐No _____
      - Is station a model listed in specifications ☐Yes ☐No _____
      - Is station in close proximity to existing septic tank ☐Yes ☐No _____

   b. Control panel
      - Is panel attached to the side of the building within site distance of station ☐Yes ☐No _____
      - Is panel supplied by the pump manufacturer ☐Yes ☐No _____

   c. Electrical wiring ☐Yes ☐No _____
      - Is electrical line route shown on site plan ☐Yes ☐No _____

   d. 1 ¼" discharge line
      - Is discharge line minimum 5 feet from property line ☐Yes ☐No _____
      - Is discharge line being run under a deck, patio, driveway, or sidewalk ☐Yes ☐No _____
      - Discharge line material meet specifications ☐Yes ☐No _____
      - Ball valve/valve box/box cover are shown just upstream of low- pressure sewer main connection ☐Yes ☐No _____
      - Ball valve/valve box/box cover meet specifications ☐Yes ☐No _____
      - Check valve is shown upstream of ball valve ☐Yes ☐No _____
      - Check valve meets specifications ☐Yes ☐No _____

Comments:

e. New building service line
   - Is the new service line shown tieing into existing service line ☐Yes ☐No _____
   - Are all service lines identified and being connected into grinder pump ☐Yes ☐No _____
   - Does the material used for service line meet specifications ☐Yes ☐No _____

G. Are number of drains inside house listed ☐Yes ☐No _____

Site plan "approved" ☐Yes ☐No

Materials "approved" ☐Yes ☐No

Comments:

Reviewer: _____

Date Approved: _____

Section 5 INSPECTIONS

Inspections will be performed by the Codes Administration Department at designated points during construction phases of all private property improvements.

The contractor shall install the grinder pump station, electrical control panel, and discharge piping, discharge valving, connection into stub-out from main line, and service line from grinder pump up to the connection point into the existing service line. The discharge line shall be connected into the existing stub-out from the main line. The ball valve on the discharge line shall remain closed until system has been inspected and approved by the City. The service line shall be installed up to the connection point into the existing service line. The service line shall not be connected into the existing service line until the system has been inspected and approved by the City. The grinder pump, the discharge line connection into the main, and the service line shall not be backfilled until the system has been inspected and approved by the City.

After the contractor has installed the grinder pump, control panel, discharge line, and service up to the connection into the existing service line, prior to backfilling, the contractor shall call the City for an inspection. The discharge line testing should be started prior to the City inspection. The end of the discharge line should be plugged. The discharge line must be pressure tested for at least one hour with no loss of pressure at 1 ½ times working pressure or a minimum of 50 psi.

The City will conduct the inspection. The City will fill out the private property inspection checklist. The City will verify the discharge testing. If all components are installed properly, and the discharge testing is approved, the remaining startup testing can proceed.

Once startup testing is complete, the service line may then be connected into the existing service line and all items backfilled. Cleanup, demolition of septic tank, and opening of the ball valve can then be completed.

The contractor must contact the Jackson County Public Works Department for septic tank demolition requirements. As a minimum, the septic tank will need to be located, the lid removed, the contents pumped out by a licensed pumping company, the septic tank collapsed in place, buried, and backfilled with impervious soil. A receipt should be obtained from the pumping company.

CITY OF LEE'S SUMMIT, MISSOURI
PRAIRIE LEE LAKE
LOW PRESSURE SEWER SYSTEM

PRIVATE PROPERTY INSPECTION CHECKLIST

The contractor shall contact Codes Administration Department to schedule inspections during construction of private property improvements. The following checklist of items shall be verified by the Codes Administration Department.

Home Owner Name: _____

Site Address: _____

Phone Number: _____

			Comments
I. GRINDER PUMP STATION			
☐ Grinder pump is one listed in specifications	☐ yes	☐ no	_____
☐ Grinder pump station is installed a minimum of 10 feet outside basement wall	☐ yes	☐ no	_____
☐ Grinder pump station is installed a minimum of 10 feet from property line.	☐ yes	☐ no	_____
☐ Grinder pump station is installed a maximum of 20 feet from building	☐ yes	☐ no	_____
☐ Grinder pump station is installed in close proximity to existing septic tank	☐ yes	☐ no	_____
☐ Grinder pump has been put in place and leveled	☐ yes	☐ no	_____
☐ Concrete anchor has been placed around grinder pump	☐ yes	☐ no	_____
GRINDER PUMP STATION			☐ Approved ☐ Not Approved
II. ELECTRICAL AND CONTROL PANEL			
☐ Control panel has been placed within site distance of grinder pump station	☐ yes	☐ no	_____
☐ Control panel has been installed at least 4 feet above the ground to bottom of panel	☐ yes	☐ no	_____
☐ Control panel has been properly connected to existing lighting panel, following adopted codes	☐ yes	☐ no	_____

		Comments
☐ Control panel is equipped with a quick connect for generator	☐ yes ☐ no	_____
☐ Electrical wiring from grinder pump to control panel has been installed a minimum of 18 inches below grade	☐ yes ☐ no	_____
ELECTRICAL AND CONTROL PANEL		☐ Approved ☐ Not Approved

III. DISCHARGE LINE

☐ Discharge line material meets specifications	☐ yes ☐ no	_____
☐ Discharge line is installed a minimum of 42 inches below grade	☐ yes ☐ no	_____
☐ Ball valve/valve box/box cover installed meets specifications	☐ yes ☐ no	
☐ Ball valve/valve box/box cover have been installed upstream of connection point to low pressure sewer main	☐ yes ☐ no	_____
☐ Check valve has been installed along discharge line	☐ yes ☐ no	_____
☐ Check valve meets specifications	☐ yes ☐ no	_____
☐ Discharge line installed is a minimum of 5 feet from property line	☐ yes ☐ no	_____
DISCHARGE LINE		☐ Approved ☐ Not Approved

IV. SERVICE LINE

☐ New service line has been installed from grinder pump station to connection point into existing service line at a slope of 2% or greater	☐ yes ☐ no	_____
☐ Service line material meets specifications	☐ yes ☐ no	_____
☐ All existing service lines have been exposed	☐ yes ☐ no	_____
☐ Existing service line needs to be replaced back to foundation wall	☐ yes ☐ no	_____
NEW AND EXISTING SERVICE LINE		☐ Approved ☐ Not Approved

V. DISCHARGE LINE TESTING

☐ End of discharge line has been plugged	☐ yes ☐ no	_____
☐ Discharge line was pressure tested for at least one hour with no loss of pressure at 1 ½ times working pressure or a minimum of 50 psi	☐ yes ☐ no	_____
DISCHARGE LINE TESTING		☐ Approved ☐ Not Approved

Comments

Comments:

_____

_____

_____

_____

_____
Inspector's Name

_____
Date

_____
Inspector's Signature

Section 6 SPECIFICATIONS

All private property improvements shall meet the enclosed specifications to obtain approval from the City.

SECTION 03300

CONCRETE

PART 1 GENERAL

1.01 SUMMARY

A. Section includes:

1. Concrete for Anti-Flotation anchor around grinder pump basin.

2. Concrete anti-flotation anchor shall be sized according to the manufacturer's recommendations.

3. Concrete anti-flotation anchor shall be pre-cast to the grinder pump station, or poured in place.

4. If the concrete anti-flotation anchor is poured in place, the unit shall be leveled, and filled with water, to the bottom of the inlet, to help prevent the unit from shifting while the concrete is being poured. The concrete must be manually vibrated to ensure there are no voids.

5. Concrete shall be Fastset Concrete mix (#1004-51) as manufactured by the Quikrete Companies, or equal.

1.02 QUALITY ASSURANCE

A. Codes and Standards: Comply with provisions of the latest editions of the following codes, specifications and standards, except where more stringent requirements are shown or specified:

1. ASTM C 39: Compressive Strength of Cylindrical Concrete Specimens

2. ASTM C 191: Setting Time of Hydraulic Cement

3. ASTM C 882: Slant Shear Bond Strength

4. ASTM C928: Rapid Hardening Cementitious Materials for Concrete Repairs

PART 2 PRODUCTS

1.03 CONCRETE MATERIALS

A. Performance and Physical Properties at 73 degrees F and 50 percent relative humidity:

1. Compliance: ASTM C 928 R-3 specifications

2. Set Time, ASTM C 191: 25-45 minutes

3. Compressive Strength, ASTM C39: 3000 psi (20.7 MPa) @ 3 hours,

4. 5000 psi (34.5 MPa) @ 24 hours, 6000 psi (41.3 MPa) @ 7 days and 7000 psi (48.3 MPa) @28 days

5. Slant Shear Bond Strength, ASTM C 882: 1000 psi (6.9 MPa) @ 24 hours, 1500 psi (10.3 MPa) @ 7days

6. Shrinkage ASTM C 928: 28 days in air > - 0.15%, 28 days in water < +0.15%

7. Application thickness: 1 ½" (38 mm) to 24" (610 mm)

PART 3 EXECUTION

2.01 MIXING

A. Comply with manufacturer's printed instructions and the following:

1. Material should be mechanically mixed for a maximum of 3-4 minutes using a barrel-type concrete mixer or a standard mortar mixer.

2. Add 3 quarts (2.8L) of clean water for each 70lb (31.8 kg) bag. Add the powder to the water and mix to a stiff cohesive consistency. If more water is needed to achieve a firm workable mix, add small amounts at a time and continue to mix until the desired consistency is achieved. Do not exceed a total volume of 1 gallon (3.8 L) of water for each 70lb (31.8 kg) bag. Do not mix more material than can be placed in 15 minutes.

3. Do not re-temper with additional water.

2.02 APPLICATION

A. Consolidate the material using hand tamping and/or chopping with a shovel. Compact around the edges of the basin.

B. D. Do not apply if temperatures are below 40°F (4°C) or are expected to go below 32° (0° C) within a 24 hour period. Use cold water in hot weather or hot water in cold weather to achieve desired grout temperature.

2.03 CURING

A. No special curing is required.

END OF SECTION

SECTION 11200

PACKAGE GRINDER PUMP STATION

PART 1 GENERAL

1.01 SCOPE

A. Grinder Pump Station shall be one of the following:

1. Environment/One Company, Model DH-071 grinder pump station
2. Delta Environmental Products, DGF12 system with D1P20-21 grinder pump
3. Crane Pumps & Systems Barnes, EcoTRAN system with Omni Grind Plus pump

PART 2 PRODUCTS

2.01 GENERAL CONSTRUCTION

A. Control Panel:

Control panel supplied shall be by grinder pump station manufacturer.

Control panel shall include NEMA L10-30 receptacle with weather tight cover for generator connection.

Control panel shall contain a 30 amp power relay which will automatically switch the pump station from the normal power source to the generator receptacle any time the receptacle is powered.

PART 3 EXECUTION

3.01 INSTALLATION

A. Installation procedures shall be as recommended by the grinder pump station manufacturer, the Hydraulic Institute Standards, and as required herein.

3.02 FACTORY PERFORMANCE TESTING

A. Factory pump test results for comparable pumps shall be submitted to City.

3.03 MANUFACTURER'S INSTALLATION AND START-UP SERVICES

A. A factory-trained technician to perform installation, start-up, and field testing services can be requested by the property owner at the property owner's expense.

B. After grinder pump installation, prior to backfilling, the Contractor shall call City for an inspection. The inspection checklist located within the design and construction manual will be filled out by the City. After grinder pump installation has been approved, the grinder pump can be tested and backfilled.

3.04 WARRANTY AND GUARANTEE

A. The manufacturer shall supply a standard one (1) year warranty for the grinder pump station. Any extended warranties shall be purchased by the property owner.

END OF SECTION

SECTION 18110

PIPE AND PIPE FITTINGS

PART 1 GENERAL

1.01 SUMMARY

A. Provide all pipe and fittings required to install discharge lines and new service lines to the grinder pump stations.

1.02 REFERENCES

A. Pipe and fittings shall be designed and tested in accordance with manufacturers' recommended procedures and the following codes and applicable standards:

1. American National Standards Institute (ANSI):

A21.11	-	Rubber Gasket Joints for Cast-Iron and Ductile-Iron Pressure Pipe and Fittings.
A21.15	-	Flanged Cast-Iron and Ductile-Iron Pipe with Threaded Flanges.
A21.51	-	Ductile Iron Pipe, Centrifugally Cast, in Metal Molds or Sand-Lined Molds for Water or Other Liquids.
B16.1	-	Cast-Iron Pipe Flanges and Flanged Fittings, 25, 125, 250 and 800 Pound
B16.3	-	Malleable Iron Screwed Fittings, 150 and 300 Pound.
B16.5	-	Steel Pipe Flanges and Flanged Fittings.
B16.9	-	Factory-Made Wrought Steel Butt Welding Fittings.
B16.11	-	Forged Steel Fittings, Socket Welding and Threaded.
B16.21	-	Nonmetallic Gaskets for Pipe Flanges.
B16.22	-	Wrought Copper and Bronze Solder Joint Pressure Fittings.
B16.25	-	Butt Welding Ends.

2. American Society for Testing and Materials (ASTM):

A120	-	Black and Hot Dipped Zinc-Coated (Galvanized) Welded and Seamless Pipe for Ordinary Uses.
A182	-	Forged and Rolled Alloy Steel Pipe Flanges, Forged Fittings, and Valves and Parts for High Temperature Service.
A307	-	Carbon Steel Externally and Internally Threaded Standard Fasteners.
A536	-	Ductile Iron Castings.
A674	-	Polyethylene Encasement for Gray and Ductile Cast-Iron Pipe for water or other Liquids.
A746	-	Standard for Ductile Iron Gravity Service Pipe.
D1248	-	Polyethylene Plastic Molding and Extrusion Materials.
D1784	-	Rigid Polyvinyl Chloride Compounds and Chlorinated Polyvinyl Chloride Compounds.
D1785	-	PVC Schedule 40 Pipe
D2310	-	Machine Made Reinforced Thermosetting Resin Pipe.
D2321	-	Underground Installation of Thermoplastic Pipe for Sewers and Other Gravity Flow Applications
D2466	-	Socket Type PVC Schedule 40 Plastic Fittings

D2564 - PVC Solvent Cements
D2855 - Making Solvent Cemented Joints with PVC Pipe and Fittings
D2997 - Centrifugally Cast Reinforced Thermosetting Resin Pipe.
D3034 - Type PSM Polyvinyl Chloride (PVC) Sewer Pipe and Fittings (4" through 15").
D3035 - Polyethylene Plastic Pipe Based on Controlled Outside Diameter
F714 - Polyethylene Plastic Pipe Based on Outside Diameter

3. American Water Works Association (AWWA):

C105 - Polyethylene Encasement for Gray and Ductile Iron Piping for Water and Other Liquids.
C110 - Gray-Iron and Ductile-Iron Fittings, 3-inch through 48-inch, for Water and Other Liquids.
C111 - Rubber-Gasket Joints for Cast-Iron and Ductile-Iron Pressure Pipe and Fittings.
C115 - Flanged Cast-Iron and Ductile-Iron Pipe with Threaded Flanges.
C150 - Thickness Design of Ductile Iron Pipe.
C151 - Ductile Iron Pipe, Centrifugally Cast in Metal Molds or Sand-Lined Molds, for Water or Other Liquids.
C153 - Ductile Iron Compact Fittings.
C600 - Installation of Ductile Iron Pipe.
C900 - Polyvinyl Chloride Pressure Pipe.
C950 - Glass-Fiber-Reinforced Thermosetting-Resin Pressure Pipe.

4. American Society of Mechanical Engineers (ASME):

B31.1 - Code for Pressure Piping, Power Piping Section
ASME Boiler Code - Section 1.

5. National Bureau of Standards, Voluntary Products Standard (NBS):

PS15-69 - Custom Contact-Molded Reinforced-Polyester Chemical-Resistant Process Equipment.

1.03 COMPLIANCE SUBMITTALS

A. Submit cut sheets on discharge piping and service line piping to City for approval.

B. Submit cut sheets on all fittings and accessories required for discharge piping and service line piping to City for approval.

1.04 JOB CONDITIONS

A. Discharge lines shall be installed a minimum of 42 inches below grade.

B. Service lines shall be installed at a 2% slope or greater from the building to the grinder pump station.

PART 2 PRODUCTS

2.01 ACCEPTABLE MANUFACTURER

A. PVC Schedule 40 Discharge Piping:

1. JM Eagle, Inc.

2. Northern Pipe Products.

3. Or approved equal.

B. HDPE Discharge Piping:

1. JM Eagle, Inc.

2. Oxford Plastics, Inc.

3. ISCO Industries

4. Or approved equal

C. Gravity Service Line Piping:

1. Certainteed Corporation.

2. Northern Pipe Products

3. Or approved equal.

2.02 MATERIALS

A. Discharge Line Piping and Fittings:

Discharge line can be either PVC Schedule 40 pipe or HDPE pipe.

1. PVC Schedule 40

a. All PVC Schedule 40 pipe shall be manufactured from a Type I, Grade I polyvinyl Chloride (PVC). The pipe shall be manufactured in strict compliance to ASTM D1785 and D2665, consistently meeting and/or exceeding the quality assurance test requirements of these standards with regard to material, workmanship, burst pressure, flattening, and extrusion quality.

b. All plastic pipe shall be approved by and bear the National Sanitation Foundation seal of approval and will comply with the requirements for Class 12454-A or Class 12454-B virgin components as defined in ASTM D1784 with an estimated hydrostatic design basis (HDB) rating of 4000 psi (27.58 MPa) for liquid at 73.4°F (23°C).

c. All fittings shall be socketed type, manufactured in accordance with ASTM 2466.

d. PVC pipe and socketed fittings shall be joined by cold welding through the use of solvent-based cements manufactured in accordance with the pipe manufacturer's recommendations and generally inconformity with the recommended practice for making solvent-cemented joints described in ASTM D2855.

e. Fittings for Pipe.

f. Fittings shall conform to ASTM D1785 and ASTM D2466 and be of the same (or higher) pressure rating as the pipe line.

g. Thrust blocks shall be used on all Schedule 40 fittings. Thrust shall be per detail.

2. HDPE

a. General: Furnish maximum pipe lengths normally produced by the manufacturer, except for fittings, closures, and specials. Only solid wall HDPE pipe in accordance with ASTM F714 shall be used. HDPE profile wall pipe and fittings shall not be used.

b. Materials: The pipe shall be high performance, high molecular weight, high density polyethylene pipe, Driscoplex 4200 by CP Chem Performance Pipe, a division of Chevron Phillips Chemical Company, Plano, Texas, and shall conform to ASTM D1248 (Type III, Class C, Category 5, P34). Minimum cell classification shall be 345434 C as referenced in ASTM D 3350-84.

c. Design: Pipe supplied under this specification shall have a nominal IPS (Iron Pipe Size) OD. The SDR (Standard Dimension Ratio) of the pipe shall be SDR 11, 160 psi.

d. Joints: Low pressure flow systems shall be joined by use of the heat fusion technique of butt fusion resulting in a monolithic pipe. All joints shall be fully restrained and as strong as the pipe in both tension and hydrostatic loading. The joining of pipes of dissimilar materials shall be made using approved transition coupling, and shall provide a permanent and watertight connection which will withstand the hydrostatic test pressure.

e. Fittings: The fittings for low pressure systems shall be molded from a polyethylene compound having a cell classification equal to or exceeding the compound used in the pipe or shall be manufactured using a polyethylene compound having a cell classification equal to or exceeding the compound used in the pipe supplied under this specification. All fittings supplied under this specification shall be of the same manufacturer as the pipe being supplied. Minimum cell classification shall be 345434 C as referenced in ASTM D3350-84.

B. Polyvinyl Chloride (PVC) Gravity Service Line Pipe and Fittings:

1. PVC sewer service line pipe and fittings, 4-inch in size, shall conform to ASTM D-3034, SDR 35.

2. All PVC sewer service line pipe and fittings shall be made of PVC plastic having a cell classification of 12454-B or 12454-C, as defined by ASTM D1784.

3. Molded fittings shall be supplied with factory-installed gaskets and shall be suitable for use with SDR-35 gravity sewer pipe. Fittings shall not deflect more than pipe when loaded and bedded in the same manner.

4. All 90° bends shall be accomplished by using two 45° bends.

PART 3 EXECUTION

3.01 INSTALLATION

A. Install pipe in accordance with Section 18160.

3.02 APPROVAL

A. The Contractor shall install the grinder pump, control panel, discharge line, and service line. The discharge line shall be connected into the existing stub-out from the main line. The ball valve on the discharge line shall remain closed until system has been inspected and approved by the City. The service line shall be installed up to the connection point into the existing service line. The service line shall not be connected into the existing service line until the system has been inspected and approved by the City. The grinder pump, the discharge line connection into the main, and the service line shall not be backfilled until the system has been inspected and approved by the City.

B. After the Contractor has installed the grinder pump, control panel, discharge line, and service up to the connection into the existing service line, prior to backfilling, the Contractor shall call the City for an inspection.

C. The City will conduct an inspection. The City will fill out the private property inspection checklist. The City will verify the discharge testing. If all components are installed properly, and the discharge testing is approved, the remaining construction and testing can proceed.

D. The service line may then be connected into the existing service line and all items backfilled. Startup, testing, cleanup, demolition of septic tank, and opening of the ball valve can then be completed.

END OF SECTION

SECTION 18160

PIPE INSTALLATION

PART 1 GENERAL

1.01 SUMMARY

A. This section includes installation and testing of discharge lines and service lines from the grinder pump.

1.02 REFERENCES

A. American Society for Testing and Material (ASTM):

1. C12 - Installation of Vitrified Clay Pipe Lines.
2. C828 - Low Pressure Air Test of Vitrified Clay Pipe Lines.
3. D2774-04 - Standard Practice for Underground Installation of Thermoplastic Pressure Pipe
4. D2321-04 - Standard Practice for Underground Installation of Thermoplastic Pipe for Sewers and Other Gravity-Flow Applications

B. American Society of Mechanical Engineers (ASME):

1. B31 - Code for Pressure Piping.
2. B31.1 - Power Piping Section.
3. Boiler Code - Section 1.

C. American Water Works Association (AWWA):

1. C105 - Polyethylene Encasement for Gray and Ductile Cast-Iron Piping for Water and Other Liquids.
2. C206 - Field Welding of Steel Water Pipe.
3. C600 - Installation of Gray and Ductile Cast Iron Water Mains and Appurtenances.
4. C651 - Disinfecting Watermains.
5. M11 - Steel Pipe Design and Installation.

PART 2 PRODUCTS

2.01 AS SPECIFIED IN DIVISION 18, SECTION 18110 AND DETAILS

PART 3 EXECUTION

3.01 INSTALLATION - BELOW GROUND PIPING

A. Discharge and Service Line Piping

1. Utilize equipment, methods, and materials ensuring proper installation to depths and grades indicated.

   a. Maintain a minimum of 42 inches of cover from existing grade to top of discharge pipe.

b. Maintain a slope of 2% or greater from the existing service line or foundation wall, to the grinder pump station.

c. Do not lay pipe on blocks unless pipe is to receive total concrete encasement.

d. Accomplish horizontal and vertical curve alignments with fittings and pipe defections. Limit joint deflection with ductile-iron pipe and fittings to conform to AWWA C600. Deflection may, with approval, exceed standard deflections by utilizing machined bells. Deflections for PVC pipe joints shall not exceed the manufacturer's recommendations.

2. Install pipe of size, materials, strength class, and joint type as specified in Section 18110, with embedment as indicated on Discharge Line Installation Detail within this Design and Construction Manual.

3. Insofar as possible, commence laying at downstream end of line and install pipe with spigot ends in direction of flow.

4. Clean interior of all pipe, fittings, and joints prior to installation. Exclude entrance of foreign matter if work is suspended or stopped.

   a. Close open ends of pipe with snug-fitting closures.

   b. Do not let water fill trench. Include provisions to prevent flotation should water control measures prove inadequate.

   c. Remove water, sand, mud and other undesirable material from trench before removal of end cap.

5. Brace or anchor as required to prevent displacement after establishing final position.

6. Perform only when weather and trench conditions are suitable. Do not lay in water.

7. Separation of Water Mains and Sanitary Sewers:

   a. Horizontal Separation. Whenever possible, any sanitary sewer shall be laid at least 10 feet, horizontally, from a water main. The distance shall be measured from edge-to-edge. When local conditions prevent a lateral separation of 10 feet, a sanitary or storm sewer may be laid closer than 10 feet to a water main provided that the sanitary is laid at least 18 inches below the bottom of the water line.

   b. Vertical Separation: Whenever sanitary sewers or house sewers must cross water mains, the sewer shall be laid at such an elevation that the outside bottom of the water main is no closer than 18 inches above the outside of the top of the sewer. This vertical separation shall be maintained for that portion of the sanitary sewer or house sewer located within 10 feet, horizontally, of any water line it crosses. The crossing shall be arranged so that the sewer joints will be equal distance and as far as possible from the water main joints.

c. Separation to Force Mains: There shall be at least a 10-foot horizontal separation between water mains and sanitary sewer force mains, and they shall be in separate trenches. In areas where these separations cannot be obtained, either the water line or the sewer line shall be cased in a continuous casing.

B. Jointing:

1. General Requirements:

a. Locate joint to provide for differential movement at changes in type of pipe embedment, impervious trench checks, and structures. Joint to be not more than 2 feet from structure wall, unless supported by concrete cradle structurally continuous with base slab or footing. .

b. Perform in accordance with manufacturer's recommendations.

c. Clean and lubricate all joint and rubber gasket surfaces with lubricant recommended.

d. Utilize methods and equipment capable of fully homing or making up joints without damage.

e. Check joint opening and deflection for specification limits.

C. Cutting Pipe:

1. Cut in neat manner without damage to pipe.

2. Remove burrs and sharp edges and smooth the pipe end by grinding.

3. Repair lining where required and as approved.

D. Closure Pieces:

1. Connect two segments of pipeline or a pipeline segment and structure with short sections of pipe fabricated for the purpose.

2. Locations of joints, types of joints, and pipe materials and strength classifications shall comply with specifications.

3. May be accomplished with sleeve couplings:

a. Of length such that gaskets are not less than 3" from pipe ends.

b. Include spacer ring identical to pipe end such that clear space in closure does not exceed 1/4".

E. Remove plugs from existing low pressure sewer main pipe in order to complete connections to low pressure sewer main existing pipe.

F. Furnish and install test plugs where necessary to properly complete discharge testing.

1. Test plugs shall be as manufactured by pipe supplier.

2. Plugs shall be push-on, flanged, mechanical joint or restrained as required for ductile iron pipe and shall be watertight against heads equal to the specified test pressure.

3. Secure plugs in place to facilitate removal when required to connect pipe.

4. Restrain plugs to fittings where necessary.

G. Restrained joints or thrust blocks shall be installed where required to counteract internal pressure forces.

H. Install thrust blocks in accordance with detail.

3.02 CONNECTIONS WITH EXISTING LOW PRESSURE SEWER MAIN

A. The ball valve and valve box may already be installed on some properties. If this is the case, Connections between private property improvements and the low pressure sewer main shall be made per details. The connection to the low pressure sewer main shall not be made until all inspections and testing have been approved by the City.

B. For Connection to Dissimilar Pipe Materials. Where the discharge piping is to be connected to the low pressure sewer main and they are of dissimilar pipe materials, the connection shall be made by means of a transition coupling.

3.03 FIELD TESTING

A. Pressure Tests:

1. The Contractor shall furnish all pumps, piping, labor and other materials and services necessary to bring the piping up to the specified test pressure.

2. All pipes shall be pressure tested. Pipes which will be pressurized under normal operating conditions shall conform to the requirements of the hydrostatic pressure test. All other piping shall meet the requirements of the air leakage test.

3. Pipe in the sections to be tested shall not be backfilled until testing has been completed and approved by the City.

B. Hydrostatic Pressure Test:

1. Discharge Line:

a. Test connections shall be made and the pipe filled with water. A pressure of not less than 1.5 times the normal operating pressure (for the lowest point on the pipe line) but not less than 50 pounds per square inch (psi) shall be used for testing.

b. After air removal, water shall be pumped in to bring the pipe to the specified pressure. After one hour, additional water shall be drawn from a container of known volume. The amount of water required to return the system to the specified pressure shall not exceed the amount determined by the following formula:

$$Q = SD(P)^{1/2}/133000,$$

Where Q - Total allowable leakage in two hours, gallons.
S - Length of section tested, feet.
D - Nominal pipe diameter, inches.
P - Test pressure, psi.

c. All exposed pipe, fittings, valves, hydrants and joints shall be inspected and all evidence of moisture appearing on the surface of the ground during the test shall be investigated by the Contractor by excavation where the pipe has been covered with backfill. Should the leakage test results exceed allowable leakage, the test pressure shall be maintained for an additional period of time to facilitate location of leaks.

d. All pipe, fittings, valves, pipe joints, hydrants, and other materials which are found to be defective when the pipe line is tested shall be removed from the line immediately and replaced with new and acceptable material by and at the expense of the Contractor. The pressure test shall be repeated after repairing leaks and other defective work until the pipe line installation conforms to specified requirements and is accepted by the City.

3.04 PIPING AND TEST SCHEDULE

A. Discharge and service line piping shall be installed in accordance with the following schedule.

B. The Contractor may, at his expense, furnish piping of the same material as shown in the PIPING SCHEDULE but of greater pressure rating than that specified.

C. Where bell and spigot joints are indicated on the plans or specified, mechanical joints or push-on joints may be used.

PIPING SCHEDULE

Use	Piping	Joint/Fittings	Test Pressure
Discharge Piping	HDPE SDR 11 or PVC Schedule 40	Fusion Welded or Socketed joined by cold welding	50 psi

3.05 INSPECTION

A. Inspection of pipe and fittings will be conducted by the City after piping is installed prior to backfill.

3.06 ACCEPTANCE

A. Pipe will be inspected by the City for approval as specified in manual and Division 18, Section 18110.

END OF SECTION

Section 7 DETAILS

All private property improvements shall meet the enclosed details to obtain approval from the City.

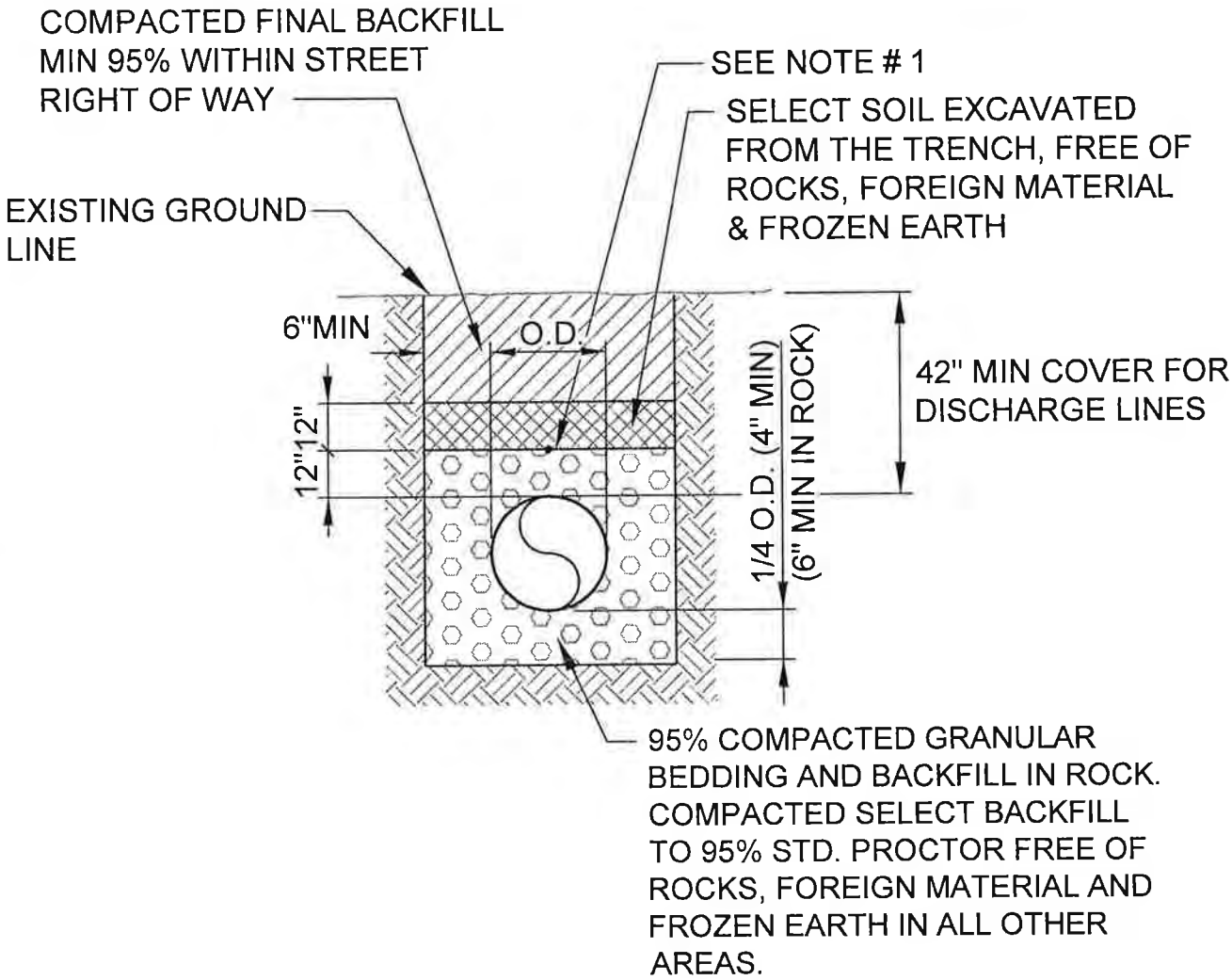

NOTES:

1. TRACER WIRE FOR DISCHARGE PIPING, HIGH MOLECULAR WEIGHT - POLYETHYLENE TRACER WIRE, 1-#14 AWG, BY PAIGE ELECTRIC OR APPROVED EQUAL. SPLICING SHALL BE WITH 3M DBY/DBR DIRECT BURY SPLICE KITS.

2. MARKING TAPE NOT REQUIRED WHEN DIRECTIONAL DRILLING. TRACER WIRE SHALL BE PULLED WHEN THE DIRECTIONAL DRILLING IS UTILIZED.

3. TWO 45° BENDS SHALL BE USED TO ACCOMPLISH A 90° BEND.

DISCHARGE LINE INSTALLATION DETAIL

NOT TO SCALE

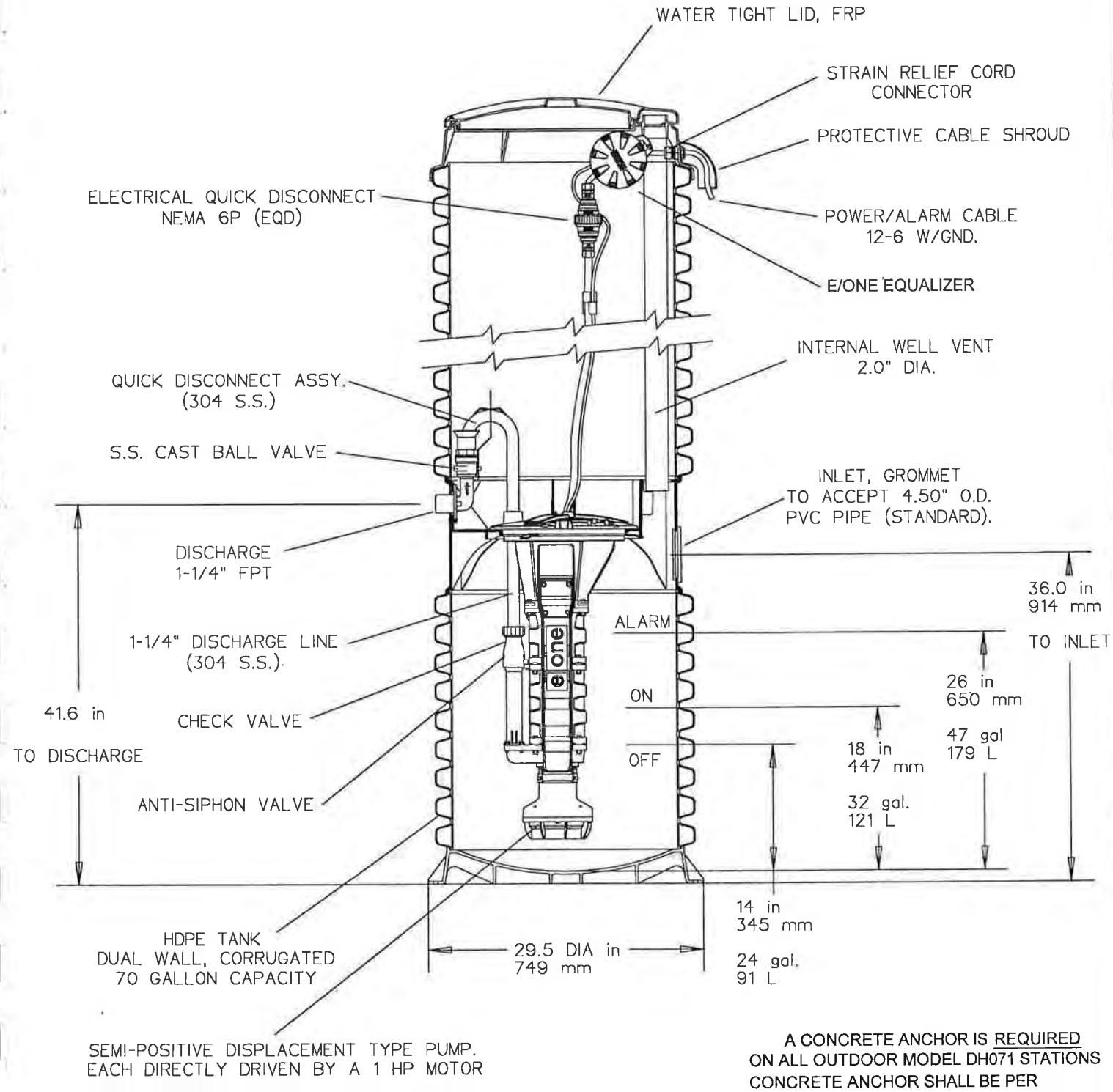

A CONCRETE ANCHOR IS REQUIRED ON ALL OUTDOOR MODEL DH071 STATIONS CONCRETE ANCHOR SHALL BE PER MANUFACTURER'S RECOMMENDATIONS AND PER SECTION 03300 OF THE DESIGN AND CONSTRUCTION MANUAL SPECIFICATIONS

ENVIRONMENT ONE GRINDER PUMP STATION

MODEL DH-071

NOT TO SCALE

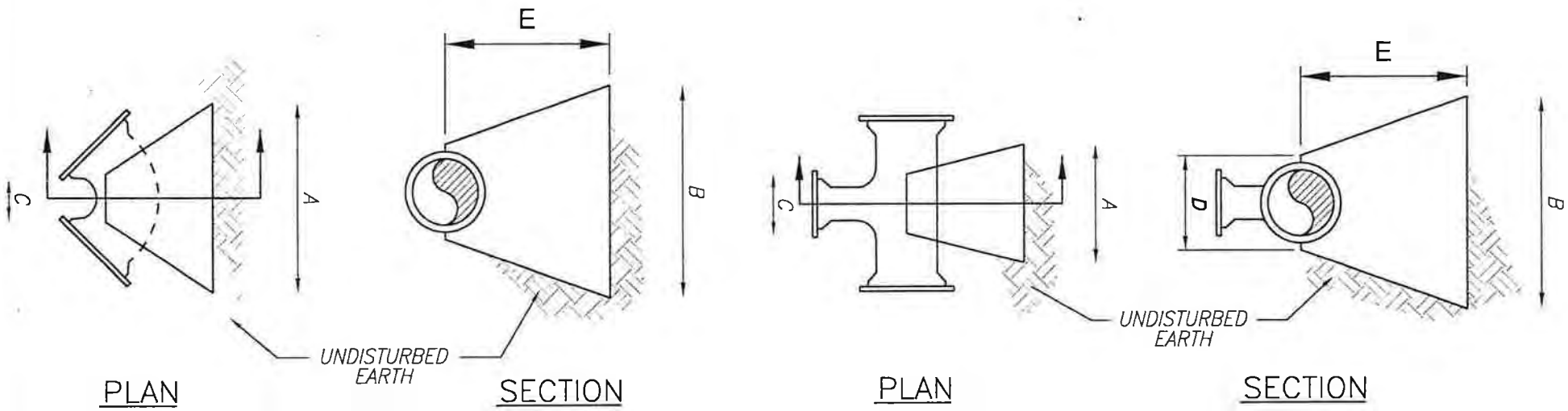

SIZE/FITTING		A	B	C	D	E	V
1-1/4"	22.5°	8	8	8	8	6	0.2
	45°	14	8	8	8	12	0.6
	90° *	16	12	8	8	12	0.9
	TEE/PLUG	12	12	8	8	12	0.7

UNITS A THRU E ARE IN INCHES.

* NOTE: USE 2-45° BENDS IN LIEU OF 90° BEND.

NOTE:

1. V=VOLUME OF CONCRETE REQUIRED FOR THRUST BLOCKS CONSTRUCTED TO LINES SHOWN. (CUBIC FEET)

2. THRUST BLOCKS ARE BASED ON A WORKING PRESSURE OF 100 P.S.I. PLUS 50% SURGE, AND AN ALLOWABLE SOIL BEARING PRESSURE OF 2000 P.S.F.

3. DO NOT COVER JOINTS WITH CONCRETE. 4. USE 3/8" PLYWOOD SEPARATOR BETWEEN BLOCKS AND PLUGS TO PROVIDE FOR FUTURE REMOVAL.

4. INSTALL AT ALL BURIED TEES, ELBOWS, BENDS, AND DEAD ENDS.

5. PLACE AGAINST UNDISTURBED EARTH.

THRUST BLOCK DETAILS
FOR PVC SCHEDULE 40 DISCHARGE PIPING
NOT TO SCALE

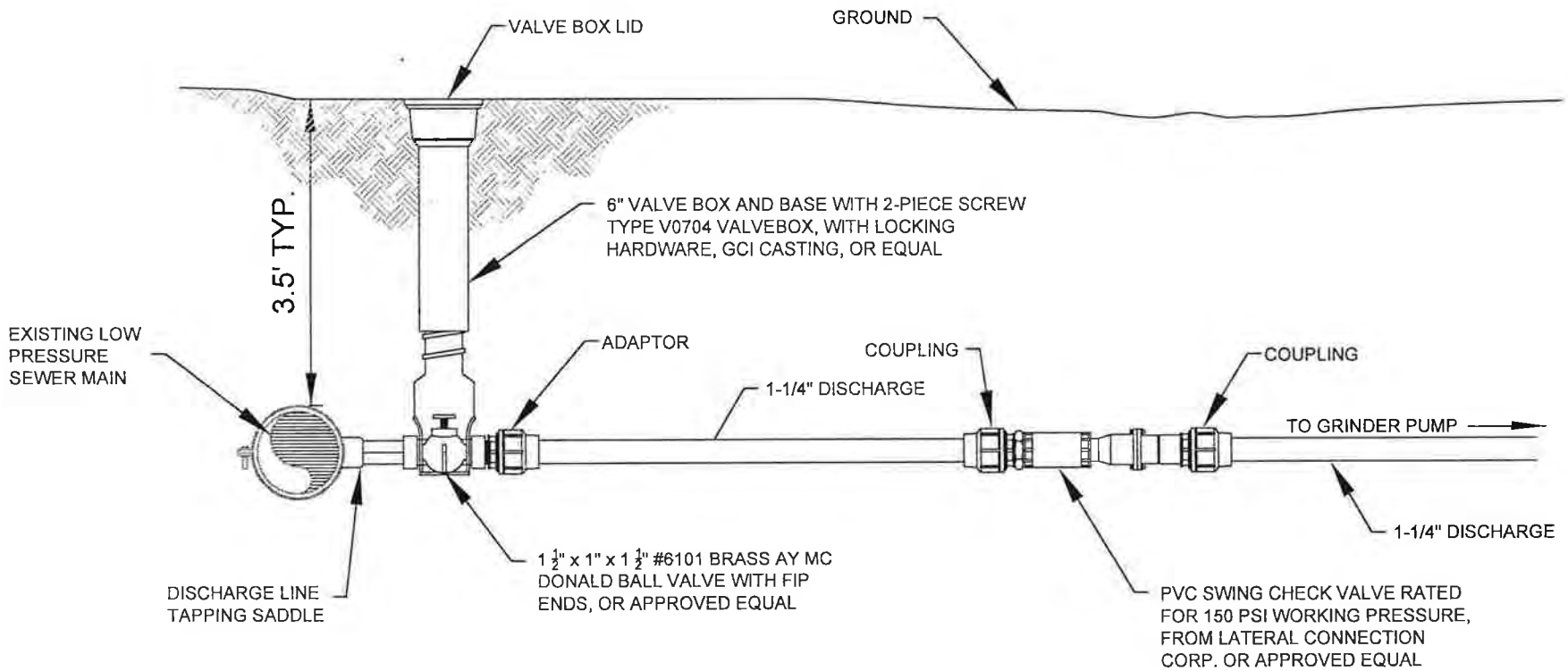

NOTES:

1. DISCHARGE PIPING SHALL BE SUBJECT TO AIR TEST PER THE SPECIFICATIONS.

2. LOCATION OF BALL VALVE (IN LOW PRESSURE SEWER):

   A. IF THE MAIN AND THE HOUSE ARE ON THE SAME SIDE OF THE STREET, INSTALL THE SHUT OFF VALVE NEAR THE MAIN.

   B. IF THE MAIN AND THE HOUSE ARE ON OPPOSITE SIDES OF THE STREET, INSTALL THE SHUT OFF VALVE NEAR PROPERTY LINE.

3. BALL VALVE AND VALVE BOX MAY ALREADY BE INSTALLED ON SOME PROPERTIES. IF THIS IS THE CASE, THEN THE END CAP WILL NEED TO BE REMOVED AND THE DISCHARGE LINE CONNECTED INTO STUB-OUT.

DISCHARGE LINE INSTALLATION WITH BALL VALVE AND CHECK VALVE

NOT TO SCALE

Section 8 APPROVED CONTRACTORS

CITY OF LEE'S SUMMIT, MISSOURI
PRAIRIE LEE LAKE
LOW PRESSURE SEWER SYSTEM

APPROVED CONTRACTOR LIST FOR PRIVATE PROPERTY IMPROVEMENTS

To be completed with contractors interested in the project

CITY OF LEE'S SUMMIT, MISSOURI
PRAIRIE LEE LAKE
LOW PRESSURE SEWER SYSTEM

SITE PLAN SUBMITTAL
COVER SHEET

The contractor shall submit to the City of Lee's Summit, Missouri: Public Works, attn. Ray Seidelman, 220 SE Green Street, Lee's Summit, Missouri 64063, three copies of this form, a Site Plan, and material cut sheets, for review and approval.

A. Submittal Date: April 10, 2009

Site Address: 1615 Ne Ozark Drive

City, Street, & Zip: Lee's Summit, MO 64086

B. Home Owner

Name: Jane Doe

Address: 1615 Ne Ozark Drive

City, Street, & Zip: Lee's Summit, MO 64086

Phone Number: 816-988-8888

Alternate Phone Number: 816-999-9999

C. Contractor or Plumber

Contact Name: John Bellerive

Company Name: Haynes Equipment Co., Inc.

Address: 15725 Pflumm Road

City, State & Zip: Olathe, KS 66062

Phone Number: 913-782-4962

Fax Number: 913-782-5894

-End-

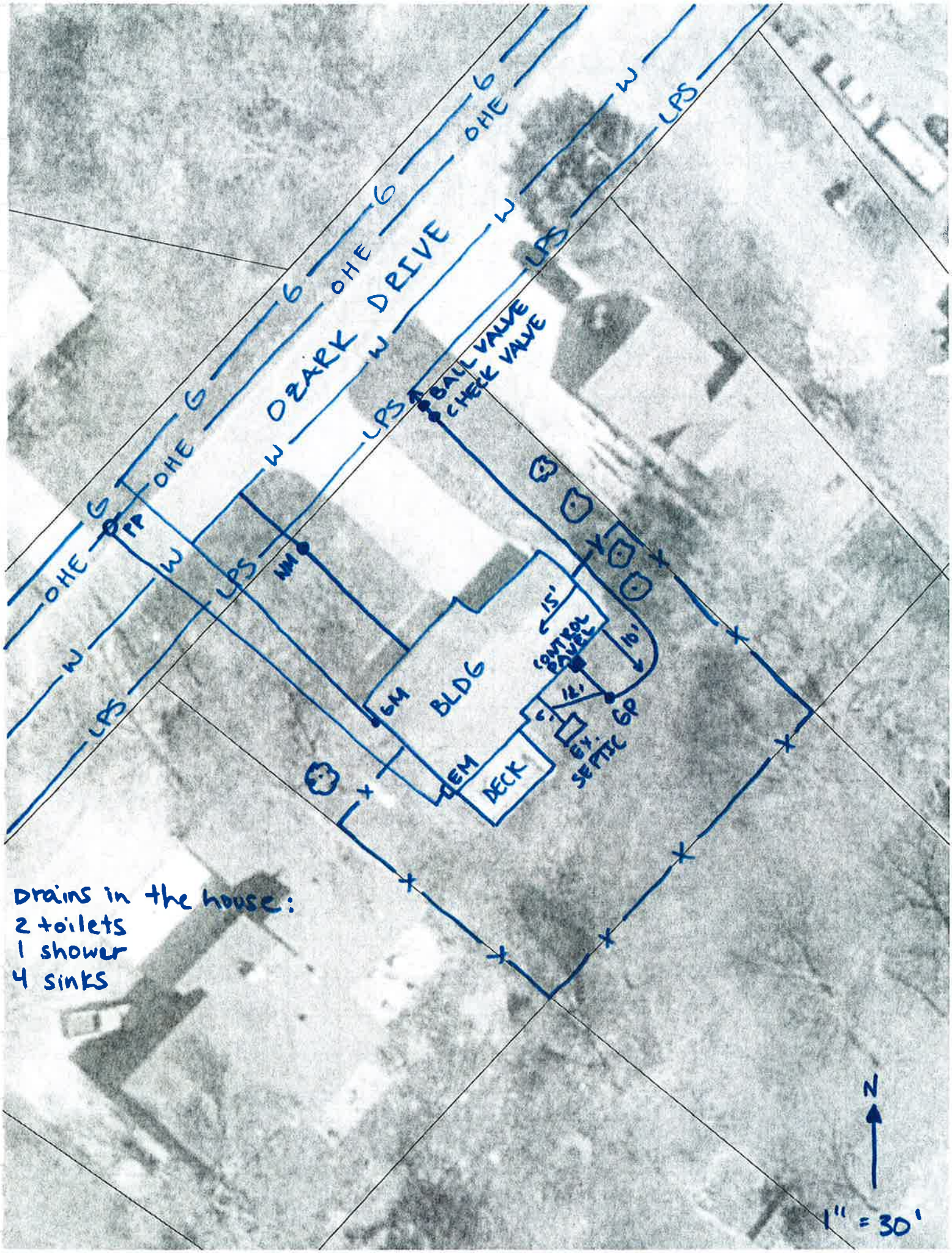

Drains in the house:
2 toilets
1 shower
4 sinks

OPTIONS : ☐ DH071 (HARD WIRED LEVEL CONTROLS)
☐ DR071 (WIRELESS LEVEL CONTROLS)

FIELD JOINT REQUIRED
FOR MODELS
DH071-129 / DR071-129
&
DH071-160 / DR071-160

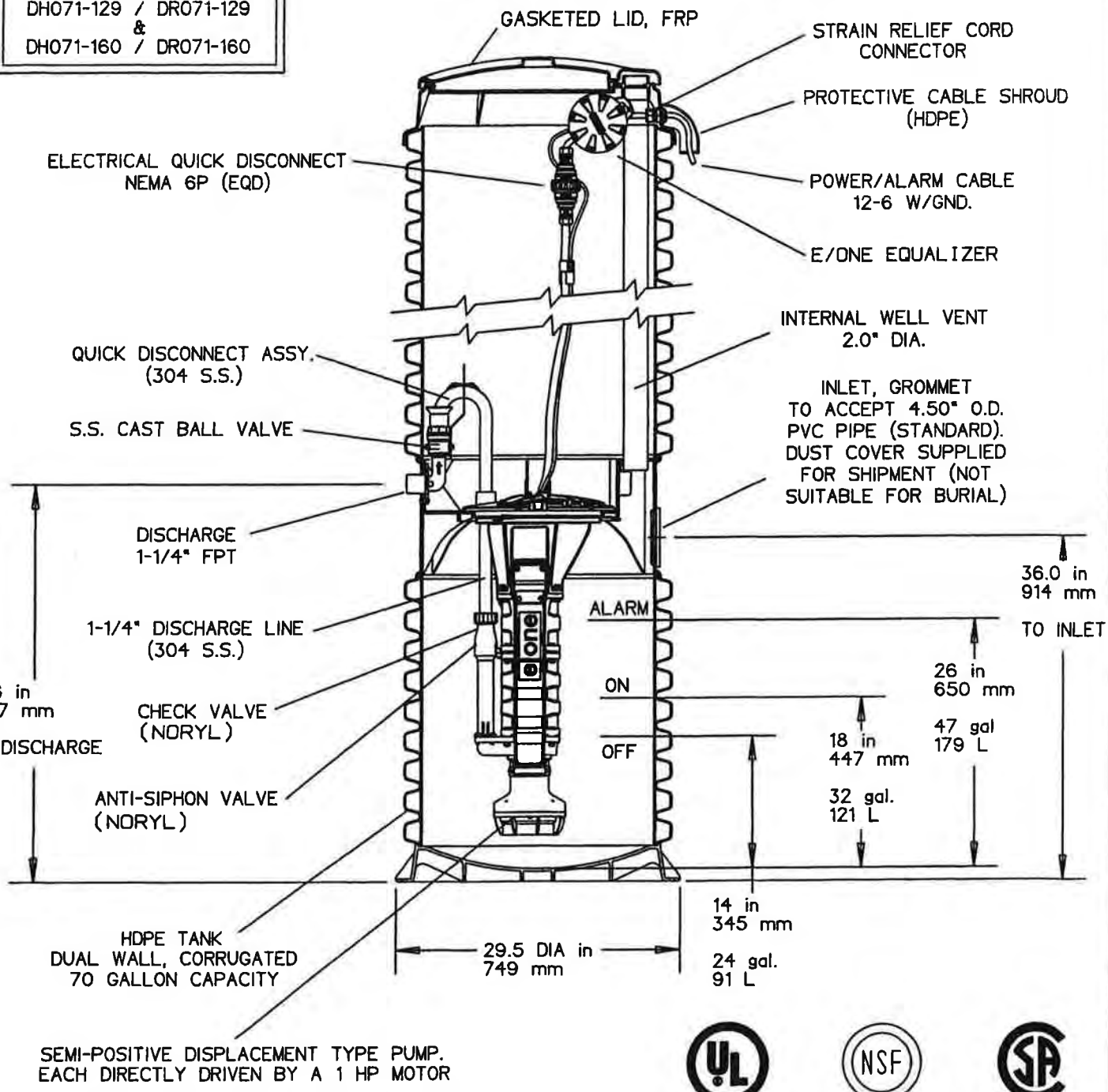

CONCRETE BALLAST MAY BE REQUIRED
SEE INSTALLATION INSTRUCTIONS
FOR DETAILS

AD	CH	07/12/07	A	
DR BY	CHK'D	DATE	ISSUE	SCALE

e one
SEWER SYSTEMS

MODEL DH071 / DR071
DETAIL SHEET

NA0050P02

e/one sentry

Custom Alarm Panels for E/One Low Pressure Sewer Systems

The World's Best Low Pressure Sewer System Sets a New Standard in Reliability and Convenience

e one
SEWER SYSTEMS

e/one sentry

The Sentry line of alarm panels is custom designed for use with E/One grinder pump systems. **The E/One Sentry™ alarm panels provide the latest technology and the greatest flexibility** in customizing features to satisfy individual needs. The new alarm panels can be configured to provide functions ranging from basic alarm indication to advanced warning of pending service requirements. In between, **there are numerous features available** including an event counter; run-time meter; service disconnect capability; and remote alarm indication.

Like the E/One grinder pump station, all panels are UL and CSA listed and meet all applicable NEC and NFPA codes and standards. Furthermore, all E/One Sentry alarm panels are housed in NEMA 4X lockable enclosures, suitable for mounting on a wall or a post.

The basic E/One Sentry panel provides features essential to any installation:

A. Circuit breakers for pump power and alarm circuits
B. Audible high level alarm indication
C. Visual high level alarm indication
D. High level alarm silence switch
E. Manual Run switch
F. Redundant "Start" function with high level alarm
G. Run indicator to show when pump is operating

THE E/ONE REMOTE SENTRY DISPLAY MODULE provides visual and audible indication when the water level inside the grinder pump tank reaches a predetermined "high" level during normal operation, or in the event of a power outage (with hard-wired version of *Extreme* core and optional contacts in panel). It is ideally suited for installations where the outdoor alarm panel location is obstructed from view, or where an Indoor Unit (IDU) installation is isolated in a utility room.

The Remote Sentry includes:

- A low profile attractive case (5.4"W x 3.69"H x 1.25"D)
- Lithium battery
- Audible alarm (70dB)
- Push-to-silence audible alarm switch
- Push-to-test visual and audible alarm

Now Available in Two Upgrades

E/ONE SENTRY PROTECT

The E/One Sentry Protect panel provides important protection from external conditions that could otherwise prove damaging to the E/One grinder pump station.

Adding the Protect option to the E/One Sentry panel provides a Trouble indication and shuts down the pump/core temporarily in the event of an unacceptable operating condition.

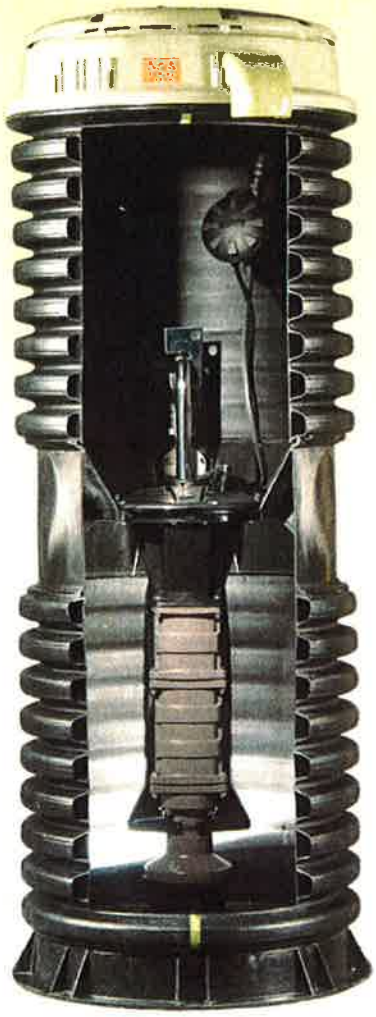

The pump/core will automatically return to Normal operation when the condition is resolved. The Protect feature provides monitoring of:

- Brownout conditions with the electrical power supply
- System over-pressure condition such as with a closed valve
- Run-dry operation of the pump/core

E/ONE SENTRY PROTECT PLUS

Taking it to the next level, the E/One Sentry Protect Plus includes the benefits of the Protect option as well as a diagnostics package that provides advance warning of pending service needs by monitoring major operating conditions and providing a Trouble indication when these conditions fall outside of normal ranges. Depending upon the severity of the abnormal condition, the grinder pump station may continue to operate. The Protect Plus feature provides monitoring of:

- AC input voltage – if input voltage falls below 88% or above 112% of normal line voltage a Trouble indication is provided
- Amperage – if amperage exceeds preset limits a Trouble indication is provided
- Pump run-time – if the pump operates for extended periods (adjustable) a Trouble indication is provided

Sentry Maximizes
Reliability and Convenience

The following features are included or available with the E/One Sentry Protect Plus to maximize reliability and convenience:

1. Visual Alarm Indicator
2. Audible Alarm
3. Alarm Silence Switch
4. GFCI Receptacle
   (2) 120-volt, 15 Amp GFCI receptacles
   (available option)
5. Main Service Disconnect Breaker
   (available option)
6. Easy-Access Terminal Strips Interface
7. Display Panel Operating Indicators
   - Ready (AC Power) Indicator
   - Pump Running Indicator
   - Trouble Indicator
   - High Level Alarm Indicator
8. LCD Display
   - Manual Run Switch/ Enter Switch
   - Scroll Switch
   - Trouble indications include:
     - Brown-out Condition
     - Run-dry Condition
     - System Over-pressure Condition
     - Voltage Problem
     - Amperage Problem
     - Run-time Limit Exceeded
9. Diagnostic Mode Switch
   (For system setup/service)
   - Diagnostic Mode Indicators
   - Pump Performance provides access to performance statistics including:
     - Real-time Voltage
     - Real-time Amperage
     - Real-time Wattage
     - Minimum Voltage
     - Maximum Voltage
     - Minimum Amperage
     - Maximum Amperage
     - Minimum Run-time
     - Maximum Run-time
     - Average Run-time
     - Last Run-time
     - Event Counter
     - Hour Meter
   - Initialize System
   - Run Limit
   - Alarm Delay
   - Power Delay
10. Generator Receptacle
    (available option)
11. Auto Transfer Switch
    (AC Mains to Portable Generator)
    (available option)

e one
SEWER SYSTEMS

Environment One Corporation
2773 Balltown Road
Niskayuna, NY USA 12309-1090
Voice (01) 518.346.6161
Fax 518.346.6188
www.eone.com

A Precision Castparts Company
LM000323 Rev. B

E/ONE EXTREME SERIES

E/One Sentry™

Alarm Panel — Basic Package

Description

The E/One Sentry panels are custom designed for use with Environment One grinder pump stations. They can be configured to meet the needs of your application, from basic alarm indication to advanced warning of pending service requirements.

E/One Sentry panels are supplied with audible and visual high level alarms. They are easily installed in accordance with relevant national and local codes. Standard panels are approved by UL, CSA, CE and NSF to ensure high quality and safety.

The panel features a corrosion-proof, NEMA 4X-rated, thermoplastic enclosure. A padlock is provided to prevent unauthorized entry (safety front).

Features

Circuit breakers, 240 or 120 VAC service

Terminal blocks and ground lugs

Audible alarm with manual silence

Manual run feature and run indicator

Redundant "Start" function with high level alarm

Safety front — authorized personnel only when locked

Conformal-coated alarm board (both sides)

Alarm board overload protection

Please consult factory for special applications.

PERFORMANCE PIPE
A DIVISION OF CHEVRON PHILLIPS CHEMICAL COMPANY LP

www.performancepipe.com

Performance Pipe Molded Fittings Submittal

This submittal outlines the standards and cell classification for Molded fittings produced by Performance Pipe.

Performance Pipe Molded Fittings are produced in six different Series for application in various industries.

The DriscoPlex 8100 series fitting (IPS or CTS) is an all purpose fitting that meets several application standards. It is produced out of High Performance High Density PE4710. This material code designation meets and exceeds PE3408, PE3608, PE4710 and PE100 submittal requests.

The Driscoplex 6500 series fittings are produced of High Performance Medium Density resin. It meets or exceeds PE2406 and 2708 submittal requests.

The Factory Mutual Approved (FMA) Driscoplex 1500 and 1600 series fittings are manufactured with High Performance High Density PE4710 resin.

The Driscoplex 4000 Series Ductile Iron Pipe Size (DIPS) fittings are produced to several manufacturing standards. The fittings are manufactured of High Performance High Density PE4710 resin.

The Driscoplex 5300 series fittings are made for the Geothermal Industry. The fittings are manufactured from High Performance High Density resins that meet or exceed PE3408 and 3608 submittal requests.

Table 1

Series	Application	Manufacturing Standard	ASTM Material Designation Code	Cell Classification	Sizes of Manufacture
8100	**Mun., Ind. & Energy Gas, Water, Sewer, Oil field, Landfill Various**	ASTM D-2513 AWWA C906 ASTM D-3261	**PE 4710**	**445574C**	½" – 1 ¼" CTS ½" – 8" IPS
6500	**Gas Distribution**	ASTM D-2513 ASTM D-3261 ASTM D-2683 CAN/CSA-B137.4	**PE 2708**	**234373E**	½" – 1 ¼" CTS ½" – 8" IPS
4000 (DIPS)	**Mun. & Ind. Potable Water, Various**	AWWA C906 ASTM F-714 ASTM D-3035	**PE 4710**	**445574C**	3" – 8" DIPS
1500 (IPS) 1600 (DIPS)	**Factory Mutual Fire Main(FMA)**	FM 1610 ASTM F-714 AWWA 901 & C906	**PE 4710**	**445574C**	2"- 8" IPS
5300	**Geothermal**	ASTM D3035 ASTM F714	**PE3608**	**445574C**	2"- 8" IPS

August 2007 Supersedes all previous publications
© 2007 Chevron Phillips Chemical Company LP

Performance Pipe Mechanical Joint Adapters are manufactured through 12" (IPS & DIPS) sizes.

Performance Pipe Flange Adapters 20", 22" and 24" and transition fittings are manufactured of PE3608 resin.
All other High Density fittings are manufactured of PE4710 High Performance High Density resins.

The applications listed in Table 1 are limited by the table space requirements. Please see the Performance Pipe Municipal, Industrial & Energy Submittal Sheet (PP515) for applications and Industries.

Performance Pipe PE4710 fittings meet and exceed PE3408, PE3608, PE4710, and PE100 submittal requirements.

TABLE 2

Standard	Application
AWWA C-906 AWWA C-901	Covers manufacturing of pressure pipe and fittings primarily intended for use in the transportation of water and other liquids.
ASTM D-2513	Covers manufacturing requirements and test methods for fittings intended for use in fuel gas mains and services.
ASTM F-714	Covers polyethylene pipe made in dimensions based on outside diameters 3" and larger.
ASTM D-3035	Covers polyethylene pipe made in dimensions based on outside diameters less than 3".
ASTM D-3261	This Specification covers molded and machined fittings for use with polyethylene pipe for various applications.
ASTM D-2683	Covers socket-type fittings for outside diameter controlled polyethylene fittings.
CAN/CSA-B137.4	Covers Canadian Standards Association standards for outside diameter controlled gas pipe & fittings.
NSF-61	Performance Pipe PE3608 and PE4710 high density fittings are produced from NSF 61 listed resin compounds.

Performance pipe's fittings are connected using butt fusion, sidewall fusion, socket fusion, and other mechanical methods, such as flanges, mechanical joint adapters and compression couplings.

August 2007 Supersedes all previous publications
© 2007 Chevron Phillips Chemical Company LP

TLC THE LATERAL CONNECTION CORP.

"Tap Into The Source"

Home
Products
Applications
Specifications
Company
Contact

PVC Swing Checks

PVC Swing Check Features

- Available in PVC
- Sizes 1¼" x 1¼" rated at 200 PSI @ 73° F
- Sizes 1¼" x 1½" to 2" x 2" rated at 160 PSI @ 73° F
- Compression (IPS, CTS) & Socket (PVC) end connectors available
- Fully serviceable
- EPDM O-Rings
- 100% hydro tested prior to leaving the factory

End Connections Availability Table

	Compression		Compression x Socket
Size	IPS	CTS	IPS x PVC

Regular Pattern Ball Valves - 300 PSIG Water

SIZES AVAILABLE

Size	INLET	BALL	OUTLET	6103T* FLATHEAD	6103Q*◆ FLATHEAD	6103-3Q* FLATHEAD	6103-22* FLATHEAD / 6103W-22* LOCKWING	
				T CTS Comp x FLARE	Q CTS Comp x FLARE	3Q PEP Comp x FLARE	22 CTS Comp x FLARE	
				FLATHEAD	FLATHEAD	FLATHEAD	FLATHEAD	LOCKWING
3/4"	3/4"	3/4"	3/4"	●	●	●	●	
1" x 3/4" x 3/4"	1"	3/4"	3/4"	●			●	
1"	1"	1"	1"	●			●	●

SIZES AVAILABLE

Size	INLET	BALL	OUTLET	6101 FLATHEAD / 6101W LOCKWING		6101WW DOUBLE LOCKWING	6101FH INTEGRAL HANDLE FLATHEAD
				FNPT x FNPT		FNPT X FNPT	FNPT X FNPT
				FLATHEAD	LOCKWING	DOUBLE LOCKWING	FLATHEAD/INTEGRAL HANDLE
1/2" x 5/8" x 1/2"	1/2"	5/8"	1/2"	●	●		
3/4" x 5/8" x 3/4"	3/4"	5/8"	3/4"	●	●	●	●
3/4"	3/4"	3/4"	3/4"	●	●	●	●
1" x 3/4" x 3/4"	1"	3/4"	3/4"	●	●		
1" x 3/4" x 1"	1"	3/4"	1"	●	●		
1"	1"	1"	1"	●	●	●	●
1¼" x 1" x 1"	1¼"	1"	1"	●	●		
1¼" x 1" x 1¼"	1¼"	1"	1¼"	●	●		
1¼" x 1½" x 1¼"	1¼"	1½"	1¼"	●			●
1½"	1½"	1½"	1½"	●	●		●
2"	2"	2"	2"	●	●		●
2½" x 2" x 2½"	2½"	2"	2½"	●	●		

Ball Valves with Dielectric Connections - 300 PSIG Water

SIZES AVAILABLE

Size	INLET	BALL	OUTLET	6100DBQ* FLATHEAD	6100DB-22* FLATHEAD
				Q CTS Comp x Q CTS Comp	22 CTS Comp x 22 CTS Comp
3/4"	3/4"	3/4"	3/4"		●
1"	1"	1"	1"	●	●
1½"	1½"	1½"	1½"		●
2"	2"	2"	2"		●

•Contact factory for other variations.

5 1/4" Shaft 2-Piece Valve Boxes

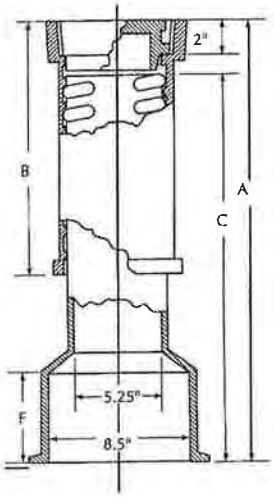

Fig. No. 4905

Fig. No. 4905

2-Piece Screw Type Adjustable Valve Box

- Designed to cover the Stuffing box only on Valves up to 10" in size.
- Square Screw Type Top available 15" and 26 1/2" length.
- Locking Covers available. (Gas, Sewer, Water)

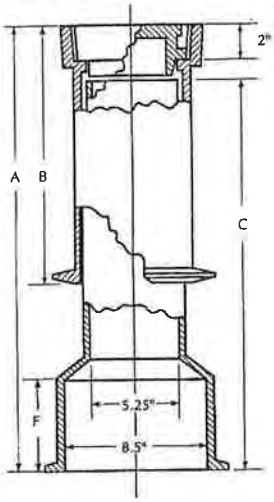

Fig. No. 4908

Fig. No. 4908

2-Piece Sliding Type Adjustable Valve Box

- This Box is the same as the one at left, except it is Sliding Type.
- Some feel the Sliding feature helps prevent impact to valve from Surface.
- Flange at bottom of Top Section can be any distance from top or omitted.
- Locking Covers available. (Gas, Sewer, Water)
- Non-tip Covers with longer skirt available.

See Table on page 10 for proper length for various valves.

Cover marked GAS or WATER or Special Lettering at Extra Cost. Cover weight - 13 lbs.

Size No.	Extension Range - A	Top Section & Cover No.	Top Section & Cover Dim. B	Top Section & Cover Wt.	Bottom Section No.	Bottom Section Dim. C	Bottom Section Wt.	Height Bell-F	Wt.
18	18-24	54	10.5	35.0	61	14.5	23.0	6.5	58.0
20	27-36	55	15.0	42.0	62	24.0	31.5	6.5	73.5
21	39-48	55	15.0	42.0	64	36.0	46.0	8.5	88.0
22	39-60	56	26.0	58.0	64	36.0	46.0	8.5	104.0
23	48-72	Longer Boxes made by adding Extensions to No. 22.							
24	48-84								
25	48-96								

Size No.	Extension Range - A	Top Section & Cover No.	Top Section & Cover Dim. B	Top Section & Cover Wt.	Bottom Section No.	Bottom Section Dim. C	Bottom Section Wt.	Height Bell-F	Wt.
5461-S	18-24	54-S	10.5	35.0	61-S	15.0	24.0	6.5	59.0
5561-S	23-29	55-S	15.5	42.0	61-S	15.0	24.0	6.5	65.1
5562-S	27-36	55-S	15.5	42.0	62-S	24.5	33.0	6.5	75.0
5564-S	39-48	55-S	15.5	42.0	64-S	36.0	46.0	8.5	88.0
5662-S	38-48	56-S	26.5	57.0	62-S	24.5	33.0	6.5	90.0
5664-S	39-60	56-S	26.5	57.0	64-S	36.0	46.0	8.5	103.0
5468-S	63-68	Longer Boxes made by adding Extensions to No. 5664-S							
5568-S	63-73								
5668-S	63-84								

Extensions

Fig. No. 4905-X

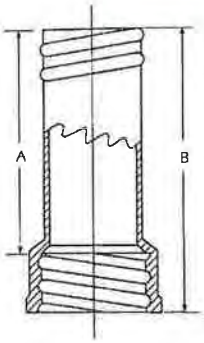

Fig. No. 4905-X

Screw Extension

Size No.	Increases Length A	Overall Length B	Wt.
57	9.0	13.0	20.0
58	14.0	18.0	23.0
59	20.0	24.0	31.5
60	24.0	30.0	36.5
61	30.0	36.0	46.0

Fig. No. 4906-X

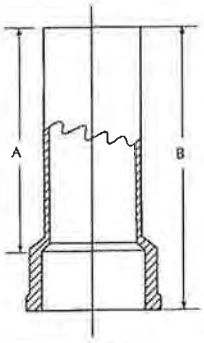

Fig. No. 4906-X

Sliding Extension

Size No.	Increases Length A	Overall Length B	Wt.
63-E	9.0	13.0	20.0
64-E	14.0	18.0	23.0
65-E	20.0	24.0	31.5
66-E	24.0	30.0	36.5
67-E	30.0	36.0	46.0

Accessories

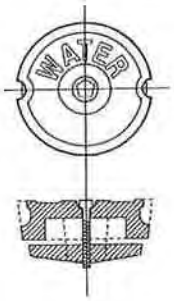

Fig. No. 4904-L

Locking Cover

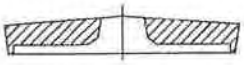

Fig. No. 5060

Rock Catcher

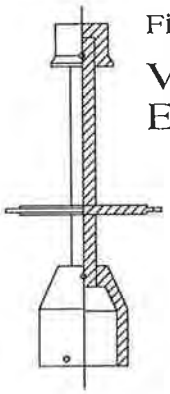

Fig. No. 5051

Valve Stem Extension Kit

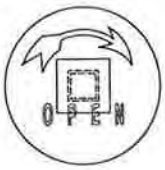

Fig. No. 5050

Valve Operating Key

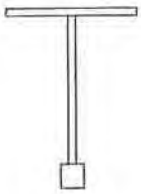

NPP PVC Sewer

PVC GRAVITY SEWER PIPE
ASTM D-3034 PSM
Gasketed Pipe Product Data

Northern Pipe Products PVC Gasketed Sewer Pipe conforms to ASTM D-3034 in sizes 4 through 15 inch and conforms to ASTM F-679 in sizes 18 through 24 inch. 4-inch through 15-inch SDR-35 and 18-inch PS-46 are available with the CSA (Canadian Standards Association) mark of acceptance. All Gasketed Sewer Pipe is manufactured to laying lengths.

ASTM D-3034

Nominal Pipe Size Inches	Pipe O.D. Inches	SDR-35			SDR-26			SDR-23.5		
		Min. Wall Inches	Weight Lbs./Ft.		Min. Wall Inches	Weight Lbs./Ft.		Min. Wall Inches	Weight Lbs./Ft.	
			14' Length	20' Length		14' Length	20' Length		14' Length	20' Length
4	4.215	.120	1.04	1.03	.162	1.38	1.36	.178	1.51	1.50
6	6.275	.180	2.32	2.30	.241	3.08	3.06	.265	3.36	3.34

Note: 4" and 6" diameter SDR 28 with the Canadian Standards Association mark of acceptance is available on special order.

ASTM D-3034

Nominal Pipe Size Inches	Pipe O.D. Inches	SDR-41			SDR-35			SDR-26		
		Min. Wall Inches	Weight Lbs./Ft.		Min. Wall Inches	Weight Lbs./Ft.		Min. Wall Inches	Weight Lbs./Ft.	
			14' Length	20' Length		14' Length	20' Length		14' Length	20' Length
8	8.400	.205	3.59	3.54	.240	4.18	4.13	.323	5.57	5.50
10	10.500	.256	5.61	5.54	.300	6.55	6.46	.404	8.74	8.64
12	12.500	.305	7.96	7.85	.360	9.36	9.22	.481	12.41	12.28
15	15.300	.375	12.03	11.85	.437	13.97	13.75	.588	18.65	18.40

ASTM F-679

Nominal Pipe Size Inches	Pipe O.D. Inches	SDR-35			SDR-26		
		Min. Wall Inches	Weight Lbs./Ft.		Min. Wall Inches	Weight Lbs./Ft.	
			14' Length	20' Length		14' Length	20' Length
18	18.701	.536	21.03	20.70	.720	27.90	27.51
21	22.047	.632	28.50	28.10	.791	38.10	37.40
24	24.803	.711	36.30	35.70	.889	48.40	47.50

Northern Pipe Products PVC Gasketed Sewer Pipe is made with integral bell gasketed joints conforming to ASTM D-3212 (Standard Specification for Joints for Drain and Sewer Plastic Pipes Using Flexible Elastomeric Seals). All gaskets conform to ASTM F-477 (Standard Specification for Elastomeric Seals for Joining Plastic Pipe). Spigot ends are beveled and insertion depths are marked for correct

installation. Northern Pipe Products employs the Rieber Gasket System. The Rieber joining system is a factory made "locked-in" flexible elastomeric seal. The gasket is installed in the bell race during manufacture of the joint. It should not be removed for any reason; destruction of the joint occurs.

PVC GRAVITY SEWER PIPE
ASTM D-3034
Belled End Pipe Product Data

Northern Pipe Products PVC Belled Sewer Pipe is made from compounds conforming to cell class 12454B as defubed in ASTM D-1784 and meets all dimensional and physical specifications of ASTM D-3034. 4-inch through 6-inch is manufactured in 10-foot overall lengths, while 8-inch through 15-inch is 14-foot laying length.

Size	SDR	O.D.	Wall	Wt./Ft.	Length	Ft./Pallet	Ft./T.L.
4"	35	4.215	.120	1.01	10'	630'	20,160'
4"	35	4.215	.120	1.01	20'	1260'	20,160'
4"	26	4.215	.162	1.35	10'	630'	20,160'
6"	35	6.275	.180	2.26	10'	330'	7,920'
6"	35	6.275	.180	2.33	14'	462'	8,316'
6"	26	6.275	.241	3.00	10'	330'	7,920'
8"	35	8.400	.240	4.17	14'	336'	6,048'
10"	35	10.500	.300	6.55	14'	168'/210'	3,402'
12"	35	12.500	.360	9.41	14'	112'	2,688'
15"	35	15.300	.437	14.16	14'	84'	1,512'

PVC DRAINAGE PIPE
ASTM D-2729 PSM
Belled End Pipe Product Data

Size	O.D.	Wall	Wt./Ft.	Length	Ft./Pallet	Ft./T.L.
4"	4.215	.075	.64	10'	630'	20,160'
6"	6.275	.100	1.27	10'	330'	7,920'

PVC PIPE PERFORATION SPECIFICATIONS

PVC DRAINAGE PIPE
ASTM D-2729

Size	O.D.	Wall	Length	Rows of Perforations	Hole Size	Hole Spacing Per Row Inches	Feet Per Pallet
4	4.215	.075	10'	2	5/8	5	630'
6	6.275	.100	10'	2	5/8	5	330'

PVC HIGHWAY UNDERDRAIN
ASTM F-758

Size	O.D.	Wall	Length	Rows of Perforations	Hole Size	Hole Spacing Per Row Inches	Feet Per Pallet
4	4.215	.120	10'	4	1/4	3	630'
6	6.275	.180	10'	4	1/4	3	330'

PVC SDR 35 SEWER PIPE
ASTM D-3034

Size	O.D.	Wall	Length	Rows of Perforations	Hole Size	Hole Spacing Per Row Inches	Feet Per Pallet
4	4.215	.120	10'	2	5/8	5	630'
6	6.275	.180	10'	2	5/8	5	330'

Typical 2-Row Pattern
Conforms to ASTM D-2729

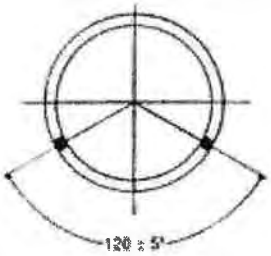

Typical 4-Row Pattern
Conforms to ASTM F-758

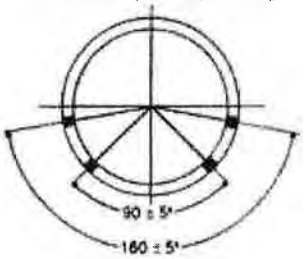

NPP Home Page | Company | Contacts | SiteMap

Please contact our Webmaster with questions or comments.

© Copyright 2007 Northern Pipe. All rights reserved.

SECTION 6900 - WATER MAINS

CITY OF LEE'S SUMMIT, MISSOURI
DESIGN CRITERIA

6901 DESIGN CRITERIA

A. General

1. The design standards presented in the City of Lee's Summit Design Criteria are the minimum standards to be followed in the design and construction of the Lee's Summit water distribution system. These standards are not intended to be used as a substitute for actual construction specifications and design computations.
2. Minimum pipe size: No public water main shall be less than 8 inches in diameter unless otherwise specified in this section.
3. Where water mains are extended into the interior of a lot, the water main shall not be considered a public water main.
4. Main Designations
   - Transmission Mains. Transmission mains are classified as mains transporting water from a water source to a pumping station or reservoir. Transmission mains shall be 16 inches in diameter or larger, and are as shown in the City's currently-adopted Master Plan. Transmission mains shall not be tapped.
   - Major Distribution Mains. Major distribution mains are classified as mains transporting water from a transmission main to a minor distribution main. Major distribution mains shall be all other mains16 inches in diameter or larger, and are as shown in the City's currently adopted Master Plan. Major distribution mains shall only be tapped by minor distribution mains. Connections to major distribution mains shall be made at intervals not less than 1,000 feet.
   - Minor Distribution Mains. Minor distribution mains are classified as water mains 6 to 12 inches in diameter. Six-inch water mains can only be provided at dead end water mains that will not be extended in the future.
5. Grid System: Mains shall be laid on a loop or grid system with mains cross connected not more than 1,000 feet apart. Cross mains to be installed as part of a subdivision or platted lot shall be a minimum of 8 inches in diameter.

B. Capacity

1. The water distribution system and any extension thereof shall have adequate capacity to:
   a. Supply the peak hour demands at maximum day demand (estimated at 0.67 GPM/customer) of all customers, domestic, public, commercial and industrial while maintaining a pressure of not less than 40 pounds per square inch at all points of delivery, without reducing the service to any customer below these requirements.

b. For residential fire protection, the system must be capable of providing adequate fire protection on the day of maximum customer demand (estimated at 0.44 GPM/customer) with a residual pressure of not less than 20 pounds per square inch to at least one point within 300 feet of each building to be served or proposed to be served by such system and extension for residential. For residential buildings in excess of 3,600 square feet (ft^2), the currently-adopted Fire Code shall be followed.

c. For other than residential fire protection, currently-adopted Fire Code shall be followed. Coordinate with the LS Fire Department.

d. The City will evaluate development based on a worst case scenario and how it will impact the systems design.

C. Criteria for Estimating Demand

1. The following criteria will be used in estimating the average day demand, maximum day demand, and peak hour demand incident to the determination of future water main sizes.

   a. Residential population = N = number of dwelling units x 2.78 people/dwelling unit.

   b. Average daily water demand of residential population [gallons per day (gpd)] = R = N x 125 gallons/person.

   c. Average daily commercial and industrial water demand (gpd) = C = number of commercial and industrial employees x 100 gallons/person, plus additional water demand as required for the specific facility.

   d. Average daily school water demand (gpd) = S = number of staff employees and students x 20 gallons/person.

   e. Average daily water demand (gpd) = A = R + C + S.

   f. Maximum daily water demand (gpd) = M = A * Y (Y = The Maximum Day to Average Day ratio as indicated in the City's currently adopted Water Master Plan). The minimum value of the maximum day to average day ratio shall be 2.1.

   g. Peak hour demand (gpd) = P = 2 * M. Gallons per minute (gpm) = P/1440).

2. Required Fire Flows

   a. In general, the following fire flows will be used to evaluate development proposals using the City's water model:

      i. Residential: 1,000 gpm for structures up to 3,600 ft^2

      ii. Commercial (including churches and schools): 1,500 gpm minimum

   b. The Fire Department may require increased fire flows, depending on the building's type of construction, square footage, and use.

3. If determined by City staff that hydraulic modeling is required to determine the effect of new development on the existing water distribution system, then the latest version of the water model adopted by the City of Lee's Summit shall be used. The Design Engineer shall provide data as required for the City to run the model. The Design Engineer/Developer shall be responsible for any costs associated with the hydraulic analysis.

D. Water Mains

1. Location

a. Within or Adjacent to Right of Way: When water mains are placed in or adjacent to the right-of-way (R/W), water mains shall be located as follows:

i. Water mains shall be located at least 4 feet from back of curb with an embankment slope of 3:1 or flatter.

ii. Street crossings shall be bored under existing streets.

iii. All boring excavations shall be located no closer than 2 feet from back of curb and with a minimum depth not less than 42 inches from the finished grade to the top of the water main.

iv. No parallel utilities may be laid in the same trench as the water main.

v. Where sidewalks will be placed on the same side of the street as the water main, the water main shall be located at least four feet from the sidewalk outside the right of way in a utility easement.

b. Away from Right of Way: When placed away from and outside the right of way, water mains shall be located as follows:

i. Water mains shall be installed in easements with an embankment slope of 3:1 or flatter.

ii. Water mains shall not be located in the rear of the property.

iii. Water mains shall be located in the center of the easement.

c. Separation from Other Pipes:

i. Factors: The following factors should be considered in providing adequate separation:

(a) Materials and type of joints for water and sewer pipes.
(b) Soil conditions.
(c) Service and branch connections into the water main and sanitary sewer main.
(d) Compensating variations in the horizontal and vertical connections.
(e) Space for repair and alterations of water and sewer pipes.
(f) Offsetting of pipes around manholes and other sewer structures.

ii. Parallel Installation: Water mains and appurtenant structures shall be laid at least 10 feet horizontally from any existing or proposed sanitary sewer or force main and at least 10 feet horizontally from any storm sewer. The distance shall be measured edge to edge.

iii. Crossings:

(a) Water mains crossing sanitary or storm sewers shall be designed to provide a minimum vertical clear distance of 18 inches between the outside of the water main and the outside of any sanitary sewer and storm sewer. This shall be the case where the water main is either above or below the sewer.

(b) At crossings, a full length of water pipe shall be located such that both joints will be as far from the sewer as possible.

(c) Where conditions prevent the minimum vertical separation set forth above from being maintained, the following shall be applied:

(i) The water main shall be constructed of mechanical or manufactured restrained joint pipe, fusion welded pipe, or cased in a continuous casing that extends no less than ten feet on both sides of the crossing. Casing pipe must be a material that is approved for use as water main.

(ii) Any exception from the minimum vertical clear distance must be submitted to the Missouri Department of Natural Resources for approval.

(d) For DIP water mains crossing other cathodically protected pipe lines, calculations to determine the need for a cathodic protection system for the water main shall be submitted. Cathodic protection system will be designed as required.

(e) Provide special structural support for the pipes as necessary.

(f) Minimum crossing angle shall be 45 degrees.

d. Separation from Structures:

i. Manholes and Other Utility Structures:

(a) No water main shall be located closer than 10 feet horizontally to any part of sewer main or structure.

(b) No water main shall be located closer than 5 feet to any part of a storm sewer curb inlet, junction box, or other storm sewer structure.

ii. Buildings: Water mains shall be at least 15 feet from any building.

iii. Retaining Walls: Water mains shall be located so that maintenance on the water main will not jeopardize the structural integrity of the wall. Location shall comply with Section 5700.

e. Drainage Courses and Streams:

i. The location of water mains relative to drainage courses and streams shall be designed to comply with Section 5600.

ii. Pipelines crossing drainage courses and streams shall be designed to cross as nearly perpendicular as possible.

iii. Pipelines shall be designed to minimize the number of crossings.

iv. Ductile iron pipe (DIP) with restrained joints shall be used for all drainage courses and stream crossings. The DIP shall extend into the bank a minimum of 20 feet at each end of the crossing.

v. Valves shall be provided at both ends of the drainage course crossing (i.e., a minimum of 20 feet into the bank at each end of the crossing) so that the section

can be isolated for testing or repair. The valves shall be easily accessible and not prone to flooding.

vi. The top of all water mains entering or crossing streams shall be at least 42 inches below the natural bottom of the stream bed to protect the pipeline.

vii. All non-bore crossings shall be encased in concrete.

viii. The use of aerial crossings shall not be allowed.

2. Dead End Water Mains

   a. Dead end water mains shall not exceed 700 feet in length.

   b. All dead end water mains that are to be extended in the future shall be installed to the limits of the platted subdivision such that extensions to the mains to serve adjacent subdivision plats may be connected at the plat boundary and shall be installed with an inline valve and a temporary fire hydrant that is properly restrained. The valve shall be the same size as the main.

   c. When a subdivision or platted lot abuts or contains a planned water main as depicted in the City's Master Plan and the subdivision or platted lot will benefit from the main, the Contractor/Developer is responsible for the cost of the water main extension to the plat boundary as described above. Such cost shall be limited to that of an 8-inch main unless a larger main is necessary to serve the development.

   d. All dead end water mains that are not to be extended in the future shall be a minimum 6 inches in diameter between the last two fire hydrants.

   e. All dead end water mains serving a cul-de-sac shall be extended around the cul-de-sac sufficiently far so that no service lines need to be bored more than the width of the normal, non-cul-de-sac street R/W.

3. Thrust Restraint Design

   a. Thrust restraint shall be either restraint joint pipe, thrust blocks, or straddle blocks.

   b. Thrust restraint shall be designed to meet the following criteria:

      i. Design pressure of 250 psi (150 psi working pressure plus 100 psi surge allowance).

      ii. Allowable soil bearing capacity of 1500 pounds per square foot (psf).

      iii. Safety factor of 1.0.

      iv. For horizontal thrust blocks, the minimum and maximum bearing areas are 4.0 and 50.0 square feet (ft^2), respectively.

      v. For vertical (upward) thrust blocks, the minimum and maximum block sizes are 4.0 and 216.0 cubic feet (ft^3), respectively. A unit weight of 140 pounds per cubic foot (pcf) of concrete is assumed.

      vi. For horizontal and vertical thrust restraint details, see the Standard Drawings.

      vii. For water mains 16 inches and larger, straddle blocks shall be used in lieu of thrust blocks. Engineering calculations shall be submitted for approval.

viii. Restrained joint pipe calculations shall comply with the design requirements of the Ductile Iron Pipe Research Association (DIPRA) for ductile iron pipe (DIP) or of the Uni-Bell PVC Pipe Association for polyvinyl chloride (PVC) pipe.

ix. Restrained joint pipe that is designed and manufactured by the same manufacturer as the DIP and PVC pipe shall be used in cul-de-sacs. In the event that the manufacturer of the PVC pipe does not manufacture restrained joint pipe, a joint restraint system acceptable to and approved by the PVC pipe manufacturer shall be used.

c. Temporary Restraint Methods:

i. Retainer glands (e.g., Megalug, Uni-Flange, etc.), Duc-Lugs and all-thread, set screw collars, and field-welded collars are considered short-term restraint. When it is necessary to put the pipeline into service immediately and concrete blocking is utilized, a retainer gland may be installed to provide short-term restraint while the concrete cures.

ii. Gripper gaskets (e.g., Field-Lok, Fast-Grip, etc.) should only be utilized on one side of fittings where field adjustment becomes necessary or it is not possible to lay pipe from both directions.

4. Locating Underground Utilities: Utility marker tape shall be installed above each water main.

5. Trench Design

a. Minimum Cover: A minimum of 42 inches of cover shall be over the top of the pipe. This minimum of cover shall be from the top of the pipe to the finished grade, as shown below:

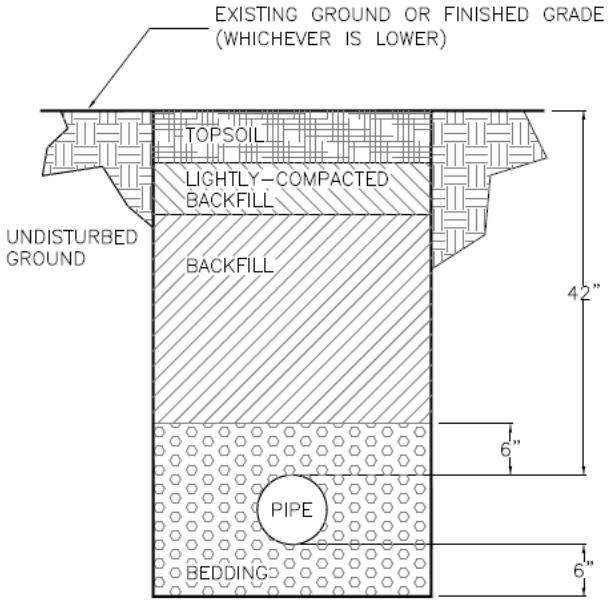

b. Maximum Cover: The maximum cover allowed is 7 feet.

c. Bedding: Bedding aggregate shall be placed from a level 6 inches below the bottom of the pipe to a level 6 inches above the top of the pipe as shown above.

d. Backfill

i. See Paragraph 2102.2.C.2.

ii. Backfill of all pipes under roadways, curb and gutter and all other paved areas within the right of way shall consist of flowable backfill as specified in Section 2602.2.H Mix Design Type A. The flowable fill shall extend to 2 feet from back of curb to 2 feet back of curb, up to 18 inches below finished grade. For existing roadways flowable shall be extend up to the base of pavement.

e. Topsoil: See Paragraph 2102.7.

f. Trench Checks:

iii. Impervious trench checks shall consist of flowable backfill as specified in Paragraph 3901.G, and shall be placed at a maximum spacing of 500 feet. If valves are closer than 500 feet apart on the main so that the section can be isolated, trench checks may be omitted.

iv. Trench check shall extend 12 inches below the bottom of the pipe. Length shall be a minimum of 12 inches and width shall be the width of the trench. The height of the trench check shall extend to 12 inches above the top of the pipe.

g. Conduits: No conduits, pipes or other utilities shall be located in water main trenches.

6. Straddle Blocks

a. Straddle blocks shall be provided as required to restrain piping.

b. Straddle blocks shall also be provided in accordance with the following table:

Percent of Grade	Center to Center Max. Spacing (ft)
20 ≤ Slope < 35	36
35 ≤ Slope <50	24
50 ≤ Slope	16

c. The design criteria for straddle blocks shall be as shown for thrust restraint (see Paragraph 6901.D.3.).

d. Straddle blocks at shorter intervals may be required under extreme conditions as determined by the City Engineer.

e. For straddle block detail, see the Standard Drawings.

7. Pipe Encasement: Pipe encasement, when required and/or permitted, is intended to provide maximum support for pipe in locations where standard embedment may be insufficient. For pipe encasement detail, see the Standard Drawings.

E. Valves

1. Location
   a. Valves on transmission and major distribution mains shall be installed as follows: three valves at every tee, four valves at every cross, and an in-line valve every 1,000 feet as a minimum.
   b. Valves on minor distribution mains shall be installed as follows: two valves at every tee on opposite lines, three valves at every cross, and an in-line valve every 1,000 feet as a minimum.
   c. Valves shall be placed at or near the ends of mains in such a manner that a shutdown can be made for a future main extension without causing loss of service on the existing main.
2. Where fire lines are connected to City water mains, one valve shall be installed on the fire line at the tee. No valves shall be placed on the main when an existing valve in either direction is within 500 feet of the tee. If there are no valves on the main within 500 feet of the tee, then one valve shall be placed on the main on either side of the tee.
3. One valve shall be installed on a single branch fire hydrant unless otherwise required by the City Engineer to improve the ability to isolate an area of the water distribution system in the event of a water main break.
4. The type, size, and location of valves shall be as designated on the approved Engineering Plans.
5. Butterfly Valves:
   a. Butterfly valves shall be provided for all mains 12 inches or larger.
   b. Valves shall be subjected to and pass a one-time pressure test of 192.5 psi prior to delivery. Valves shall be clearly marked to that effect, and the manufacturer shall provide for certification upon delivery of the valves to the site. Certification shall be given to the Inspector.
6. Air release valves shall be provided on all water mains 12 inches and larger. At a minimum, placement shall be at high points and on straight runs at intervals as determined by the Design Engineer. The size and type of the air release valves (combination air valves) shall be as determined by the Design Engineer, meeting the requirement of this manual. Air release valves shall not be connected directly or indirectly to any storm drain, storm sewer, sanitary sewer, or service lateral.

F. Tapping Sleeves and Valves

1. The use of a tapping sleeve and valve is to be minimized and will only be allowed on a case-by-case basis.
2. Design Engineer shall provide justification when proposing the use of a tapping sleeve and valve.
3. Thrust blocks shall be used behind all tapping sleeves and valves.

G. Valves Boxes

1. Valve boxes shall be provided for buried valves.

a. In paved areas these shall be the adjustable screw-type ferrous metal valve boxes.

b. In grassed areas, these valve boxes may be made of AWWA C900 PVC pipe or equivalent.

H. Backflow Prevention

1. Backflow prevention devices (BFPDs) are required on all fire lines, commercial buildings, pump stations, excess flow holding basins, and irrigation systems in accordance with the following table:

Location	Type of BFPD
Fire Line	Double check detector assembly (If chemical additives will be introduced into the fire line, then a reduced pressure principle detector assembly shall be installed unless the chemical additive is isolated by a reduced pressure principle assembly.)
Commercial Building, Pump Station, and Excess Flow Holding Basins	Reduced pressure principle assembly
Irrigation System	Double check valve assembly (If chemical additives will be introduced into the irrigation system, then a reduced pressure principle assembly shall be installed.)

2. On buildings, the backflow prevention systems shall be designed to comply with the City's currently-adopted Plumbing Code, latest edition.

3. When BFPDs are to be installed in a vault, the following considerations apply:

a. The location of the vault shall be such that the pit is located outside of the R/W and easement lines and not in the lowest area. The ground surrounding the vault shall be graded to drain away from the vault.

b. Wall penetrations shall be designed to be as watertight as possible.

c. Steps shall be cast into the wall of the vault.

d. The minimum wall and lid thickness of the vault shall be designed to withstand an AASHTO H-20 loading.

e. The size of the top opening into the vault shall be geared to the size of BFPD used. On larger BFPDs, use a rectangular lid to allow ease of BFPD removal. Opening shall be directly over BFPD.

I. Fire Lines

WATER MAINS

1. Ownership: Where fire lines are installed, a restrained valve shall be installed at the point where the fire line connects to the public water main, which is a water main located within the R/W or public easement. This valve denotes the end of Water Utilities (WU) Operations maintenance and is considered to be publicly owned.
2. When the BFPD is to be installed inside the building, the following apply (see figure below):
   a. The building shall be located no more than 50 feet from the public water main.
   b. The water main from the restrained valve at the public water main to the BFPD shall be considered a private fire line.
   c. The building service line shall not be tapped off the private fire line.
   d. Private fire hydrants shall be installed after the building's BFPD.
   e. Private fire hydrants shall be factory-painted in compliance with Paragraph 3901.P.
   f. The property owner shall be required to maintain the fire line and BFPD.
   g. No private fire line shall be less than four inches in diameter.

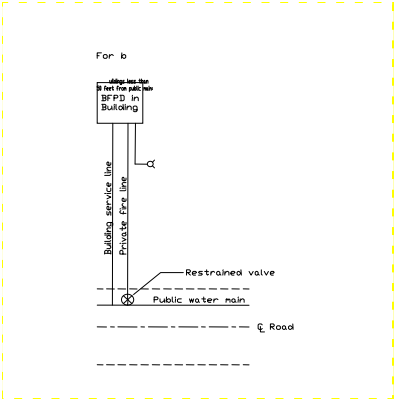

3. For buildings more than 50 feet from the public water main, a BFPD shall be located in a buried vault installed within 5 feet of the R/W line, or utility easement line (if a utility easement line is present), on the private side (see figure below). See Paragraph 6901.H.3.
   a. If the public water main is on the same side of the street as the building, the building service line shall be tapped off the public main.
   b. If the public water main is across the street from the building, the building service line may be tapped off the public main after it crosses the road and before the restrained valve and BFPD on the public side of the R/W or utility easement line.
   c. A public water main shall be constructed of materials as specified in Section 3900 within the R/W. The restrained valve shall be installed at the edge of the R/W or utility easement.

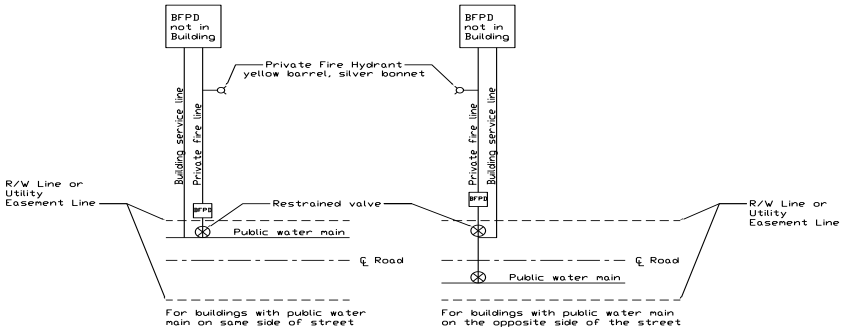

4. Private Fire Lines. Private fire lines, valves, hydrants and BFPD are owned by and are to be maintained by the property owner. For dead end private fire lines, it may be necessary to locate hydrants closer to the building than the existing public hydrants will allow.
5. Post indicator valves (PIV) shall be installed as required by the Fire Department.
   a. All accessible valves on a fire suppression system shall be electronically supervised or secured and locked.
   b. The PIV shall be secured with a suitable, break-away padlock, supplied and accessible by the property owner. A Knox lock box padlock is not required, except in certain circumstances as required by the Fire Chief.

J. Fire Hydrants

1. In water systems and extensions serving one-family and/or two-family residential subdivisions, fire hydrants shall be installed at such locations that there will be at least one fire hydrant within 600 feet hose length (as measured on a drivable surface) to the nearest wall of any building, existing or future. Minimum street length between fire hydrants shall not exceed 500 feet. Hydrants on adjacent streets will not be considered in meeting the above requirements.
2. In commercial, industrial, and apartment house areas, fire hydrants shall be provided so that in no case shall more than 300 feet of fire hose, using an approved route, be required to reach any point at the base of any exterior building wall from the nearest fire hydrant to supply the stipulated fire flow.
3. For public water mains, not more than one fire hydrant shall be located on any 6-inch dead end main. For private fire lines, the size of fire line and number of hydrants shall be designed by a qualified engineer and approved by the City's Fire Department.
4. Fire hydrants shall be located a minimum of 20 feet from the points of curvature of the curb return.
5. To the extent practicable, fire hydrants should be located at property lines between lots.

6. Fire hydrants shall be factory painted in accordance with the colors shown in Paragraph 3901.P.
7. For public water mains along streets without curbs, the fire hydrants shall either be placed within one foot of the R/W line or the fire hydrant should not be more than 10 feet from the edge of pavement. No fire hydrant shall be placed in the bottom of a ditch.

K. Service Lines

1. Service lines extending from the water main to the water meter are public. Service lines extending from the water meter to the building are private. Service lines shall be at least 10 feet from sanitary sewer manholes and at least 5 feet from storm sewer structures.
2. The service line from the water main to the water meter should be ¾, 1, 2, or 3 inch diameter.
3. Services shall be connected with corporation stops for 2-inch and smaller service lines and with a cut-in tee and appropriate valving for larger sizes.
4. An irrigation sprinkler system and its required BFPD shall be tied to the service line outside of the meter well on the customer's side of the meter. Alternatively, a sprinkler system and its required BFPD may be tapped to the public water main. However, this requires payment of a separate tap fee and installation of a separate meter.
5. No splices or fittings (e.g., flared copper coupling, pack joint coupling, 3-part union/coupling, etc.) shall be allowed between the water main and the meter.
6. Any splices between the meter and the customer shall comply with the City's currently-adopted Plumbing Code, latest edition.
7. Each individual residential or business unit, except apartments, shall have separate meters and service lines. The number of connections shall comply with the City's Code of Ordinances, Section 32-61, Paragraph A.
8. Service lines shall not be laid parallel to the R/W or run continuously within the R/W.
9. Soft type "K" copper service line (diameter in accordance with the City standard details) shall extend a minimum of 10 feet beyond the meter well (between the meter and the private customer).

L. Water Meters

1. The water meter shall be located in the R/W or easement within 1 foot of the R/W or easement line.
   a. Two inch and smaller meters shall be set in a minimum 5-foot by 5-foot easement or in the R/W.
   b. Three-inch and larger meters shall be located in a vault. An easement extending at least 10 feet around the vault and including the vault shall be provided. If the vault is not located adjacent to the R/W, a 15-foot wide access easement shall be provided to the easement. Easement shall be sufficiently large to provide parking space for a vehicle.

2. Water meters must be located outside of paved areas, including sidewalks, unless otherwise approved by the City Engineer. In the event that the meter must be installed in a paved area, the Engineer shall submit plans for a traffic-bearing meter well and lid. The Contractor/Developer shall pay for the additional costs associated with traffic-bearing meter well and lid for any meters placed in paved areas.
3. The top of the meter shall be 14-18 inches below the water meter lid.
4. Each individual residential or business unit, except apartments, shall have separate meters and service lines. The number of connections shall comply with the City's Code of Ordinances, Section 32-61, Paragraph A. Double setters are acceptable.

M. Casing Pipe

1. Casing pipe is required on all bores except service lines 2 inches and smaller.
2. Casing Spacers: Stainless steel casing spacers in a centered configuration with manufactured end seals shall be used.
3. Extent: The extent of the casing pipe shall be as shown below. Consideration shall be given for future road widening.

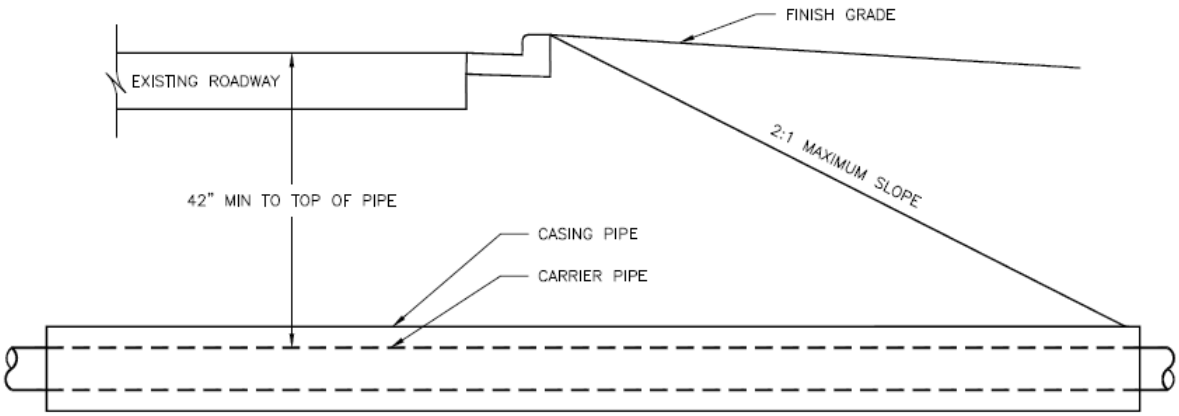

NOTE:
BOTH ENDS OF CASING PIPE SHALL BE PLUGGED USING ONE OF THE METHODS LISTED IN THE STANDARD SPECIFICATIONS

N. Easements

1. Unified Development Ordinance (UDO): Easements shall be provided in accordance with the requirements of the City's UDO, Article 16. In addition, the following guidelines shall be followed:
   a. Easements shall be a minimum of 10 feet wide when adjacent to the R/W.
   b. Easements shall be a minimum of 15 feet wide when detached from the R/W (i.e. between buildings or across undeveloped areas), where the additional 5 feet are needed and additional access necessary to drive equipment in to perform a repair.

c. For deep installations (i.e. greater than 7 feet deep), easements shall be a minimum of 2 feet wide for every foot of trench depth.

d. Easements shall be a minimum of 15 feet wide around the bulb of the cul-de-sac adjacent to the right-of-way.

2. Temporary construction easements shall be acquired as necessary to complete the installation of the project.

3. Legal Descriptions: Legal descriptions shall include drawings indicating the point of commencement, the point of beginning, line bearings, line distances, the ending point, and the area described. The drawings shall be on letter size paper. Legal descriptions and drawings shall be sealed by a Land Surveyor registered in the State of Missouri and meet the filing requirements of Jackson and/or Cass County. All documentation shall be formatted to meet the requirements of the County Recorder. Aerial photographs shall not be used in the background of the drawing.

4. Water Mains Extending beyond Platted Areas: In the event that a water main needs to extend beyond the platted area of a development, proposed easements shall be provided for the main(s) prior to receiving approval of the Engineering Plans.

DIVISION III
STANDARD DRAWINGS

AMERICAN PUBLIC WORKS ASSOCIATION
KANSAS CITY METROPOLITAN CHAPTER

TABLE OF CONTENTS

DRAWING NUMBER	DESCRIPTION	LATEST REVISION
ESC-01	TEMPORARY CONSTRUCTION ENTRANCE	04/22/03
ESC-02	SODDING	04/22/03
ESC-03	SODDED WATERWAYS	04/22/03
ESC-04	EROSION CONTROL BLANKET - 1	04/22/03
ESC-05	EROSION CONTROL BLANKET - 2	04/22/03
ESC-06	TURF REINFORCEMENT MAT SLOPE INSTALLATION	04/22/03
ESC-07	TURF REINFORCEMENT MAT CHANNEL INSTALLATION	04/22/03
ESC-08	STAKES, STAPLES, AND PINS	04/22/03
ESC-09	STAPLE PATTERNS FOR ROLLED EROSION CONTROL PRODUCTS	04/23/03
ESC-10	SEDEIMENT FENCE	04/23/03
ESC-11	SEDIMENT FENCE INSTALLATION SLICING METHOD	04/23/03
ESC-12	SUPER SEDIMENT FENCE	04/23/03
ESC-13	STRAW BALE BARRIER	04/23/03
ESC-14	COMPOST BERM	04/23/03
ESC-15	ROCK CHECK DAM	04/23/03
ESC-16	TRIANGULAR SILT DIKE™	04/23/03
ESC-17	GEO-RIDGE®	04/23/03
ESC-18	SILT SAVER®	04/23/03
ESC-19	SEDIMENT FENCE DROP INLET PROTECTION	04/23/03
ESC-20	GRAVEL AND WIRE MESH DROP INLET SEDIMENT TRAP	04/23/03
ESC-21	BLOCK AND GRAVEL DROP INLET SEDIMENT TRAP	04/23/03
ESC-22	EXCAVATED DROP INLET SEDIMENT TRAP	04/23/03
ESC-23	SOD DROP INLET SEDIMENT TRAP	04/23/03
ESC-24	GRAVEL CURB INLET SEDIMENT TRAP	04/23/03
ESC-25	WOODEN WEIR CURB INLET PROTECTION	04/23/03
ESC-26	BLOCK AND GRAVEL CURB INLET PROTECTION	04/23/03
ESC-27	CULVERT INLET SEDIMENT TRAP	04/23/03
ESC-28	SEDIMENT FENCE CULVERT INLET PROTECTION	04/23/03
ESC-29	DIVERSIONS	04/23/03
ESC-30	TRAPEZOIDAL GRASS-LINED CHANNEL	04/23/03
ESC-31	INFILTRATION TRENCH	04/23/03
ESC-32	TEMPORARY SLOPE DRAIN	04/23/03
ESC-33	TEMPORARY SEDIMENT TRAP	04/23/03
ESC-34	ANTI-SEEP COLLAR	04/23/03
ESC-35	DETENTION/INFILTRATION BASIN	04/23/03
ESC-36	DIVERSION CHANNEL CROSSING	04/23/03
ESC-37	FLUME PIPE CROSSING	04/23/03
ESC-38	COFFERDAM CROSSING	04/23/03
ESC-39	TEMPORARY CULVERT CROSSING	04/23/03
ESC-40	TEMPORARY BRIDGE CROSSING	04/23/03
ESC-41	STRAW BALE/SEDIMENT FENCE PIT	04/23/03
ESC-42	DEWATER BOX	04/23/03
ESC-43	DIRT BAG®	04/23/03
ESC-44	TURBIDITY CURTAIN	04/23/03
ESC-45	TRUBIDITY CURTAIN INSTALLATIONS	04/23/03

J:\KCMOAPWA\27787\CIVIL\details\draft 4-22-03\division III\ESC-COVER2.dwg 04-23-2003 14:24 JRA

TEMPORARY CONSTRUCTION ENTRANCE

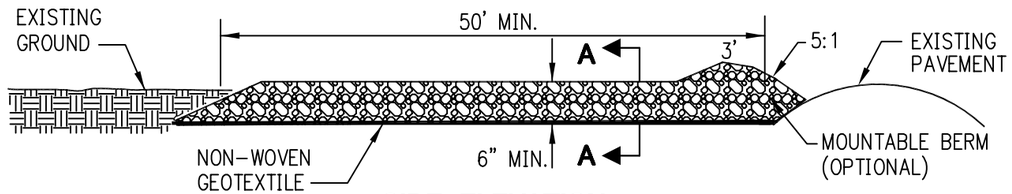

SIDE ELEVATION
NOT TO SCALE

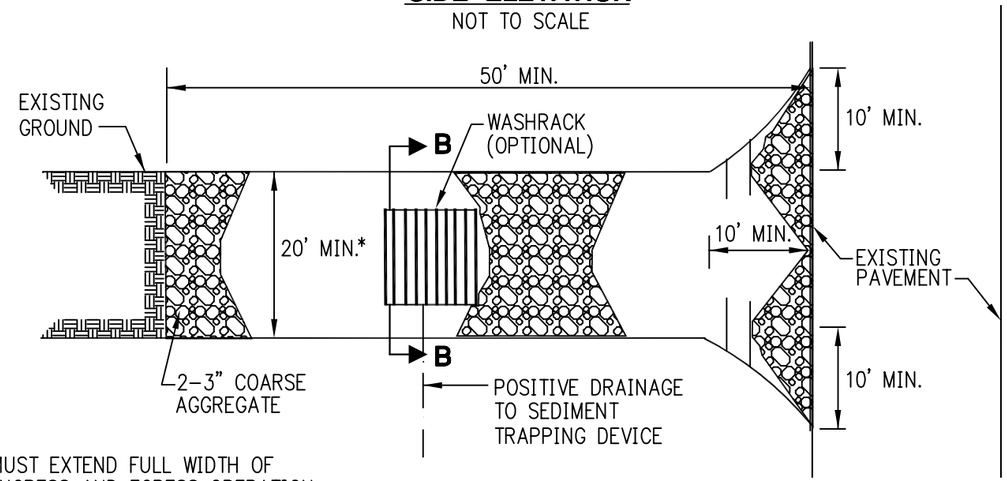

* MUST EXTEND FULL WIDTH OF INGRESS AND EGRESS OPERATION

PLAN VIEW
NOT TO SCALE

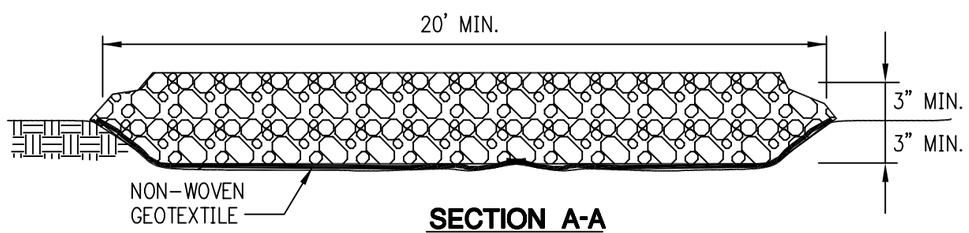

SECTION A-A
NOT TO SCALE

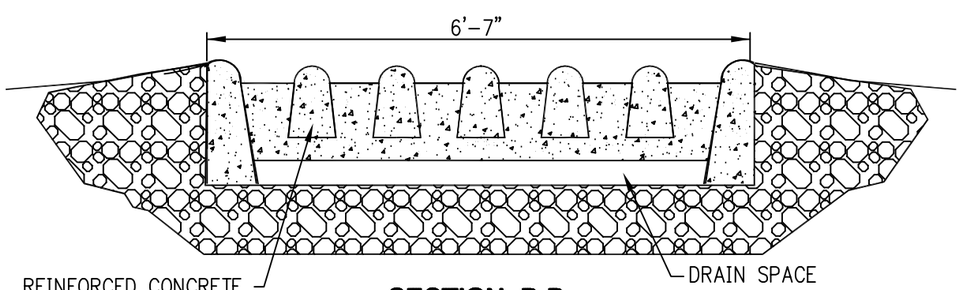

SECTION B-B
NOT TO SCALE

SOURCE: MODIFIED FROM VA. DCR, 1992

TEMPORARY CONSTRCUTION ENTRANCE PAD NOTES:

A) INSTALLATION:

1. AVOID LOCATING ON STEEP SLOPES OR AT CURVES ON PUBLIC ROADS. IF POSSIBLE, LOCATE WHERE PERMANENT ROADS WILL EVENTUALLY BE CONSTRUCTED.
2. REMOVE ALL VEGETATION AND OTHER UNSUITABLE MATERIAL FROM THE FOUNDATION AREA, GRADE, AND CROWN FOR POSITIVE DRAINAGE.
3. IF SLOPE TOWARDS THE PUBLIC ROAD EXCEEDS 2%, CONSTRUCT A 6-TO 8-INCH HIGH RIDGE WITH 3H:1V SIDE SLOPES ACROSS THE FOUNDATION APPROXIMATELY 15 FEET FROM THE EDGE OF THE PUBLIC ROAD TO DIVERT RUNOFF AWAY FROM IT.
4. INSTALL PIPE UNDER THE ENTRANCE IF NEEDED TO MAINTAIN DRAINAGE DITCHES ALONG PUBLIC ROADS.
5. PLACE STONE TO DIMENSIONS AND GRADE AS SHOWN ON PLANS. LEAVE SURFACE SMOOTH AND SLOPED FOR DRAINAGE.
6. DIVERT ALL SURFACE RUNOFF AND DRAINAGE FROM THE ENTRANCE TO A SEDIMENT CONTROL DEVICE.
7. IF WET CONDITIONS ARE ANTICIPATED, PLACE GEOTEXTILE FABRIC ON THE GRADED FOUNDATION TO IMPROVE STABILITY.

B) TROUBLESHOOTING:

1. CONSULT WITH A QUALIFIED DESIGN PROFESSIONAL IF ANY OF THE FOLLOWING OCCUR:
   a. INADEQUATE RUNOFF CONTROL TO THE EXTENT THAT SEDIMENT WASHES ONTO PUBLIC ROAD – INSTALL DIVERSIONS OR OTHER RUNOFF CONTROL MEASURES.
   b. SMALL STONE, THIN PAD, OR ABSENCE OF GEOTEXTILE FABRIC RESULTS IN RUTS AND MUDDY CONDITIONS AS STONE IS PRESSED INTO SOIL – INCREASE STONE SIZE OR PAD THICKNESS OR ADD GEOTEXTILE FABRIC.
   c. PAD TOO SHORT FOR HEAVY CONSTRUCTION TRAFFIC – EXTEND PAD BEYOND THE MINIMUM 50-FOOT LENGTH AS NECESSARY.

C) INSPECTION AND MAINTENANCE:

1. INSPECT STONE PAD AND SEDIMENT DISPOSAL AREA WEEKLY AND AFTER 1/2-INCH OR GREATER STORM EVENTS.
2. RESHAPE PAD AS NEEDED FOR PROPER DRAINAGE AND RUNOFF CONTROL.
3. TOPDRESS WITH CLEAN 2-AND 3-INCH STONE AS NEEDED.
4. IMMEDIATELY REMOVE MUD OR SEDIMENT TRACKED OR WASHED ONTO PUBLIC ROAD. REPAIR ANY BROKEN ROAD PAVEMENT IMMEDIATELY.
5. REMOVE ALL TEMPORARY ROAD MATERIALS FROM AREAS WHERE PERMANENT VEGETATION WILL BE ESTABLISHED.

AMERICAN PUBLIC WORKS ASSOCIATION	
APWA	KANSAS CITY METROPOLITAN CHAPTER
TEMPORARY CONSTRUCTION ENTRANCE	STANDARD DRAWING NUMBER ESC-01 ADOPTED:

J:\KCMOAPWA\27787\CIVIL\details\draft 4-22-03\division III\ESC-01.DWG 04-22-2003 15:38 JRA

SODDING

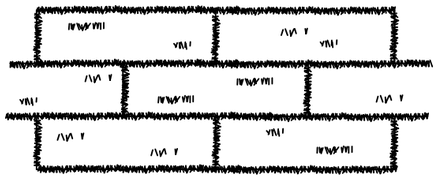

LAY SOD IN A STAGGERED PATTERN. BUTT THE STRIPS TIGHTLY AGAINST EACH OTHER. DO NOT LEAVE SPACES AND DO NOT OVERLAP. A SHARPENED MASON'S TROWEL IS A HANDY TOOL FOR TUCKING DOWN THE ENDS AND TRIMMING PIECES.

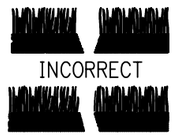

INCORRECT

CORRECT

BUTTING – ANGLED ENDS CAUSED BY THE AUTO-MATIC SOD CUTTER MUST BE MATCHED CORRECTLY.

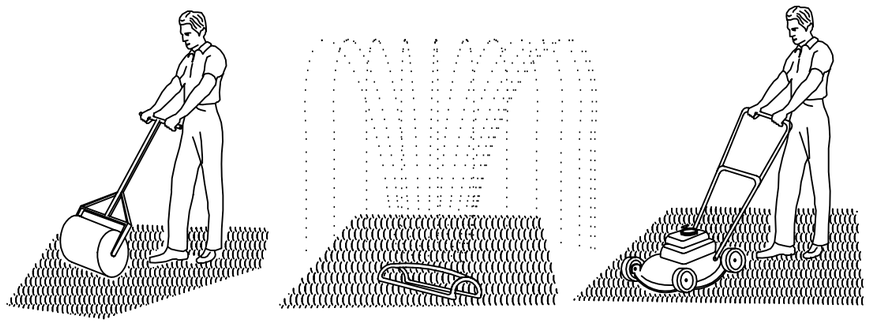

ROLL SOD IMMEDIATELY TO ACHIEVE FIRM CONTACT WITH THE SOIL.

WATER TO A DEPTH OF 4" AS NEEDED. WATER WELL AS SOON AS THE SOD IS LAID.

MOW WHEN THE SOD IS ESTABLISHED, TYPICALLY IN 2-3 WEEKS. SET THE MOWER AT 2 TO 3 INCHES HIGH.

SODDING NOTES:

A) SODDING:

1. THE SOD SHALL BE DENSELY ROOTED, NURSERY GROWN, AND A PERENNIAL GRASS. THE SOD SHALL CONTAIN A GROWTH OF NOT MORE THAN 10 PERCENT OF OTHER GRASSES, SHALL BE FREE FROM ALL PROHIBITED AND NOXIOUS WEEDS, AND SHALL BE CUT IN STRIPS OF UNIFORM THICKNESS. THE RANGE OF ACCEPTABLE THICKNESS SHALL BE 1/2 TO 1 1/2 INCH, WITH EACH STRIP CONTAINING AT LEAST ONE (1) SQUARE YARD. SOD SHALL BE CUT IN STRIPS NOT LESS THAN 12 INCHES WIDE.
2. FERTILIZER SHALL BE INORGANIC 12-12-12 OR 13-13-13 GRADE, UNIFORM IN COMPOSITION, FREE FLOWING, SUITABLE FOR APPLICATION WITH APPROVED EQUIPMENT, AND DELIVERED TO THE SITE IN CONVENIENT CONTAINERS, EACH FULLY LABELED. LABELS SHALL CONFORM TO APPLICABLE STATE FERTILIZER LAWS AND BEARING THE NAME, TRADE NAME OR TRADEMARK, AND WARRANTY OF THE PRODUCER.
3. BEFORE TILLING OPERATIONS, FERTILIZER SHALL BE SPREAD UNIFORMLY AT THE RATE OF 300 POUNDS PER ACRE. FERTILIZING RATE IS EQUIVALENT TO 3.5 POUND PER 500 SQUARE FEET.
4. THE SOD BED SHALL HAVE A UNIFORM SURFACE FREE FROM WASHES AND DEPRESSIONS. IT SHALL CONFORM TO THE FINISHED GRADE PROFILE AND CROSS SECTION SHOWN ON THE PLANS. THE SOIL, EXCEPT WHERE FRESH TOP SOIL HAS BEEN APPLIED AND COMPACTED, SHALL BE THOROUGHLY TILLED TO A DEPTH OF 2 INCHES.
5. FRESHLY GRADED AREAS WHICH HAVE SET LONG ENOUGH TO BECOME DRY AND CRUSTED OVER SHALL BE TILLED, AS SPECIFIED ABOVE, BEFORE PLACING THE SOD.
6. SOD SHALL NOT BE PLACED DURING A DROUGHT NOR ON FROZEN GROUND UNLESS AUTHORIZED BY THE ENGINEER.
7. SOD SHALL BE MOIST WHEN IT IS PLACED. SOD STRIPS SHALL BE LAID ALONG CONTOUR LINES, COMMENCING AT THE LOWEST POINT OF THE AREA AND WORKING UPWARD. THE TRANSVERSE JOINTS OF SOD STRIPS SHALL BE STAGGERED AND THE SOD CAREFULLY PLACED TO PRODUCE TIGHT JOINTS. THE SOD SHALL BE FIRMED AND WATERED IMMEDIATELY AFTER IT IS PLACED. THE FIRMING SHALL BE ACCOMPLISHED BY APPLICATION OF A ROLLER WEIGHING BETWEEN 60 AND 90 POUNDS PER LINEAL FOOT OF ROLLER.
8. ON 2H:1V SLOPES OR STEEPER THE SOD SHALL BE ANCHORED WITH 1/2-INCH SQUARE BY 8-INCH LONG WOODEN PEGS DRIVEN INTO THE GROUND, 3 PEGS TO THE SQUARE YARD OR OTHER APPROVED CONFIGURATION. PEGGING SHALL BE DONE IMMEDIATELY AFTER SOD IS FIRMED. THE AREA SHALL THEN BE CLEARED OF LOOSE SOD, EXCESS OR BROKEN ANCHORS, EXCESSIVE SOIL, AND OTHER FOREIGN MATERIALS.

APPEARANCE OF GOOD SOD

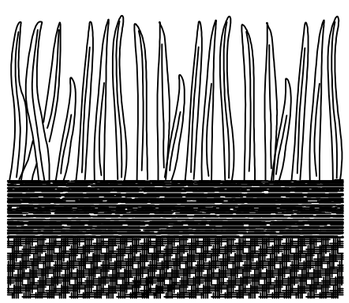

SHOOTS – GRASS BLADES SHOULD BE GREEN AND HEALTHY, MOWED AT A 2"-3" CUTTING HEIGHT.

THATCH – GRASS CLIPPINGS AND DEAD LEAVES, UP TO 1/2" THICK.

ROOT ZONE – SOIL AND ROOTS SHOULD BE 1/2"-3/4" THICK, WITH DENSE ROOT MAT FOR STRENGTH.

B) TROUBLESHOOTING:

1. CONSULT WITH A QUALIFIED DESIGN PROFESSIONAL IF ANY OF THE FOLLOWING OCCUR:
   a. VARIATION IN TOPOGRAPHY ON SITE INDICATE THE SODDING MATERIALS WILL NOT FUNCTION AS INTENDED; CHANGES IN PLAN MAY BE NEEDED.
   b. DESIGN SPECIFICATIONS FOR SOD VARIETY CANNOT BE MET OR IRRIGATION IS NOT POSSIBLE; SUBSTITUTION OR SEEDING MAY BE REQUIRED. UNAPPROVED SUBSTITUTIONS COULD RESULT IN EROSION OR SODDING FAILURE.
2. COMMON PROBLEMS:
   a. SOD LAID ON POORLY PREPARED SOIL OR UNSUITABLE SURFACE DIES BECAUSE IT IS UNABLE TO ROOT – REMOVE DEAD SOD, PREPARE SURFACE, AND RESOD.
   b. SOD NOT ADEQUATELY IRRIGATED AFTER INSTALLATION CAUSES ROOT DIEBACK, GRASS TO NOT ROOT RAPIDLY, AND DRYING OUT – IRRIGATE SOD AND UNDERLYING SOIL TO THE DEPTH OF 4 INCHES AND KEEP MOIST UNTIL ROOTS ARE ESTABLISHED.
   c. SOD NOT ANCHORED PROPERLY IS LOOSENED BY RUNOFF – REPLACE DAMAGED AREAS AND ANCHOR SOD.
   d. SLOW GROWTH DUE TO LACK OF NITROGEN CAUSES YELLOWING OF LEAF BLADES – REFERTILIZE SOD, BUT AVOID FERTILIZING COOL SEASON GRASSES FROM LATE MAY THROUGH JULY.

C) MAINTENANCE AND INSPECTION:

1. THE SODDED AREA SHALL BE THOROUGHLY WATERED DAILY FOR A PERIOD OF FIFTEEN DAYS AFTER PLACING EXCEPT WHEN THOROUGHLY WETTED BY RAIN. ANY PORTION OF THE SOD THAT IS NOT IN GOOD GROWING CONDITION FOLLOWING THE FIRST FULL GROWING SEASON (SPRING TO FALL), SHALL BE REPLACED WITH FRESH LIVE SOD.

SOURCE: MODIFIED FROM VA. DCR, 1992

AMERICAN PUBLIC WORKS ASSOCIATION		
APWA	KANSAS CITY METROPOLITAN CHAPTER	
SODDING	STANDARD DRAWING NUMBER ESC-02	
	ADOPTED:	

J:\KCMOAPWA\27787\CIVIL\details\draft 4-22-03\division III\ESC-02.DWG 04-22-2003 16:06 JRA

SODDED WATERWAYS

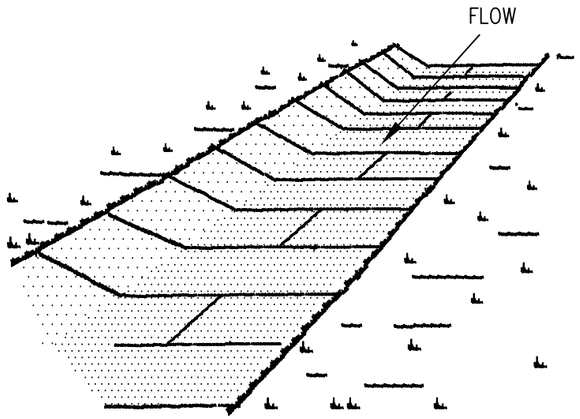

NOTE:
LAY SOD ACROSS THE DIRECTION OF FLOW.

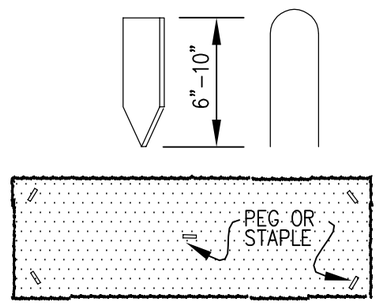

NOTE:
USE PEGS OR STAPLES TO FASTEN SOD FIRMLY – AT THE ENDS OF STRIPS AND IN THE CENTER, OR EVERY 3–4 FEET IF THE STRIPS ARE LONG. WHEN READY TO MOW, DRIVE PEGS OR STAPLES FLUSH WITH THE GROUND.

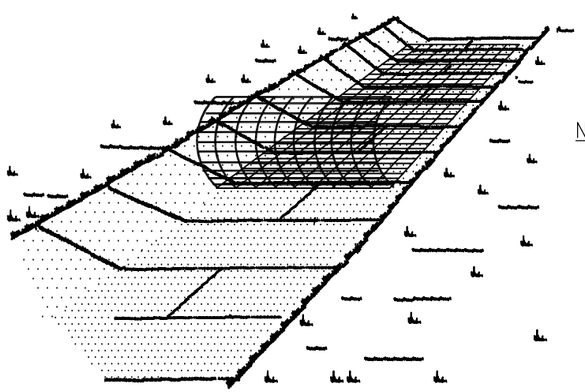

NOTE:
IN CRITICAL AREAS, SECURE SOD WITH NETTING. USE STAPLES.

SODDED WATERWAYS NOTES:

A) INSTALLATION:

1. LAY SOD IN A STAGGERED PATTERN. BUTT THE STRIPS TIGHTLY AGAINST EACH OTHER. DO NOT LEAVE SPACES AND DO NOT OVERLAP.
2. CARE SHOULD BE TAKEN TO PREPARE THE SOIL ADEQUATELY IN ACCORDANCE WITH THE SODDING SPECIFICATIONS ON ESC–02.
3. SOD STRIPS IN WATERWAYS SHALL BE LAID PERPENDICULAR TO THE DIRECTION OF FLOW. CARE SHOULD BE TAKEN TO BUTT ENDS OF STRIPS TIGHTLY.
4. AFTER ROLLING OR TAMPING, SOD SHALL BE PEGGED OR STAPLED TO RESIST WASHOUT DURING THE ESTABLISHMENT PERIOD. JUTE MESH OR OTHER NETTING MAY BE PEGGED OVER THE SOD FOR EXTRA PROTECTION IN CRITICAL AREAS.
5. ALL OTHER SODDING SPECIFICATIONS SHALL BE ADHERED TO WHEN SODDING A WATERWAY.

B) TROUBLESHOOTING:

1. CONSULT WITH A QUALIFIED DESIGN PROFESSIONAL IF ANY OF THE FOLLOWING OCCUR:
   a. VARIATION IN TOPOGRAPHY ON SITE INDICATE THE SODDING MATERIALS WILL NOT FUNCTION AS INTENDED; CHANGES IN PLAN MAY BE NEEDED.
   b. DESIGN SPECIFICATIONS FOR SOD VARIETY CANNOT BE MET OR IRRIGATION IS NOT POSSIBLE; SUBSTITUTION OR SEEDING MAY BE REQUIRED. UNAPPROVED SUBSTITUTIONS COULD RESULT IN EROSION OR SODDING FAILURE.
2. COMMON PROBLEMS:
   a. SOD LAID ON POORLY PREPARED SOIL OR UNSUITABLE SURFACE DIES BECAUSE IT IS UNABLE TO ROOT – REMOVE DEAD SOD, PREPARE SURFACE, AND RESOD.
   b. SOD NOT ADEQUATELY IRRIGATED AFTER INSTALLATION CAUSES ROOT DIEBACK GRASS TO NOT ROOT RAPIDLY, AND DRYING OUT – IRRIGATE SOD AND UNDERLYING SOIL TO THE DEPTH OF 4 INCHES AND KEEP MOIST UNTIL ROOTS ARE ESTABLISHED.
   c. SOD NOT ANCHORED PROPERLY IS LOOSENED BY RUNOFF – REPLACE DAMAGED AREAS AND ANCHOR SOD.
   d. SLOW GROWTH DUE TO LACK OF NITROGEN CAUSES YELLOWING OF LEAF BLADES – REFERTILIZE SOD, BUT AVOID FERTILIZING COOL SEASON GRASSES FROM LATE MAY THROUGH JULY.

C) MAINTENANCE & INSPECTION:

1. KEEP SOD MOIST UNTIL IT IS FULLY ROOTED.
2. MOW TO A HEIGHT OF 2 TO 3 INCHES AFTER SOD IS WELL–ROOTED, IN 2 TO 3 WEEKS. DO NOT REMOVE MORE THAN 1/3 OF THE LEAF BLADES IN ANY MOWING.
3. PERMANANT, FINE TURF AREAS REQUIRE YEARLY FERTILIZATION. FERTILIZE WARM–SEASON GRASS IN LATE SPRING TO EARLY SUMMER; COOL–SEASON GRASS IN LATE WINTER AND AGAIN IN EARLY FALL.

SOURCE: MODIFIED FROM VA. DCR, 1992

AMERICAN PUBLIC WORKS ASSOCIATION	
APWA	KANSAS CITY METROPOLITAN CHAPTER
SODDED WATERWAYS	STANDARD DRAWING NUMBER ESC–03 ADOPTED:

J:\KCMOAPWA\27787\CIVIL\details\draft 4-22-03\division III\ESC-03.DWG 04-22-2003 16:14 JRA

EROSION CONTROL BLANKET

SHALLOW SLOPE

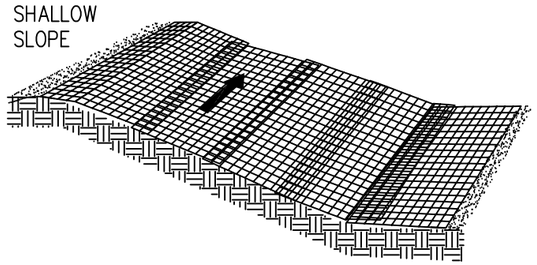

NOTE:
ON SHALLOW SLOPES, PROTECTIVE EROSION CONTROL BLANKETS MAY BE APPLIED ACROSS THE SLOPE.

NOTE:
WHERE THERE IS A BERM AT THE TOP OF THE SLOPE, BRING THE MATERIAL OVER THE BERM AND ANCHOR IT BEHIND THE BERM.

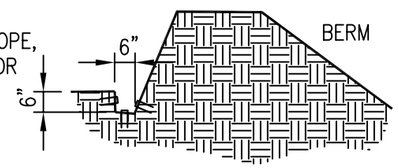

STEEP SLOPE

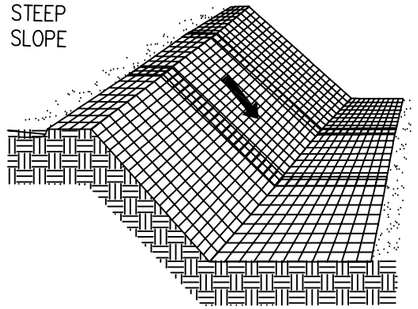

NOTE:
ON STEEP SLOPES, APPLY PROTECTIVE BLANKET PERPENDICULAR TO THE DIRECTION OF FLOW AND ANCHOR SECURELY.

NOTE:
BRING MATERIAL DOWN TO A LEVEL AREA BEFORE TERMINATING THE INSTALLATION.

TOP OF SLOPE BLANKET ANCHOR SLOT

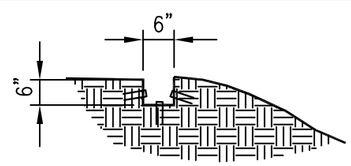

DITCH

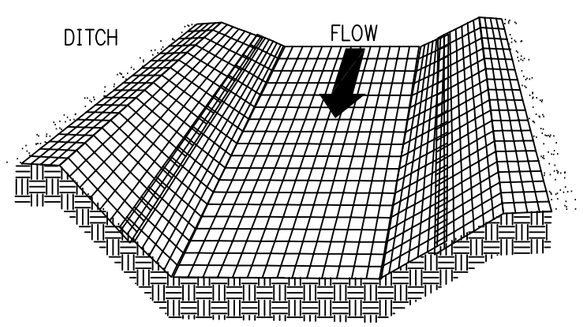

NOTE:
IN DITCHES, APPLY PROTECTIVE COVERING PARALLEL TO THE DIRECTION OF FLOW. USE CHECK SLOTS AS REQUIRED. AVOID JOINING MATERIAL IN THE CENTER OF THE DITCH IF AT ALL POSSIBLE. FOLLOW BLANKET MANUFACTURER'S RECOMMENDATIONS FOR ALLOWABLE VELOCITY AND SHEAR STRESS.

EROSION CONTROL BLANKET NOTES (1 OF 2):

A) SITE PREPARATION:

AFTER SITE HAS BEEN SHAPED AND GRADED, PREPARE A FRIABLE SEEDBED RELATIVELY FREE FROM CLODS AND ROCKS MORE THAN 1 1/2 INCHES IN DIAMETER AND ANY FOREIGN MATERIAL THAT WILL PREVENT UNIFORM CONTACT OF THE PROTECTIVE COVERING WITH THE SOIL SURFACE.

B) PLANTING:

LIME, FERTILIZE, AND SEED IN ACCORDANCE WITH SEEDING OR PLANTING PLAN. WHEN USING JUTE MESH ON A SEEDED AREA, APPLY APPROXIMATELY ONE HALF THE SEED AFTER LAYING THE MAT. THE PROTECTIVE COVERING CAN BE LAID OVER SPRIGGED AREAS WHERE SMALL GRASS PLANTS HAVE BEEN INSERTED INTO THE SOIL. WHERE GROUND COVERS ARE TO BE PLANTED, LAY THE PROTECTIVE COVERING FIRST AND THEN PLANT THROUGH THE MATERIAL AS PER PLANTING PLAN.

C) LAYING AND STAPLING:

IF INSTRUCTIONS HAVE BEEN FOLLOWED, ALL NEEDED CHECK SLOTS WILL HAVE BEEN INSTALLED, AND THE PROTECTIVE COVERING WILL BE LAID ON A FRIABLE SEEDBED FREE FROM CLODS, ROCKS, ROOTS, ETC. THAT MIGHT IMPEDE GOOD CONTACT.

1. START LAYING THE PROTECTIVE COVERING FROM THE TOP OF THE CHANNEL OR SLOPE AND UNROLL DOWN-GRADE. ALLOW TO LAY LOOSELY ON SOIL; DO NOT STRETCH.
2. UPSLOPE ENDS OF THE BLANKET SHOULD BE BURIED IN AN ANCHOR SLOT NO LESS THAN 6-INCHES DEEP. TAMP EARTH
3. FIRMLY OVER THE MATERIAL. WHEN TOP IS RELATIVELY FLAT, EXTEND BLANKET ABOUT 40 INCHES AWAY FROM SLOPE. STAPLE THE MATERIAL AT A MINIMUM OF EVERY 12 INCHES ACROSS THE TOP END.
4. EDGES OF THE MATERIAL SHALL BE STAPLED EVERY 3 FEET. WHERE MULTIPLE WIDTHS ARE LAID SIDE BY SIDE, THE ADJACENT EDGES SHALL BE OVERLAPPED A MINIMUM OF 6 INCHES AND STAPLED TOGETHER.
5. STAPLES SHALL BE PLACED DOWN THE CENTER, STAGGERED WITH THE EDGES AT 3-FOOT INTERVALS.

D) TROUBLESHOOTING:

CONSULT WITH A QUALIFIED DESIGN PROFESSIONAL, IF ANY OF THE FOLLOWING OCCUR:

1. MOVEMENT OF THE BLANKET OR EROSION UNDER THE BLANKET IS OBSERVED.
2. VARIATIONS IN TOPOGRAPHY ON SITE INDICATE EROSION CONTROL MAT WILL NOT FUNCTION AS INTENDED; CHANGES IN PLAN MAY BE NEEDED, OR A BLANKET WITH A SHORTER OR LONGER LIFE MAY BE NEEDED.
3. DESIGN SPECIFICATIONS FOR SEED VARIETY, SEEDING DATES, OR EROSION CONTROL MATERIALS CANNOT BE MET; SUBSTITUTION MAY BE REQUIRED. UNAPPROVED SUBSTITUTIONS COULD RESULT IN FAILURE TO ESTABLISH VEGETATION.

E) MAINTENANCE & INSPECTION

INSPECT CONTROLS AFTER EACH RAIN EVENT OF 1/2 INCH OR GREATER, AND EVERY 7 DAYS UNTIL VEGETATION IS ESTABLISHED, FOR EROSION OR UNDERMINING BENEATH THE NETTING, BLANKETS, OR MATS. IF ANY AREA SHOWS EROSION, PULL BACK THAT PORTION OF THE MATERIAL, ADD SOIL, TAMP DOWN, AND RESEED; RESECURE THE MATERIAL IN PLACE. IF NETTING, BLANKETS OR MATS BECOME DISLOCATED OR DAMAGED, REPAIR OR REPLACE AND RESECURE IMMEDIATELY.

SOURCE: MODIFIED FROM VA. DCR, 1992

AMERICAN PUBLIC WORKS ASSOCIATION	
APWA	KANSAS CITY METROPOLITAN CHAPTER
EROSION CONTROL BLANKET SHEET 1 OF 2	STANDARD DRAWING NUMBER ESC-04 ADOPTED:

J:\KCMOAPWA\27787\CIVIL\details\draft 4-22-03\division III\ESC-04.DWG 04-22-2003 16:34 JRA

EROSION CONTROL BLANKET INSTALLATION FOR CHANNELS

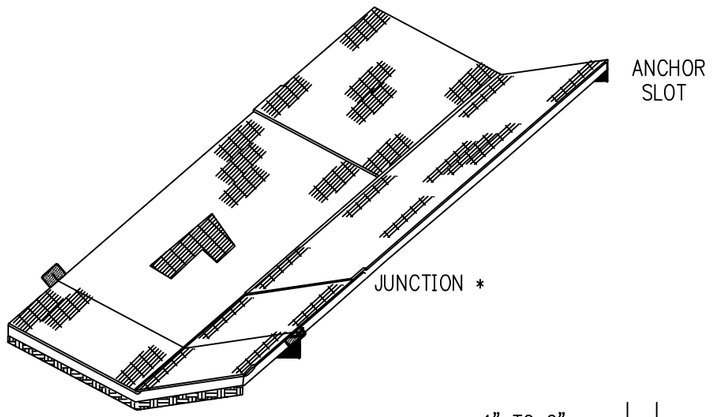

NOTE:

* JUNCTION: OVERLAP TOP BLANKET 6 INCHES MINIMUM AND STAPLE EVERY 6 INCHES ACROSS.

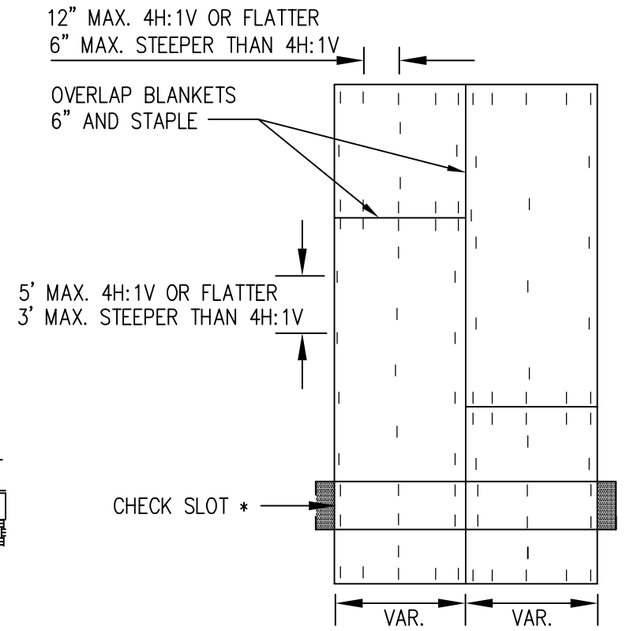

PLAN VIEW
STAPLING DIAGRAM
NOT TO SCALE

NOTE:

* CHECK SLOTS AT MIN. 50' INTERVALS; NOT REQUIRED WITH ALL COMBINATION BLANKETS

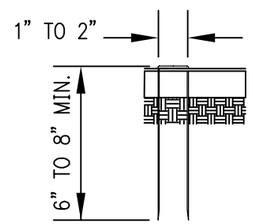

NOT TO SCALE

NOTE:

STAPLE FORMED FROM NO.11 STEEL WIRE.
MIN. 8" STAPLE LENGTH FOR SANDY SOIL.
MIN. 6" STAPLE LENGTH FOR OTHER SOIL.

NOTE:

APPROXIMATELY 200 STAPLES ARE REQUIRED PER 100 SQ. YDS. OF MATERIAL ROLL. ANCHOR SLOTS, JUNCTION SLOTS, AND CHECK SLOTS TO BE BURIED 6" TO 12" DEEP.

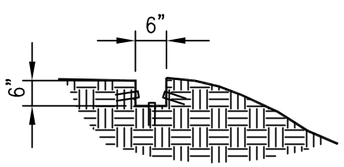

ANCHOR SLOT

EROSION CONTROL BLANKET NOTES (2 OF 2):

F) STAPLES:

STAPLES FOR ANCHORING BLANKET SHALL BE NO. 11-GAUGE WIRE OR HEAVIER. THEIR LENGTH SHALL BE A MINIMUM OF 6 INCHES. A LARGER STAPLE WITH A LENGTH OF UP TO 12 INCHES SHALL BE USED ON LOOSE, SANDY, OR UNSTABLE SOILS.

G) JOINING PREOTECTIVE COVERINGS:

OVERLAP THE END OF THE PREVIOUS ROLL A MINIMUM OF 6 INCHES AND STAPLE. STAPLE ACROSS THE END OF THE ROLL JUST BELOW THE ANCHOR SLOT AND ACROSS THE MATERIAL EVERY 6 INCHES.

H) TERMINAL END:

AT THE POINT AT WHICH THE MATERIAL IS DISCONTINUED, OR WHERE THE PROTECTIVE COVERING MEETS A STRUCTURE OF SOME TYPE, STAPLE A MINIMUM OF EVERY 12 INCHES.

I) FINAL CHECK:

THESE INSTALLATION CRITERIA MUST BE ADHERED TO:

1. ALL DISTURBED AREAS ARE SEEDED.
2. PROTECTIVE BLANKET IS IN UNIFORM CONTACT WITH THE SOIL.
3. ALL LAP JOINTS ARE SECURE.
4. ALL STAPLES ARE DRIVEN FLUSH WITH THE GROUND.

SOURCE: MODIFIED FROM VA. DCR, 1992

AMERICAN PUBLIC WORKS ASSOCIATION	
APWA	KANSAS CITY METROPOLITAN CHAPTER
EROSION CONTROL BLANKET SHEET 2 OF 2	STANDARD DRAWING NUMBER ESC-05 ADOPTED:

J:\KCMOAPWA\27787\CIVIL\details\draft 4-22-03\division III\ESC-05.DWG 04-22-2003 16:40 JRA

TURF REINFORCEMENT MAT SLOPE INSTALLATION

NOTES:

1. SOIL STABILIZATION SHOULD BE INSTALLED VERTICALLY DOWNSLOPE FOR BEST RESULTS.
2. SLOPE SURFACE SHALL BE SMOOTH AND FREE OF ROCKS, LUMPS OF DIRT, GRASS, AND STICKS. MAT SHALL BE PLACED FLAT ON SURFACE FOR PROPER SOIL CONTACT.

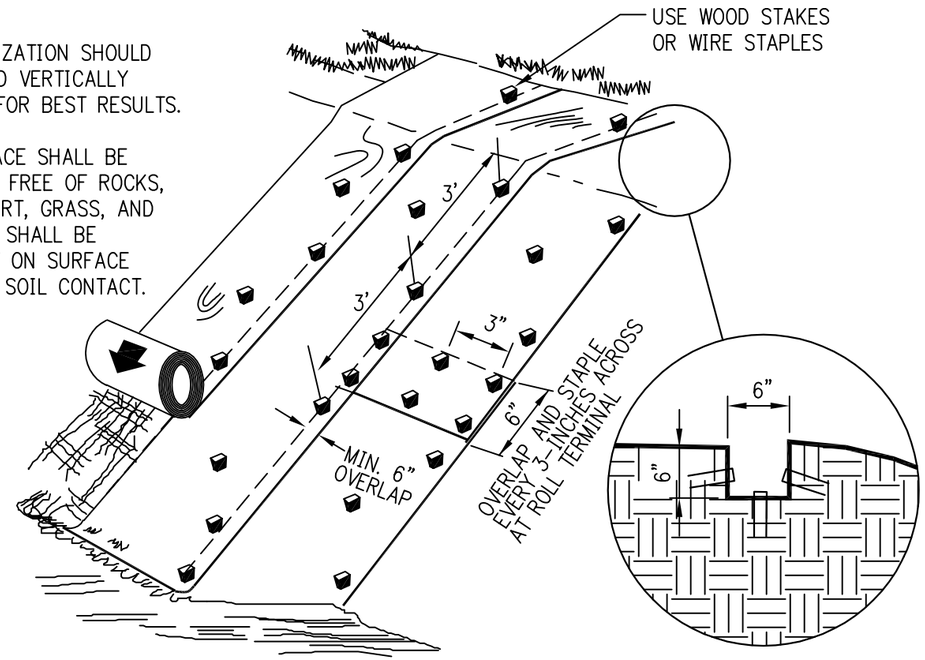

FILL SLOPE SECTION
NOT TO SCALE

ANCHOR SLOT
NOT TO SCALE
TRENCH INTO BERM AND PROGRESS DOWNSLOPE

TOE
MAINTAIN SLOPE ANGLE

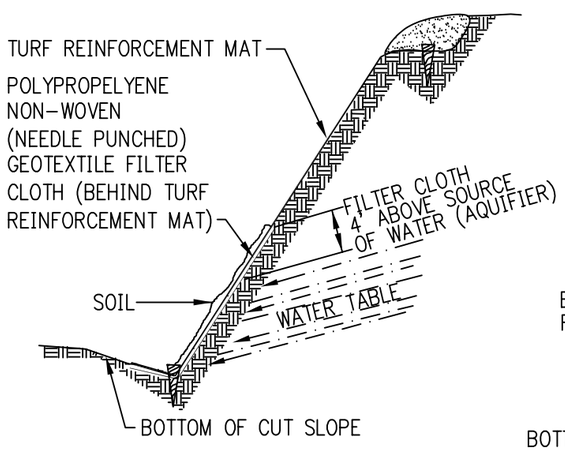

SLOPE LINING (WET SLOPE)
NOT TO SCALE

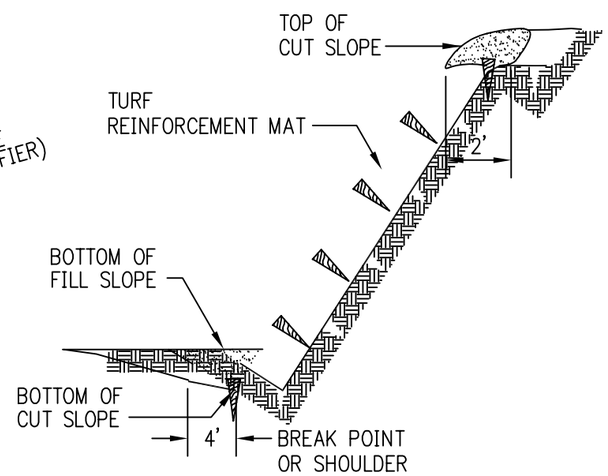

SLOPE LINING (DRY SLOPE)
NOT TO SCALE

SOURCE: MODIFIED FROM VA. DCR, 1992

TURF REINFORCEMENT MAT SLOPE INSTALLATION NOTES:

A) TURF REINFORCEMENT MAT:

1. THE MAJORITY OF THESE PRODUCTS PROVIDE A THREE DIMENSIONAL GEOMATRIX OF NYLON, POLYETHYLENE, OR RANDOMLY ORIENTED MONOFILAMENTS, FORMING A MAT. THESE PRODUCTS CONTAIN ULTRAVIOLET (UV) INHIBITING STABILIZERS, ADDED TO THE COMPOUNDS TO ENSURE ENDURANCE, AND PROVIDE "PERMEANENT ROOT REINFORCEMENT." THE THREE DIMENSIONAL FEATURE CREATES AN OPEN SPACE WHICH IS ALLOWED TO FILL WITH SOIL. THE ROOTS OF THE GRASS PLANT BECOME ESTABLISHED WITHIN THE MAT ITSELF, FORMING A SYNERGISTIC ROOT AND MAT SYSTEM. AS THE GRASS BECOMES ESTABLISHED, THE TWO ACTUALLY "REINFORCE" EACH OTHER, PREVENTING MOVEMENT OR DAMAGE TO THE SOIL. ALLOWABLE VELOCITIES ARE INCREASED CONSIDERABLY OVER NATURAL TURF STANDS. SELECTION OF THE APPROPRIATE MATTING MATERIALS ALONG WITH PROPER INSTALLATION BECOME CRITICAL FACTORS IN THE SUCCESS OF THIS PRACTICE. CONSULTATION WITH THE SUPPLIER OR THE MANUFACTURER AND THOROUGH EVALUATION OF PERFORMANCE DATA TO ENSURE PROPER SELECTION OF A SOIL STABILIZATION MATTING ARE ALSO ESSENTIAL.

B) INSTALLATION REQUIREMENTS:

1. SITE PREPARATION:

   AFTER SITE HAS BEEN SHAPED AND GRADED, PREPARE A FRIABLE SEEDBED RELATIVELY FREE OF CLODS AND ROCKS MORE THAN 1-INCH IN DIAMETER AND ANY FOREIGN MATERIAL THAT WILL PREVENT CONTACT OF THE SOIL STABILIZATION MAT WITH THE SOIL SURFACE. IF NECESSARY, REDIRECT ANY RUNOFF AWAY FROM THE DITCH OR SLOPE DURING INSTALLATION.

2. PLANTING:

   LIME, FERTILIZE, AND SEED IN ACCORDANCE WITH THE APPROVED PLAN, PAYING SPECIAL ATTENTION TO THE PLANT SELECTION CHOSEN FOR THE MATTED AREA. IF THE AREA HAS BEEN SEEDED PRIOR TO INSTALLING THE MAT, RESEED ALL AREAS DISTURBED DURING INSTALLATION.

3. LAYING AND SECURING:

   SIMILAR TO INSTALLING OTHER EROSION CONTROL BLANKETS, BUT PLAN-APPROVING AUTHORITY'S REQUIREMENTS OR MANUFACTURER'S RECOMMENDATIONS MUST BE FOLLOWED AS DETAILED. THE KEY TO ACHIEVING DESIRED PERFORMANCE IS DEPENDENT UPON PROPER INSTALLATION.

4. SECURING THE MATERIAL AND JOINING BLANKETS:

   PRODUCT SPECIFICATIONS VARY. UPSTREAM AND DOWNSTREAM TERMINAL SLOTS, NEW ROLL OVERLAPS, AND MULTIPLE WIDTH INSTALLATIONS DIFFER BY PRODUCT AND MANUFACTURER.

5. FINAL CHECK:

   ENSURE THAT THESE INSTALLATION CRITERIA ARE COMPLETED:

   a. ALL DISTURBED AREAS ARE SEEDED.
   b. SOIL STABILIZATION BLANKET IS IN UNIFORM CONTACT WITH THE SOIL
   c. ALL REQUIRED SLOTS AND LAPPED JOINTS ARE IN PLACE.
   d. THE MATERIAL IS PROPERLY ANCHORED.

AMERICAN PUBLIC WORKS ASSOCIATION		
APWA	KANSAS CITY METROPOLITAN CHAPTER	
TURF REINFORCEMENT MAT SLOPE INSTALLATION	STANDARD DRAWING NUMBER ESC-06	
	ADOPTED:	

J:\KCMOAPWA\27787\CIVIL\details\draft 4-22-03\division III\ESC-06.DWG 04-22-2003 16:47 JRA

TURF REINFORCEMENT MAT CHANNEL INSTALLATION

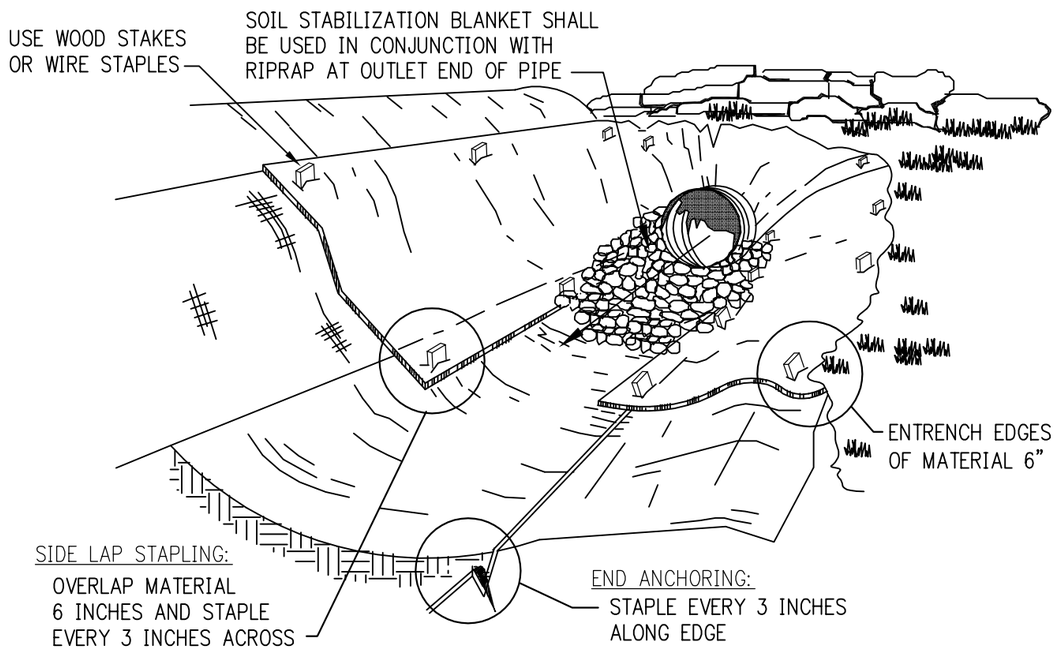

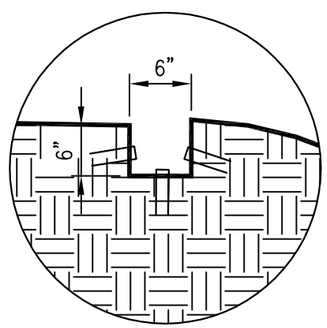

ANCHOR SLOT DETAIL
NOT TO SCALE

TURF REINFORCEMENT MAT CHANNEL INSTALLATION NOTES:

A) TURF REINFORCEMENT MAT:

1. THE MAJORITY OF THESE PRODUCTS PROVIDE A THREE DIMENSIONAL GEOMATRIX OF NYLON, POLYETHYLENE, OR RANDOMLY ORIENTED MONOFILAMENTS TO FORM A MAT. THESE PRODUCTS CONTAIN ULTRAVIOLET (UV) INHIBITING STABILIZERS ADDED TO THE COMPOUNDS TO ENSURE ENDURANCE AND PROVIDE PERMEANENT ROOT REINFORCEMENT. THE THREE DIMENSIONAL FEATURE CREATES AN OPEN SPACE WHICH IS ALLOWED TO FILL WITH SOIL. THE ROOTS OF THE GRASS BECOME ESTABLISHED WITHIN THE MAT ITSELF, FORMING A SYNERGISTIC ROOT AND MAT SYSTEM. AS THE GRASS BECOMES ESTABLISHED, THE TWO ACTUALLY REINFORCE EACH OTHER PREVENTING MOVEMENT OF THE SOIL. ALLOWABLE VELOCITIES ARE INCREASED CONSIDERABLY OVER NATURAL TURF STANDS.
SELECTION OF THE APPROPRIATE MATTING MATERIALS ALONG WITH PROPER INSTALLATION BECOME CRITICAL FACTORS IN THE SUCCESS OF THIS PRACTICE. CONSULTATION WITH THE SUPPLIER OR THE MANUFACTURER AND THOROUGH EVALUATION OF PERFORMANCE DATA TO ENSURE PROPER SELECTION OF A SOIL STABILIZATION MATTING ARE ALSO ESSENTIAL.

B) INSTALLATION REQUIREMENTS:

1. SITE PREPARATION:

   AFTER SITE HAS BEEN SHAPED AND GRADED, PREPARE A FRIABLE SEEDBED RELATIVELY FREE OF CLODS AND ROCKS MORE THAN 1-INCH IN DIAMETER AND ANY FOREIGN MATERIAL THAT WILL PREVENT CONTACT OF THE SOIL STABILIZATION MAT WITH THE SOIL SURFACE. IF NECESSARY, REDIRECT ANY RUNOFF AWAY FROM THE DITCH OR SLOPE DURING INSTALLATION.

2. PLANTING:

   LIME, FERTILIZE, AND SEED IN ACCORDANCE WITH THE APPROVED PLAN, PAYING SPECIAL ATTENTION TO THE PLANT SELECTION CHOSEN FOR THE MATTED AREA. IF THE AREA HAS BEEN SEEDED PRIOR TO INSTALLING THE MAT, RESEED ALL AREAS DISTURBED DURING INSTALLATION.

3. LAYING AND SECURING:

   SIMILAR TO INSTALLING OTHER EROSION CONTROL BLANKETS, BUT PLAN APPROVING AUTHORITY'S REQUIREMENTS OR MANUFACTURER'S RECOMMENDATIONS MUST BE FOLLOWED AS DETAILED. THE KEY TO ACHIEVING DESIRED PERFORMANCE IS DEPENDENT UPON PROPER INSTALLATION.

4. SECURING THE MATERIAL AND JOINING BLANKETS:

   PRODUCT SPECIFICATIONS VARY. UPSTREAM AND DOWNSTREAM TERMINAL SLOTS, NEW ROLL OVERLAPS, AND MULTIPLE WIDTH INSTALLATIONS DIFFER BY PRODUCT AND MANUFACTURER.

5. FINAL CHECK:

   THESE INSTALLATION CRITERIA MUST BE COMPLETED:
   a. ALL DISTURBED AREAS ARE SEEDED.
   b. SOIL STABILIZATION BLANKET IS IN UNIFORM CONTACT WITH THE SOIL
   c. ALL REQUIRED SLOTS AND LAPPED JOINTS ARE IN PLACE.
   d. THE MATERIAL IS PROPERLY ANCHORED.

SOURCE: MODIFIED FROM VA. DCR, 1992

AMERICAN PUBLIC WORKS ASSOCIATION	
APWA	KANSAS CITY METROPOLITAN CHAPTER
TURF REINFORCEMENT MAT CHANNEL INSTALLATION	STANDARD DRAWING NUMBER ESC-07 ADOPTED:

J:\KCMOAPWA\27787\CIVIL\details\draft 4-22-03\division III\ESC-07.DWG 04-22-2003 16:56 JRA

STAKES, STAPLES, AND PINS

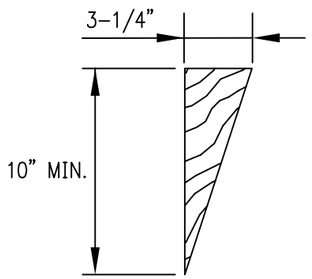

1. STAKE

SEE NOTE 1

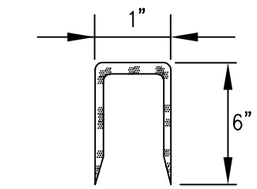

11 GAUGE STEEL 6"x1"x6" STAPLE

2. STAPLE

SEE NOTE 2

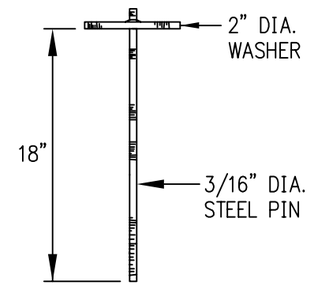

3. PIN

SEE NOTE 3

STAKES, STAPLES, AND PINS
FOR INSTALLATION OF
ROLLED EROSION CONTROL PRODUCTS

NOT TO SCALE

STAKES, STAPLES, AND PINS NOTES:

GENERAL NOTES:

1. STAKES SHALL BE 1x4 TRIANGULAR SURVEY STAKES A MINIMUM OF 10" IN LONG.
2. STAPLES SHALL BE 11 GAUGE STEEL A MINIMUM OF 1" WIDE BY 6" IN LONG. A 2"x8" STAPLE MAY BE REQUIRED IN CERTAIN SOIL CONDITIONS.
3. STEEL PINS SHALL BE 3/16 DIAMETER BY 18" IN LONG WITH A 2" DIAMETER WASHER ON TOP. (SEE ILLUSTRATION.)
4. ANCHORING METHODS AND RECOMMENDATIONS VARY BY MANUFACTURERS. THE EXPECTATION OF HIGH VELOCITIES SHOULD DICTATE THE USE OF MORE SUBTANTIAL ANCHORING.

SOURCE: MODIFIED FROM VA. DCR, 1992

AMERICAN PUBLIC WORKS ASSOCIATION		
APWA	KANSAS CITY METROPOLITAN CHAPTER	
STAKES, STAPLES, AND PINS	STANDARD DRAWING NUMBER ESC-08	
	ADOPTED:	

J:\KCMOAPWA\27787\CIVIL\details\draft 4-22-03\division III\ESC-08.DWG 04-22-2003 17:01 JRA

STAPLE PATTERNS FOR ROLLED EROSION CONTROL PRODUCTS

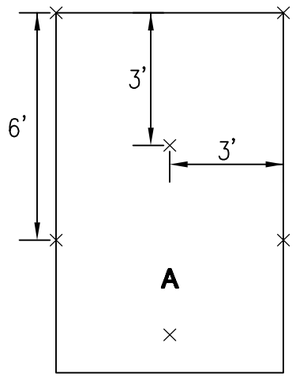

1 STAPLE PER SQ. YD.

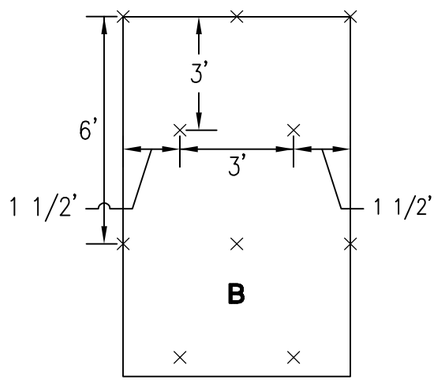

1 1/2 STAPLES PER SQ. YD.

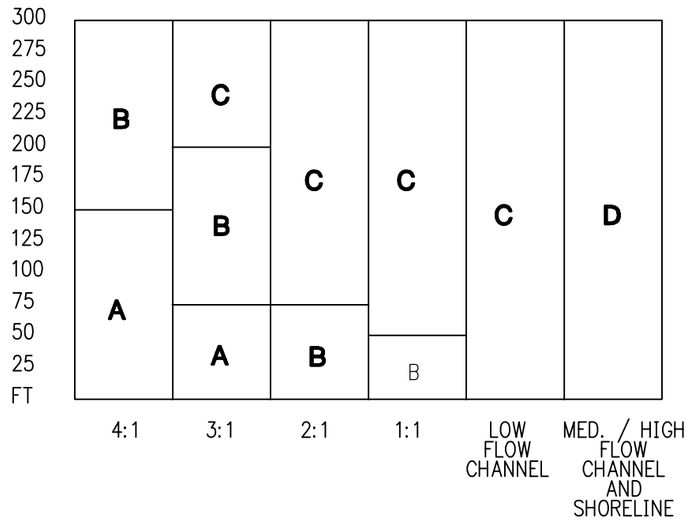

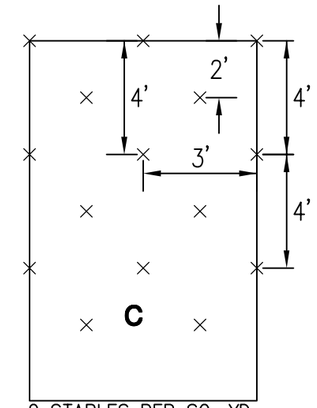

2 STAPLES PER SQ. YD.

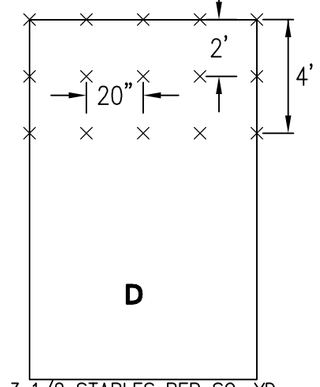

3 1/2 STAPLES PER SQ. YD.

GENERAL STAPLE PATTERN GUIDE AND RECOMMENDATIONS FOR ROLLED EROSION CONTROL PRODUCTS

NOT TO SCALE

NOTE:

FOR OPTIMUM RESULTS, THESE RECOMMENDED STAPLE PATTERN GUIDES MUST BE FOLLOWED UNLESS OTHERWISE DICTATED BY THE MANUFACTURER. SUGGESTED ANCHORING METHODS VARY BY MANUFACTURER. THIS CHART SHOWS HOW SLOPE LENGTHS AND GRADIENTS AFFECT STAPLING PATTERNS.

SOURCE: MODIFIED FROM VA. DCR, 1992

AMERICAN PUBLIC WORKS ASSOCIATION	
APWA	KANSAS CITY METROPOLITAN CHAPTER
STAPLE PATTERNS FOR ROLLED EROSION CONTROL PRODUCTS	STANDARD DRAWING NUMBER ESC-09 ADOPTED:

J:\KCMOAPWA\27787\CIVIL\details\draft 4-22-03\division III\ESC-09.DWG 04-23-2003 08:28 JRA

SEDIMENT FENCE

1. EXCAVATE A 6"x4" TRENCH.

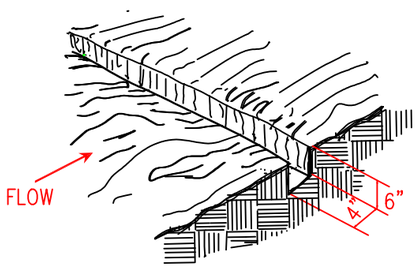

2. SET THE STAKES ALONG THE DOWN SLOPE SIDE OF THE TRENCH.

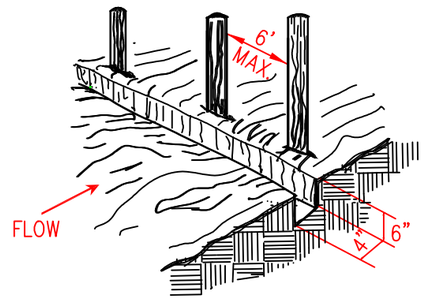

3. STAPLE GEOTEXTILE MATERIAL TO STAKES AND EXTEND IT INTO AND AROUND THE BOTTOM OF THE TRENCH.

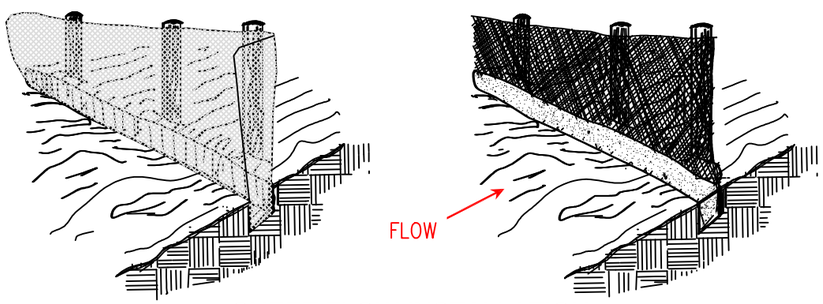

4. BACKFILL AND COMPACT THE EXCAVATED SOIL OVER THE GEOTEXTILE IN THE TRENCH.

SHEET FLOW INSTALLATION (PERSPECTIVE VIEW)

NOT TO SCALE

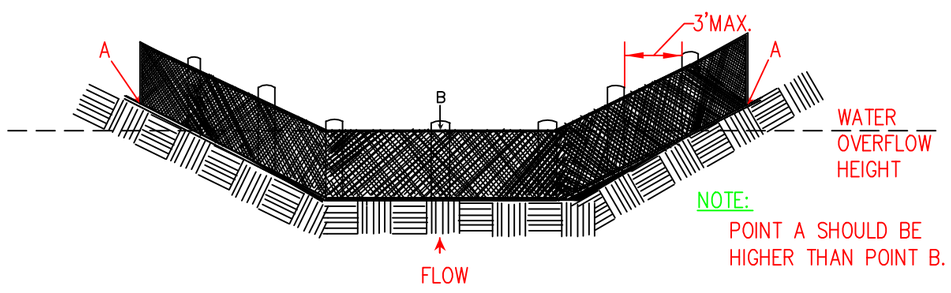

NOTE:
POINT A SHOULD BE HIGHER THAN POINT B.

DRAINAGEWAY INSTALLATION (FRONT ELEVATION)

NOT TO SCALE

SEDIMENT FENCE NOTES:

A) INSTALLATION:

1. THE HEIGHT OF SEDIMENT FENCE SHALL BE A MINIMUM OF 16 INCHES ABOVE THE ORIGINAL GROUND SURFACE AND SHALL NOT EXCEED 34 INCHES ABOVE THE GROUND SURFACE.
2. THE FABRIC SHALL BE PURCHASED IN A CONTINUOUS ROLL CUT TO THE LENGTH OF THE BARRIER TO AVOID THE USE OF JOINTS. WHEN JOINTS ARE UNAVOIDABLE, FILTER CLOTH SHALL BE SECURELY SPLICED TOGETHER ONLY AT SUPPORT POSTS, WITH A MAX 6-INCH OVERLAP.
3. DIG A TRENCH AT LEAST 6 INCHES DEEP AND 4 INCHES WIDE ALONG THE FENCE ALIGNMENT.
4. DRIVE POSTS AT LEAST 24 INCHES INTO THE GROUND ON THE DOWNSLOPE SIDE OF THE TRENCH. SPACE POSTS A MAXIMUM OF 6 FEET APART.
5. EXTRA-STRENGTH SEDIMENT FENCE FABRIC SHALL BE USED. POSTS FOR THIS TYPE OF FABRIC SHALL BE PLACED A MAXIMUM OF 6 FEET APART. THE SEDIMENT FABRIC SHALL BE FASTENED SECURELY TO THE UPSLOPE SIDE OF THE POSTS USING A MINIMUM OF ONE INCH LONG, HEAVY-DUTY WIRE STAPLES OR TIE-WIRES, AND EIGHT INCHES OF THE FABRIC SHALL BE EXTENDED INTO THE TRENCH. THE FABRIC SHALL NOT BE STAPLED TO EXISTING TREES.
6. PLACE THE BOTTOM 1 FOOT OF FABRIC IN THE MINIMUM-OF-6-INCH DEEP TRENCH, LAPPING TOWARD THE UPSLOPE SIDE. BACKFILL WITH COMPACTED EARTH OR GRAVEL.
7. IF A SEDIMENT FENCE IS TO BE CONSTRUCTED ACROSS A DITCH LINE OR SWALE, IT MUST BE OF SUFFICIENT LENGTH TO ELIMINATE ENDFLOW, AND THE PLAN CONFIGURATION SHALL RESEMBLE AN ARC OR HORSESHOE, PLACED ON A CONTOUR, WITH THE ENDS ORIENTED UPSLOPE. EXTRA-STRENGTH SEDIMENT FABRIC SHALL BE USED WITH A MAXIMUM 3-FOOT SPACING OF POSTS.
8. TO REDUCE MAINTENANCE, EXCAVATE A SHALLOW SEDIMENT STORAGE AREA IN THE UPSLOPE SIDE OF THE FENCE. PROVIDE GOOD ACCESS IN AREAS OF HEAVY SEDIMENTATION FOR CLEAN OUT AND MAINTENANCE.
9. SEDIMENT FENCES SHALL BE REMOVED WHEN THEY HAVE SERVED THEIR USEFUL PURPOSE, BUT NOT BEFORE THE UPSLOPE AREA HAS BEEN PERMANENTLY STABILIZED.

B) TROUBLESHOOTING:

1. DETERMINE THE EXACT LOCATION OF UNDERGROUND UTILITIES, BEFORE FENCE INSTALLATION SO UTILITIES ARE NOT DISTURBED.
2. GRADE ALIGNMENT OF FENCE AS NEEDED TO PROVIDE A BROAD, NEARLY LEVEL AREA UPSTREAM OF FENCE TO ALLOW SEDIMENT COLLECTION AREA.

C) INSPECTION MAINTENANCE:

1. INSPECT SEDIMENT FENCES AT LEAST ONCE A WEEK AND AFTER EACH RAINFALL. MAKE ANY REQUIRED REPAIRS IMMEDIATELY.
2. SHOULD THE FABRIC OF A SEDIMENT FENCE COLLAPSE, TEAR, DECOMPOSE, OR BECOME INEFFECTIVE, REPLACE IT PROMPTLY.
3. REMOVE SEDIMENT DEPOSITS AS NECESSARY TO PROVIDE ADEQUATE STORAGE VOLUME FOR THE NEXT RAIN AND TO REDUCE PRESSURE ON THE FENCE. AVOID DAMAGING OR UNDERMINING THE FENCE DURING CLEANOUT. SEDIMENT ACCUMULATION SHOULD NOT EXCEED 1/2 THE HEIGHT OF THE FENCE.
4. REMOVE ALL FENCING MATERIALS AND UNSTABLE SEDIMENT DEPOSITS, AND BRING THE AREA TO GRADE AND STABILIZE IT AFTER THE CONTRIBUTING DRAINAGE AREA HAS BEEN PROPERLY AND COMPLETELY STABILIZED.

SOURCE: MODIFIED FROM VA. DCR, 1992

AMERICAN PUBLIC WORKS ASSOCIATION	
APWA	KANSAS CITY METROPOLITAN CHAPTER
SEDIMENT FENCE	STANDARD DRAWING NUMBER ESC-10 ADOPTED:

J:\KCMOAPWA\27787\CIVIL\details\draft 4-22-03\division III\ESC-10.DWG 04-23-2003 08:46 JRA

SEDIMENT FENCE INSTALLATION SLICING METHOD

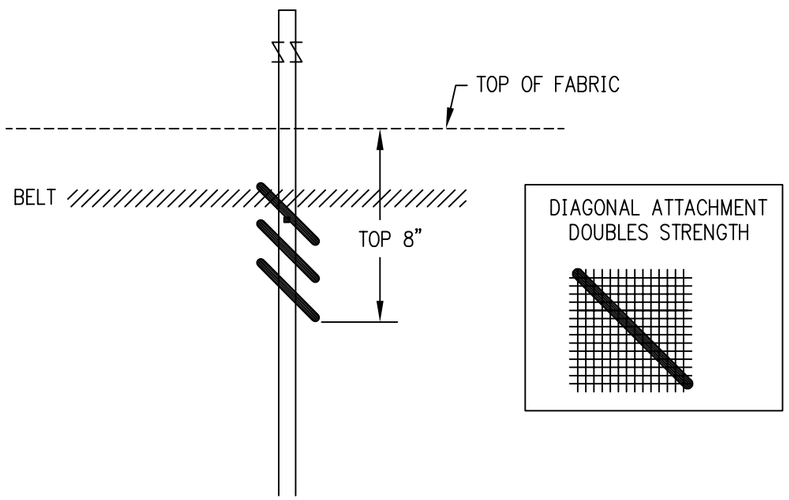

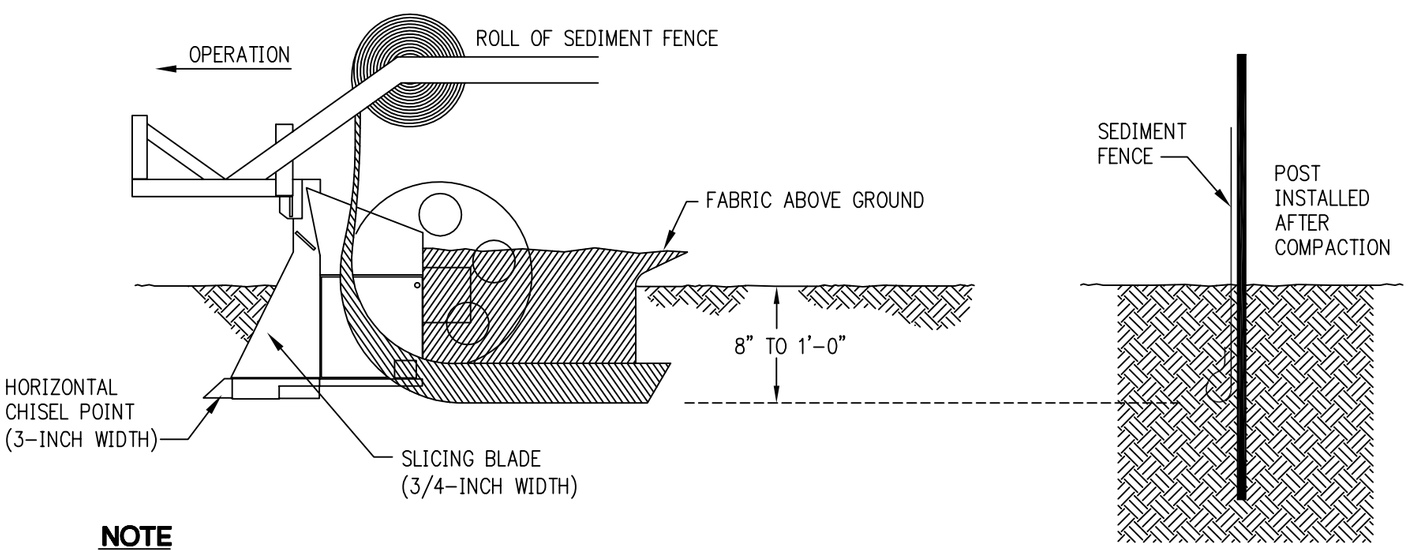

NOTE

VIBRATORY PLOW IS NOT ACCEPTABLE BECAUSE OF HORIZONTAL COMPACTION.

SEDIMENT FENCE INSTALLATION SLICING METHOD NOTES:

1. LIMIT PONDING HEIGHT TO 24"
2. ATTACH FABRIC TO UPSTREAM SIDE OF POST.
3. DRIVE OVER EACH SIDE OF SEDIMENT FENCE 2 TO 4 TIMES WITH DEVICE EXERTING 60 PSI OR GREATER AFTER MATERIAL IS SLICED INTO THE GROUND.
4. SPACE POSTS A MAX OF 7' ON OPEN RUNS AND 4' ON POOLING AREAS.
5. SINK POSTS AS FAR BELOW GROUND AS FABRIC ABOVE GROUND.

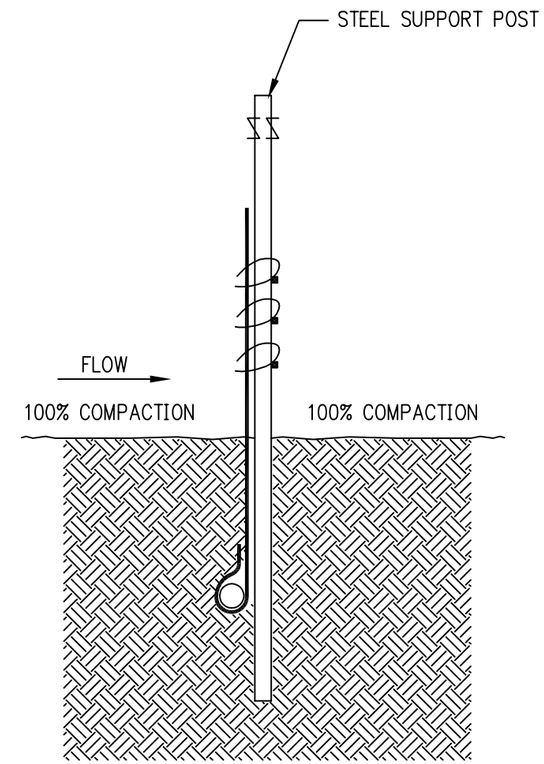

SOURCE: TOM CARPENTER, 2000

AMERICAN PUBLIC WORKS ASSOCIATION	
APWA	KANSAS CITY METROPOLITAN CHAPTER
SEDIMENT FENCE INSTALLATION SLICING METHOD	STANDARD DRAWING NUMBER ESC-11
	ADOPTED:

J:\KCMOAPWA\27787\CIVIL\details\draft 4-22-03\division III\ESC-11.dwg 04-23-2003 08:50 JRA

SUPER SEDIMENT FENCE

1. EXCAVATE A 6"X4" TRENCH

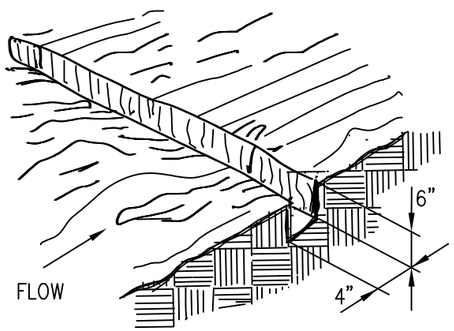

2. SET THE METAL T-POSTS OR FENCE POSTS ON THE DOWNSLOPE SIDE OF THE TRENCH. SECURE WIRE FENCING TO THE POSTS.

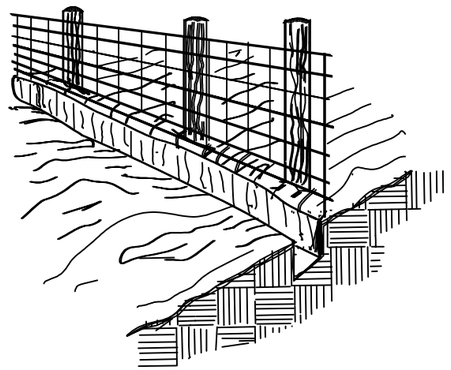

3. ATTACH THE GEOTEXTILE FABRIC TO THE WIRE FENCE AND EXTEND IT INTO AND AROUND THE BOTTOM OF THE TRENCH.

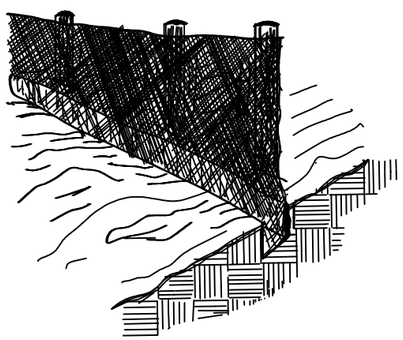

4. BACKFILL AND COMPACT THE EXCAVATED SOIL.

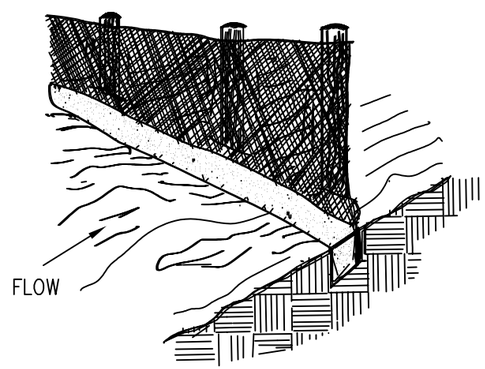

EXTENSION OF FABRIC AND WIRE INTO THE TRENCH

NOT TO SCALE

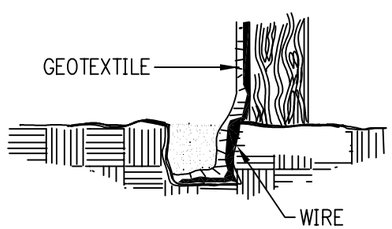

SECTIONAL FENCE ANCHOR DETAIL

SOURCE: MODIFIED FROM VA. DCR, 1992

SUPER SEDIMENT FENCE NOTES:

A) CONSTRUCTION SPECIFICATIONS:

1. FENCING SHALL BE 42-INCHES IN HEIGHT.
2. WIRE FENCE SHALL BE FASTENED SECURELY TO THE FENCE POSTS WITH WIRE TIES AND STAPLES. THE LOWER TENSION WIRE, BRACE AND TRUSS RODS, DRIVE ANCHORS, AND POST CAPS ARE NOT REQUIRED EXCEPT ON THE ENDS OF THE FENCE.
3. SEDIMENT FENCE SHALL BE FASTENED SECURELY TO THE WIRE FENCE WITH TIES SPACED EVERY 24 INCHES AT THE TOP AND MID-SECTION.
4. SEDIMENT FENCE AND WIRE SHALL BE EMBEDDED A MINIMUM OF 8-INCHES INTO THE GROUND.
5. WHEN TWO SECTIONS OF GEOTEXTILE FABRIC ADJOIN EACH OTHER, THEY SHALL BE OVERLAPPED BY 6-INCHES AND FOLDED.
6. WIRE FENCE WILL BE BETWEEN 9 AND 14 GAUGE AND SHALL HAVE A MAXIMUM MESH SPACING OF 6-INCHES.
7. SEDIMENT FENCE SHALL MEET THE FOLLOWING REQUIREMENTS FOR GEOTEXTILE CLASS F: ADDITIONAL SPECIFICATIONS ARE FOUND IN ASTM 6461.

SEDIMENT FENCE REQUIREMENTS

TENSION STRENGTH	50 LB/IN OR MORE	ASTM 4632
TENSION MODULUS	20 LB/IN OR MORE	ASTM 4632
FLOW RATE	0.3 GAL/FT^2/MINUTE OR LESS	ASTM 5141
FILTERING EFFICIENCY	75 % OR MORE	ASTM 5141

B) INSTALLATION:

1. THE HEIGHT OF A SEDIMENT FENCE SHALL BE A MINIMUM OF 16 INCHES ABOVE THE ORIGINAL GROUND SURFACE AND SHALL NOT EXCEED 34-INCHES ABOVE GROUND SURFACE.
2. THE FILTER FABRIC SHALL BE PURCHASED IN A CONTINUOUS ROLL AND CUT TO THE LENGTH OF THE BARRIER TO AVOID THE USE OF JOINTS. WHEN JOINTS ARE UNAVOIDABLE, FILTER CLOTH SHALL BE SPLICED TOGETHER ONLY AT A SUPPORT POST, WITH A MINIMUM 6-INCH OVERLAP, AND SECURELY
3. SEALED.
   A TRENCH SHALL BE EXCAVATED APPROXIMATELY 4 INCHES WIDE AND 6 INCHES DEEP ON THE UPSLOPE
4. SIDE OF THE PROPOSED LOCATION OF THE FENCE.
   WHEN WIRE SUPPORT IS USED, STANDARD-STRENGTH FILTER CLOTH MAY BE USED. POSTS FOR THIS TYPE OF INSTALLATION SHALL BE PLACED A MAXIMUM OF 10 FEET APART. THE WIRE MESH FENCE MUST BE FASTENED SECURELY TO THE UPSLOPE SIDE OF THE POSTS USING HEAVY DUTY WIRE STAPLES AT LEAST 1 INCH LONG, TIE WIRES, OR HOG RINGS. THE WIRE SHALL EXTEND INTO THE TRENCH A MINIMUM OF 2 INCHES AND SHALL NOT EXTEND MORE THAN 34 INCHES ABOVE THE ORIGINAL GROUND SURFACE. THE STANDARD-STRENGTH FABRIC SHALL BE STAPLED OR WIRED TO THE FENCE, AND 8 INCHES OF THE FABRIC
5. SHALL BE EXTENDED INTO THE TRENCH. THE FABRIC SHALL NOT BE STAPLED TO EXISTING TREES.
   IF A SEDIMENT FENCE IS TO BE CONSTRUCTED ACROSS A DITCH LINE OR SWALE, IT MUST BE OF SUFFICIENT LENGTH TO ELIMINATE ENDFLOW, AND THE PLAN CONFIGURATION SHALL RESEMBLE AN ARC OR HORSESHOE WITH THE ENDS ORIENTED UPSLOPE. EXTRA-STRENGTH FILTER FABRIC SHALL BE USED FOR
6. THIS APPLICATION WITH A MAXIMUM 3-FOOT SPACING OF POSTS.
   THE 4 INCH BY 6 INCH TRENCH SHALL BE BACKFIELD AND THE SOIL COMPACTED OVER THE FILTER
7. FABRIC.
   SEDIMENT FENCES SHALL BE REMOVED WHEN THEY HAVE SERVED THEIR USEFUL PURPOSE, BUT NOT BEFORE THE UPSLOPE AREA HAS BEEN PERMANENTLY STABILIZED. SEDIMENT ACCUMULATION SHOULD NOT EXCEED 1/2 THE HEIGHT OF THE FENCE.

C) INSPECTION AND MAINTENANCE:

1. INSPECT SEDIMENT FENCES AT LEAST ONCE A WEEK AND AFTER EACH RAINFALL. MAKE ANY REQUIRED REPAIRS IMMEDIATELY.
2. SHOULD THE FABRIC OF A SEDIMENT FENCE COLLAPSE, TEAR, DECOMPOSE, OR BECOME INEFFECTIVE, REPLACE IT PROMPTLY.
3. MAINTENACE SHALL BE PERFORMED AS NEEDED AND SEDIMENT BUILD-UPS REMOVED WHEN BULGES DEVELOP IN THE SEDIMENT FENCE OR WHEN SEDIMENT REACHES 50% OF THE FENCE HEIGHT. AVOID DAMAGING OR UNDERMINING THE FENCE DURING CLEANOUT.
4. REMOVE ALL FENCING MATERIALS AND UNSTABLE SEDIMENT DEPOSITS, AND BRING THE AREA TO GRADE AND STABILIZE IT AFTER THE CONTRIBUTING DRAINAGE AREA HAS BEEN PROPERLY STABILIZED.

AMERICAN PUBLIC WORKS ASSOCIATION		
APWA	KANSAS CITY METROPOLITAN CHAPTER	
SUPER SEDIMENT FENCE	STANDARD DRAWING NUMBER ESC-12	
	ADOPTED:	

J:\KCMOAPWA\27787\CIVIL\details\draft 4-22-03\division III\ESC-12.DWG 04-23-2003 08:58 JRA

STRAW BALE BARRIER

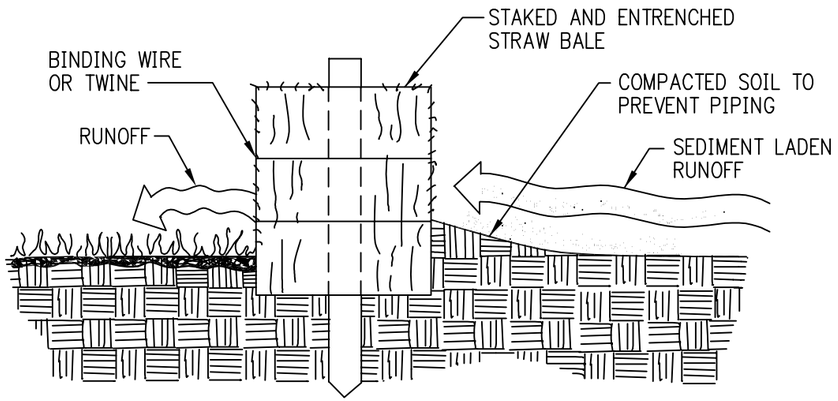

1. EXCAVATE THE TRENCH.

2. PLACE AND STAKE STRAW BALES.

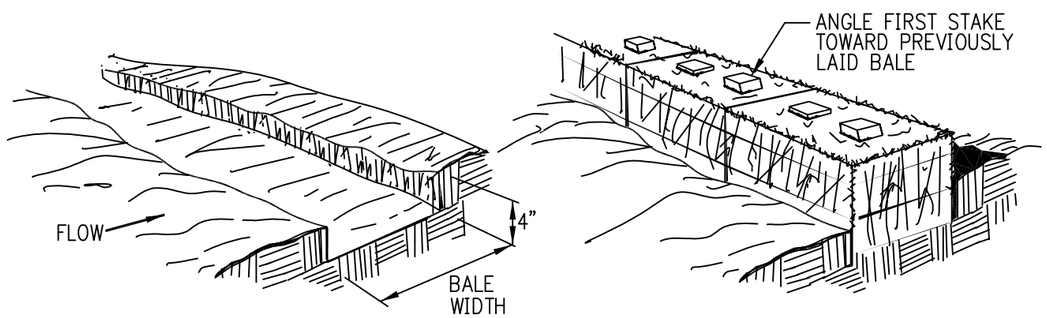

PROPERLY INSTALLED STRAW BALE (CROSS SECTION)

NOT TO SCALE

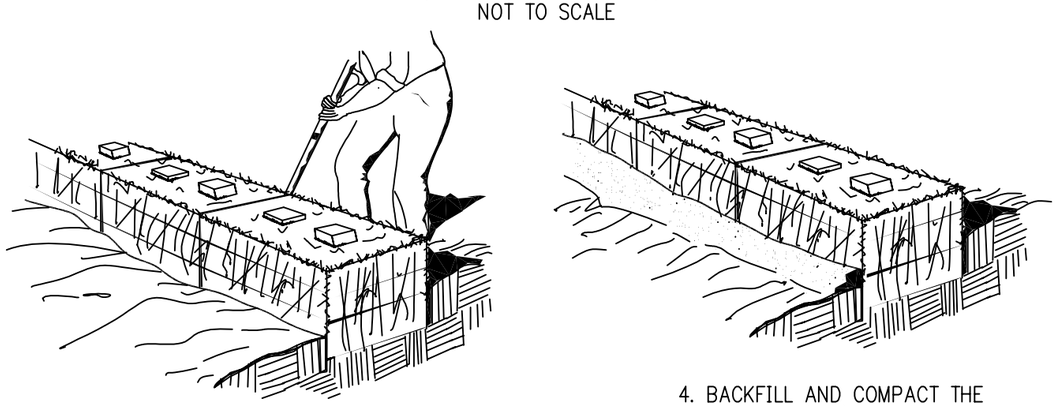

3. WEDGE LOOSE STRAW BETWEEN BALES.

4. BACKFILL AND COMPACT THE EXCAVATED SOIL.

CONSTRUCTION OF STRAW BALE BARRIER

SOURCE: MODIFIED FROM VA. DCR, 1992

STRAW BALE BARRIER NOTES:

A) INSTALLATION:

1. EXCAVATE A TRENCH AT LEAST 4 INCHES DEEP, A BALE'S WIDTH, AND LONG ENOUGH THAT THE END BALES ARE SOMEWHAT UPSLOPE OF THE SEDIMENT POOL.
2. PLACE EACH BALE END TO END IN THE TRENCH SO THE BINDINGS ARE ORIENTED AROUND THE SIDES RATHER THAN TOP TO BOTTOM.
3. ANCHOR THE BALES BY DRIVING TWO 36-INCH LONG, 2X2-INCH HARDWOOD STAKES THROUGH EACH BALE UNTIL NEARLY FLUSH WITH THE TOP. DRIVE THE FIRST STAKE TOWARD THE PREVIOUSLY LAID BALE TO FORCE THE BALES TOGETHER.
4. WEDGE LOOSE STRAW INTO ANY GAPS BETWEEN THE BALES TO PREVENT SEDIMENT-LADEN WATER FROM LEAKING THROUGH.
5. BACKFILL AND COMPACT THE EXCAVATED SOIL AGAINST THE BALES TO GROUND LEVEL ON THE DOWNSLOPE SIDE AND TO 4 INCHES ABOVE GROUND LEVEL ON THE UPSLOPE SIDE.

B) CONSTRUCTION SPECIFICATIONS:

1. ONLY USE AS PERIMETER CONTROL FOR LESS THAN ONE ACRE OF RUNOFF AREA.
2. DETERMINE EXACT LOCATION OF UNDERGROUND UTILITIES.
3. GRADE ALIGNMENT OF BARRIER AS NEEDED TO PROVIDE BROAD, NEARLY LEVEL AREA UPSTREAM OF BARRIER.

C) INSPECTION AND MAINTENANCE:

1. INSPECT STRAW BALE BARRIERS AFTER EACH STORM EVENT AND REMOVE ANY SEDIMENT DEPOSITS PROMPTLY, TAKING CARE NOT TO UNDERMINE THE ENTRENCHED BALES.
2. INSPECT PERIODICALLY FOR DETERIORATION OR DAMAGE FROM CONSTRUCTION ACTIVITIES. REPLACE DAMAGED BALES IMMEDIATELY.
3. AFTER THE CONTRIBUTING DRAINAGE AREA HAS BEEN STABILIZED, REMOVE ALL STRAW BALES AND SEDIMENT, BRING THE DISTURBED AREA TO GRADE, AND STABILIZE.

AMERICAN PUBLIC WORKS ASSOCIATION	
APWA	KANSAS CITY METROPOLITAN CHAPTER
STRAW BALE BARRIER	STANDARD DRAWING NUMBER ESC-13 ADOPTED:

J:\KCMOAPWA\27787\CIVIL\details\draft 4-22-03\division III\ESC-13.DWG 04-23-2003 09:00 JRA

COMPOST BERM

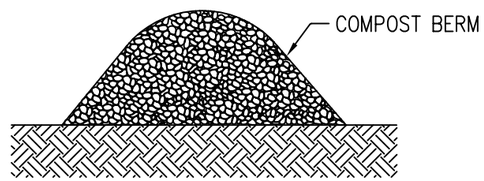

CROSS SECTION

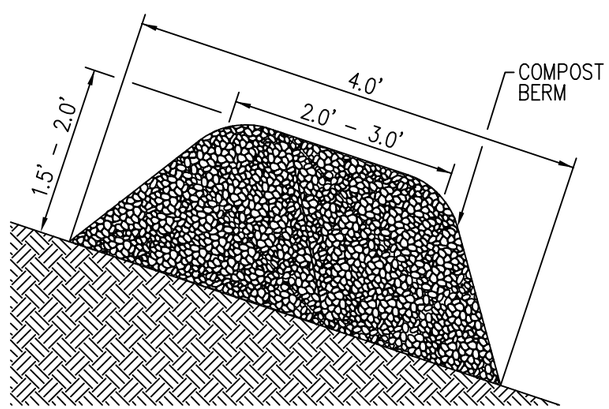

DETAIL
NOT TO SCALE

COMPOST BERM MULCH NOTES:

A) GENERAL NOTES:

1. THE SEDIMENT CONTROL BERM SHALL BE PLACED UNCOMPACTED IN A WINDROW AT LOCATIONS SHOWN ON THE PLANS OR AS DIRECTED BY THE ENGINEER.

2. PARALLEL TO THE BASE OF THE SLOPE, OR AROUND THE PERIMETER OF OTHER AFFECTED AREAS, CONSTRUCT A 1 TO 1.5 FOOT HIGH BY 2.5 TO 3 FOOT WIDE BERM. FOR MAXIMUM WATER TREATMENT ABILITY OR FOR STEEP SLOPES, CONSTRUCT A 1.5 TO 2 FOOT HIGH TRAPEZOIDAL BERM THAT IS APPROXIMATELY 2 TO 3 FOOT WIDE AT THE TOP AND A MINIMUM OF 4 FEET WIDE AT THE BASE. IN EXTREME CONDITIONS, OR WHERE SPECIFIED BY THE ENGINEER, A SECOND BERM SHALL BE CONSTRUCTED AT THE TOP OF THE SLOPE. ENGINEER SHALL SPECIFY BERM REQUIREMENTS.

3. IF BERM IS TO BE LEFT AS PERMANENT OR PART OF THE NATURAL LANDSCAPE, THE COMPOST BERM MAY BE SEEDED DURING APPLICATION FOR PERMANENT VEGETATION. THE ENGINEER/LANDSCAPE ARCHITECT SHALL SPECIFY SEED REQUIREMENTS.

4. DO NOT USE COMPOST BERMS IN ANY RUNOFF CHANNELS.

SOURCE: MODIFIED FROM 1998 REXIUS FOREST BY-PRODUCTS, INC.

AMERICAN PUBLIC WORKS ASSOCIATION	
APWA	KANSAS CITY METROPOLITAN CHAPTER
COMPOST BERM	STANDARD DRAWING NUMBER ESC-14 ADOPTED:

J:\KCMOAPWA\27787\CIVIL\details\draft 4-22-03\division III\ESC-14.DWG 04-23-2003 09:04 JRA

ROCK CHECK DAM

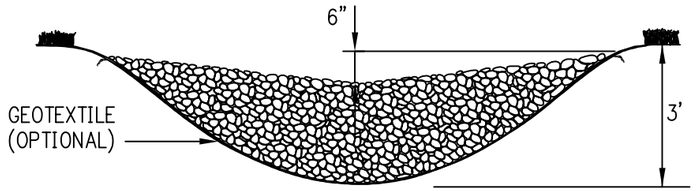

ROCK CHECK DAM
2 ACRES OR LESS OF DRAINAGE AREA

NOT TO SCALE

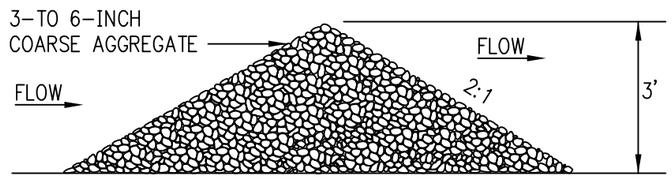

(SIDE VIEW)

NOT TO SCALE

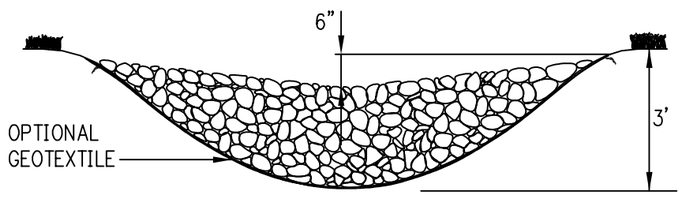

2-10 ACRES OF DRAINAGE AREA

NOT TO SCALE

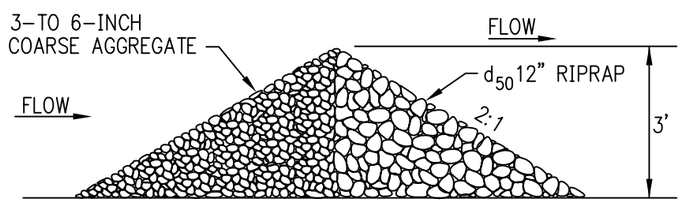

(SIDE VIEW)

NOT TO SCALE

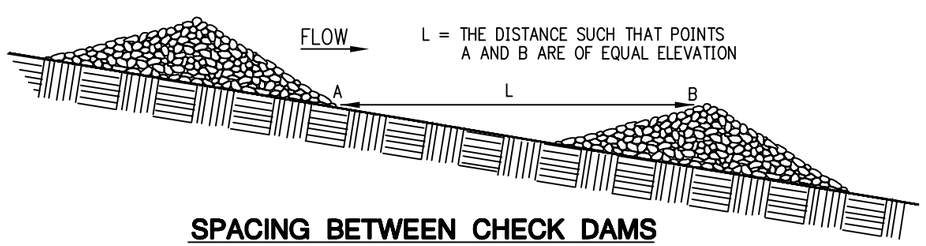

SPACING BETWEEN CHECK DAMS

NOT TO SCALE

SOURCE: MODIFIED FROM VA. DCR, 1992

ROCK CHECK DAM NOTES:

A) CONSTRUCTION SPECIFICATIONS & INSTALLATION:

1. THE DRAINAGE AREA OF THE DITCH OR SWALE BEING PROTECTED SHALL NOT EXCEED 2 ACRES WHEN A COARSE AGGREGATE IS USED ALONE AND SHALL NOT EXCEED 10 ACRES WHEN A COMBINATION OF CLASS I RIPRAP AND COARSE AGGREGATE IS USED. AN EFFORT SHOULD BE MADE TO EXTEND THE STONE TO THE TOP OF CHANNEL BANKS.
2. THE MAXIMUM HEIGHT OF THE DAM SHALL BE 3 FEET. THE CENTER OF THE CHECK DAM IS AT THE SAME ELEVATION AS THE TOP OF THE OUTER EDGES.
3. FOR ADDED STABILITY, THE BASE OF THE CHECK DAM CAN BE KEYED INTO THE SOIL APPROXIMATELY 6 INCHES.
4. THE MAXIMUM SPACING BETWEEN THE DAMS SHOULD BE SUCH THAT THE TOE OF THE UPSTREAM DAM IS AT THE SAME ELEVATION AS THE TOP OF THE DOWNSTREAM DAM.
5. STONE SHOULD BE PLACED ACCORDING TO THE CONFIGURATION TO THE LEFT. HAND OR MECHANICAL PLACEMENT WILL BE NECESSARY TO ACHIEVE COMPLETE COVERAGE OF THE DITCH OR SWALE AND TO INSURE THAT THE CENTER OF THE DAM IS LOWER THAN THE EDGES.
6. GEOTEXTILE MAY BE USED UNDER THE STONE TO PROVIDE A STABLE FOUNDATION AND TO FACILITATE REMOVAL OF THE STONE.

C) INSPECTION AND MAINTENANCE:

1. CHECK DAMS SHOULD BE CHECKED FOR SEDIMENT ACCUMULATION AFTER EACH STORM EVENT OF 1/2-INCH OR GREATER. SEDIMENT SHOULD BE REMOVED WHEN IT REACHES ONE HALF OF THE ORIGINAL HEIGHT OF THE DAM.
2. REGULAR INSPECTIONS SHOULD BE MADE TO ENSURE THAT THE CENTER OF THE DAM IS LOWER THAN THE EDGES. EROSION CAUSED BY HIGH FLOWS AROUND THE EDGES OF THE DAM SHOULD BE CORRECTED

D) REMOVAL OF PRACTICE:

UNLESS THEY ARE TO BE PERMINENT, CHECK DAMS MUST BE REMOVED WHEN THEIR USEFUL LIFE HAS BEEN COMPLETED. IN TEMPORARY DITCHES AND SWALES, CHECK DAMS SHOULD BE REMOVED AND THE DITCH FILLED WHEN THEY ARE NO LONGER NEEDED. IN PERMANENT STRUCTURES, CHECK DAMS SHOULD BE REMOVED WHEN A PERMANENT LINING CAN BE INSTALLED. IN THE CASE OF GRASS-LINED DITCHES, CHECK DAMS SHOULD BE REMOVED WHEN THE GRASS HAS MATURED SUFFICIENTLY TO PROTECT THE DITCH OR SWALE. THE AREA BENEATH THE CHECK DAMS SHOULD BE SEEDED AND MULCHED IMMEDIATELY AFTER THEY ARE REMOVED. THE USE OF FILTER CLOTH UNDERNEATH THE STONE WILL MAKE REMOVAL OF THE STONE EASIER.

AMERICAN PUBLIC WORKS ASSOCIATION	
APWA	KANSAS CITY METROPOLITAN CHAPTER
ROCK CHECK DAM	STANDARD DRAWING NUMBER ESC-15 ADOPTED:

J:\KCMOAPWA\27787\CIVIL\details\draft 4-22-03\division III\ESC-15.DWG 04-23-2003 09:18 JRA

TRIANGULAR SILT DIKE™

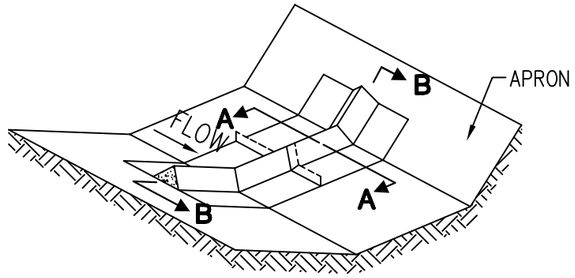

SILT DIKE UNIT CUT SECTION

NOTES:

∗ STAPLES SHALL BE PLACED WHERE THE UNITS OVERLAP AND IN THE CENTER OF THE 7' UNIT AS SHOWN ON THE DIAGRAM.

⊖ POINT 1 MUST BE HIGHER THAN POINT 2 TO ENSURE THAT WATER FLOWS OVER THE DIKE AND NOT AROUND THE ENDS.

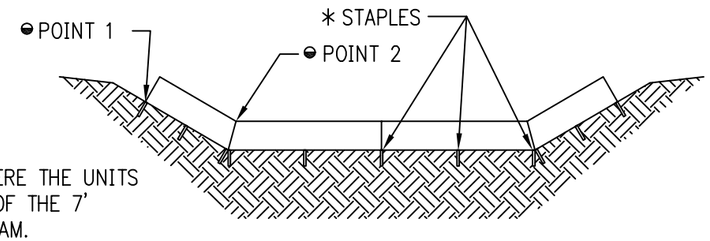

DIKE SECTION DETAIL B-B

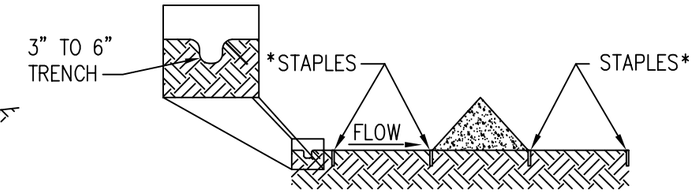

DETAIL A-A

DITCH CHECK

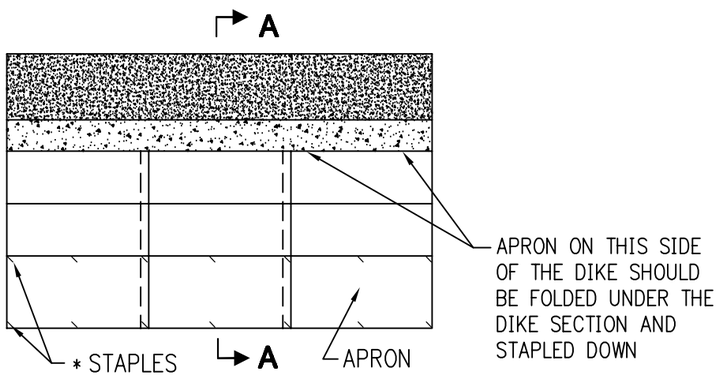

DIKE PLAN VIEW

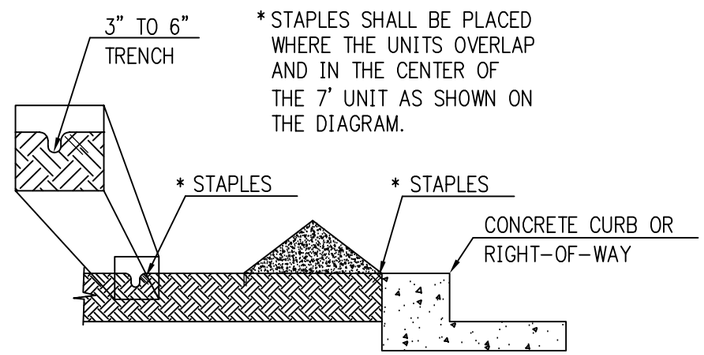

DETAIL A-A

CONTINUOUS BARRIER

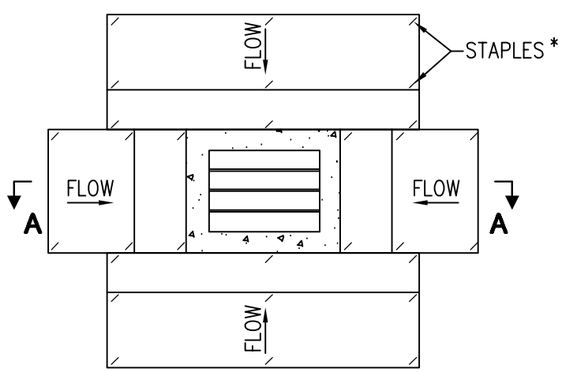

PLAN VIEW

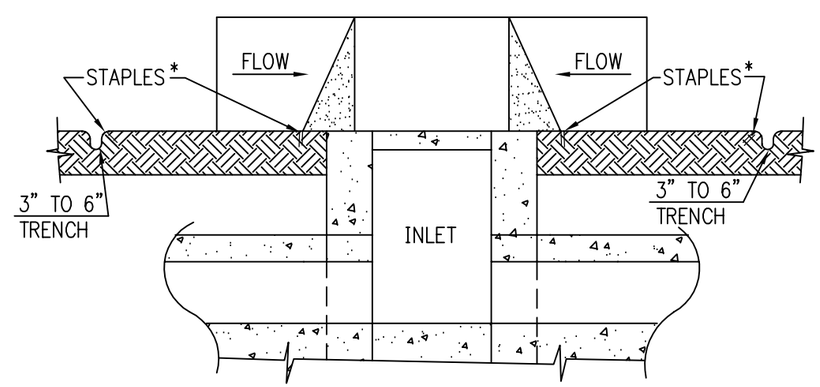

DETAIL A-A

DROP INLET

TRIANGULAR SILT DIKE™ NOTES:

A) GENERAL NOTES:

1. TRIANGULAR SILT DIKE SHALL BE TRIANGULAR SHAPED HAVING A HEIGHT OF AT LEAST EIGHT TO TEN INCHES IN THE CENTER WITH EQUAL SIDES AND A SIXTEEN- TO TWENTY- INCH BASE. THE TRIANGULAR SHAPED INNER MATERIAL SHALL BE URETHANE FOAM. THE OUTER COVER SHALL BE A WOVEN GEOTEXTILE FABRIC PLACED AROUND THE INNER MATERIAL AND ALLOWED TO EXTEND BEYOND BOTH SIDES OF THE TRIANGLE TWO TO THREE FEET.
2. LENGTH SHALL BE THREE TO SEVEN FEET. STANDARD LENGTH WILL BE SEVEN UNLESS OTHERWISE INDICATED ON THE PLANS.
3. THE DIKES SHALL BE ATTACHED TO THE GROUND WITH WIRE STAPLES. THE STAPLES SHALL BE NO. 11 GAUGE WIRE AND BE AT LEAST SIX TO EIGHT INCHES LONG. STAPLES SHALL BE PLACED AS SHOWN ON THE INSTALLATION DETAIL.

B) INSPECTION AND MAINTENANCE:

1. THE CONTRACTOR SHALL INSPECT ALL DIKES AFTER EACH RAINFALL EVENT OF 1/2 INCH OR GREATER. ANY DEFICIENCIES OR DAMAGE SHALL BE REPAIRED BY THE CONTRACTOR.
2. ACCUMULATED SEDIMENT OR DEBRIS SHALL BE REMOVED AND RELOCATED AS DIRECTED BY THE ENGINEER. IF THE DIKES ARE DAMAGED OR INADVERTENTLY MOVED DURING THE SEDIMENT REMOVAL PROCESS, THE CONTRACTOR SHALL RE-ESTABLISH CONTINUITY.

SOURCE: TRIANGULAR SILT DIKE COM., INC.

AMERICAN PUBLIC WORKS ASSOCIATION	
APWA	KANSAS CITY METROPOLITAN CHAPTER
TRIANGULAR SILT DIKE™	STANDARD DRAWING NUMBER ESC-16 ADOPTED:

J:\KCMOAPWA\27787\CIVIL\details\draft 4-22-03\division III\ESC-16.DWG 04-23-2003 09:31 JRA

GEO-RIDGE®

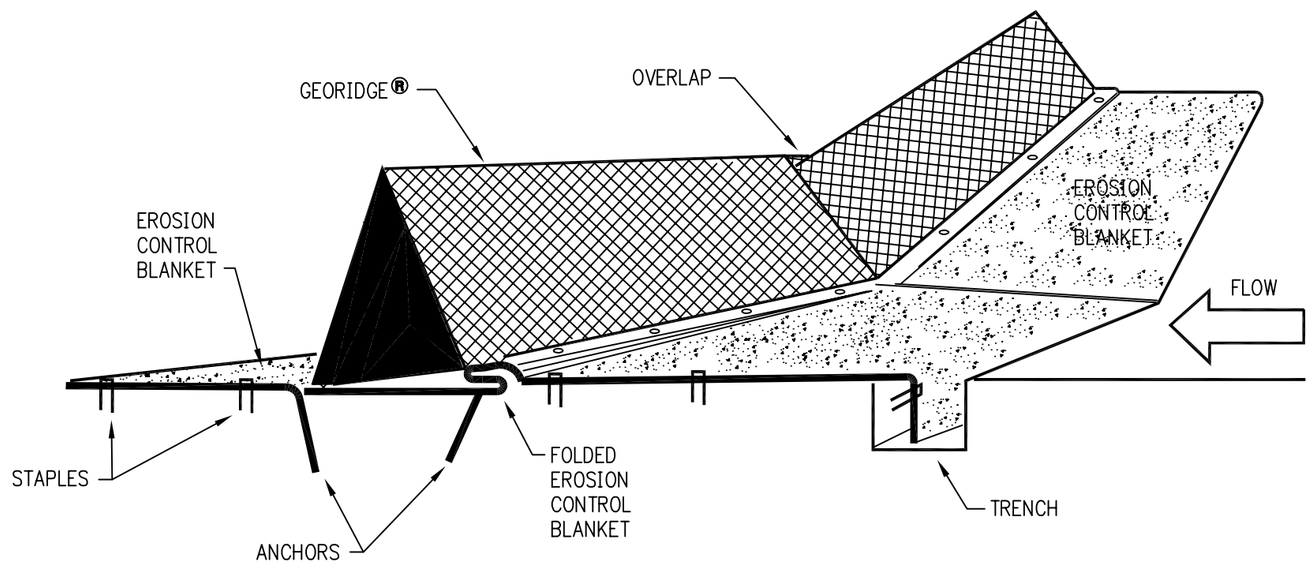

SOURCE: WWW.GEORIDGE.COM

GEO-RIDGE® NOTES:

A) GEO-RIDGE® INSTALLATION:

1. PREPARE THE CHANNEL BY FORMING THE SHAPE AND GRADE OF THE CHANNEL AND COMPACTING THE SUBGRADE.
2. APPLY SOIL ADDITIVES SUCH AS FERTILIZER AND LIME, AND SEED AS REQUIRED.
3. SURVEY LOCATIONS OF DITCH CHECKS ALONG THE LENGTH OF CHANNEL.
4. INSTALL EROSION CONTROL BLANKETS.
   a. FOR FULL CHANNEL LINING, FOLLOW MANUFACTURER'S RECOMMENDED INSTALLATION PROCEDURES. LEAVE A 4" FLAP OF EROSION CONTROL BLANKET TO FOLD OVER THE UPSTREAM LEG OF THE GEO-RIDGE.®
   b. FOR EROSION CONTROL BLANKETS UNDER THE GEO-RIDGE® ONLY, USE A COCONUT BLANKET AS A MINIMUM GRADE OF EROSION CONTROL BLANKET. INSTALL A 3.3-FOOT-WIDE EROSION CONTROL BLANKET PERPENDICULAR TO THE DIRECTION OF FLOW, CENTERED UNDER THE GEO-RIDGE®. ALLOW 4" SLACK ACROSS EROSION CONTROL BLANKET WIDTH FOR FOLDING OVER THE UPSTREAM FOOT OF THE GEO-RIDGE® BERM. PROVIDE A 6" X 6" TRENCH AT THE UPSTREAM EDGE OF THE EROSION CONTROL BLANKET. STAPLE THE EROSION CONTROL BLANKET ONTO BOTTOM OF THE TRENCH WITH MINIMUM 6" STAPLES AT 20" SPACING ON CENTER. RE-COMPACT THE SOIL INTO THE TRENCH.
5. PLACE GEO-RIDGE® BERMS PERPENDICULAR TO THE DIRECTION OF FLOW. OVERLAP PANELS BY MINIMUM 2". CUT A SLOT IN THE CREST OF THE OVERLAPPING BERM TO ALLOW CONTACT BETWEEN THE FOOT OF THE BERM AND THE SOIL.
6. SECURE BERMS WITH 10" PINS AND 1.5" WASHERS THROUGH THE FOLDED EROSION CONTROL BLANKET AND THE FOOT OF THE UNIT. THE PIN SPACING ACROSS THE WIDTH OF THE PANEL SHOULD BE 19.7" ON CENTER FOR THE UPSTREAM LEG AND 39.6" ON CENTER FOR THE DOWNSTREAM LEG.

B) INSPECTION AND MAINTENANCE:

1. THE CONTRACTOR SHALL INSPECT ALL GEO-RIDGE®AFTER EACH RAIN EVENT OF 1/2 INCH OR GREATER. ANY DEFICIANCIES OR DAMAGE SHALL BE REPAIRED BY THE CONTRACTOR.
2. ACCUMULATED SEDIMENT OR DEBRIS SHALL BE REMOVED AND RELOCATED AS DIRECTED BY THE ENGINEER. IF THE GEO-RIDGE® IS DAMAGED OR INADVERTENTLY MOVED DURING THE SEDIMENT REMOVAL PROCESS, THE CONTRACTOR SHALL RE-ESTABLISH CONTINUITY.

AMERICAN PUBLIC WORKS ASSOCIATION	
APWA	KANSAS CITY METROPOLITAN CHAPTER
GEO-RIDGE®	STANDARD DRAWING NUMBER ESC-17 ADOPTED:

J:\KCMOAPWA\27787\CIVIL\details\draft 4-22-03\division III\ESC-17.DWG 04-23-2003 09:37 JRA

SILT SAVER

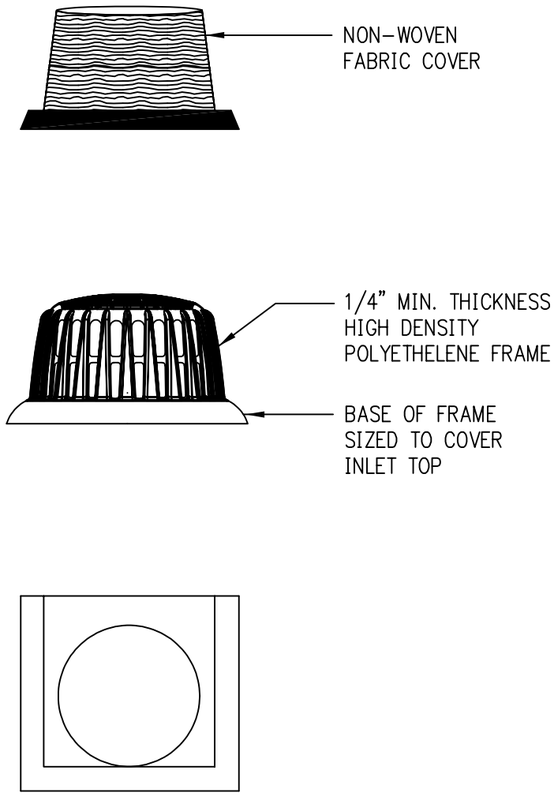

SIDE VIEW

TYPICAL SILT SAVER® COVER

NOT TO SCALE

SILT SAVER® NOTES:

A) CONSTRUCTION SEQUENCE FOR SILT SAVER®:

1. EXCAVATE APPROXIMATELY 4" TO 6" BELOW THE TOP OF THE INLET STRUCTURE.
2. PLACE THE FRAME ONTO THE INLET STRUCTURE; ENSURE THE FRAME COVERS THE STRUCTURE COMPLETLY.
3. PLACE THE FABRIC OVER THE FRAME.
4. FILL THE POCKETS WITH SOIL, #57 GRAVEL, OR EQUIVALENT; THE POCKETS SHOULD BE COMPLETELY FILLED TO ENSURE A GOOD SEAL BETWEEN THE GROUND AND THE INLET STRUCTURE.
5. BACKFILL AROUND THE FRAME AND FABRIC ASSEMBLY IS NOT REQUIRED TO COMPLETE INSTALLATION; HOWEVER BACKFILLING MAY BE NECESSARY TO COMPLETE EXCAVATION REQUIREMENTS FOR THE SITE.

B) MAINTENANCE REQUIREMENTS FOR SILT SAVER® FRAME AND FABRIC:

1. MAINTENANCE IS REQUIRED WHEN ERODED SOILS REACH A POINT OF 65% OF THE TOTAL HEIGHT OF THE FRAME OR APPROXIMATELY 7 TO 9 INCHES OF THE GREY FABRIC MATERIAL IS SHOWING.
2. REMOVE THE IMPACTED MATERIAL BY HAND OR MACHINE. DO NOT DAMAGE THE FRAME OR FABRIC.
3. BRUSH, SWEEP, OR WASH FABRIC AND INSPECT FOR ANY CUTS OR ABRASIONS; REPLACE FABRIC AS NECESSARY.
4. INSPECT FRAME FOR ANY STRESS OR DAMAGE, AND REPLACE AS NESCESSARY.
5. REFILL FABRIC POCKETS AND BACKFILL AS REQUIRED BY JOBSITE CONDITIONS.

SOURCE: WWW.SILTSAVER.COM

AMERICAN PUBLIC WORKS ASSOCIATION	
APWA	KANSAS CITY METROPOLITAN CHAPTER
SILT SAVER®	STANDARD DRAWING NUMBER ESC-18 ADOPTED:

J:\KCMOAPWA\27787\CIVIL\details\draft 4-22-03\division III\ESC-18.DWG 04-23-2003 09:43 JRA

SEDIMENT FENCE DROP INLET PROTECTION

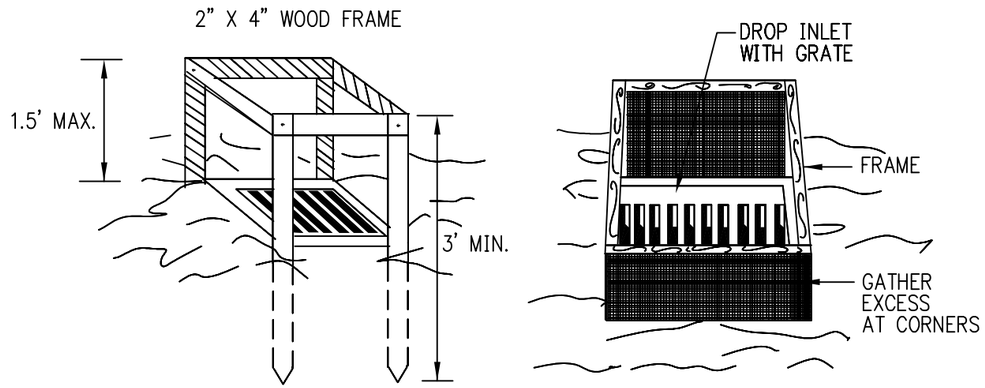

PERSPECTIVE VIEWS
NOT TO SCALE

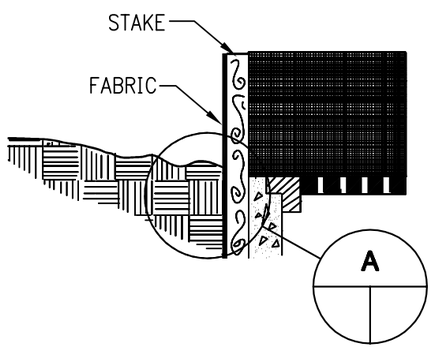

ELEVATION OF STAKE AND FABRIC ORIENTATION

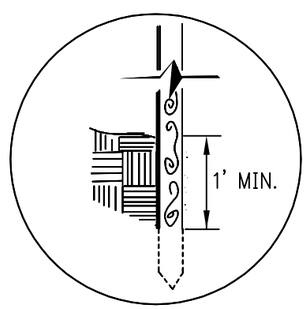

DETAIL A
NOT TO SCALE

SEDIMENT FENCE DROP INLET PROTECTION NOTES:

A) CONSTRUCTION SPECIFICATIONS:

1. SEDIMENT FENCE SHALL CONFORM TO THE CONSTRUCTION SPECIFICATIONS FOR EXTRA STRENGTH FOUND IN THE TABLE BELOW AND SHALL BE CUT FROM A CONTINUOUS ROLL TO AVOID JOINTS.

   PHYSICAL PROPERTIES OF FABRIC IN SEDIMENT FENCE:

PHYSICAL PROPERTY	TEST	REQUIREMENTS
FILTERING EFFICIENCY	ASTM 5141	75%
TENSILE STRENGTH AT 20% (MAX.) ELONGATION*	ASTM 4632 AASHTO M288-96	EXTRA STRENGTH - 50 LBS./LINEAR INCH
FLOW RATE	ASTM 5141	0.2 GAL./SQ.FT/ MINUTE**
ULTRAVIOLET RADIATION STABILITY %	ASTM D 4355	90%

   * REQUIREMENTS REDUCED BY 50% AFTER SIX MONTHS OF INSTALLATION.
   ** HIGH POROSITY FABRIC MADE BY BETTER SUITED FOR THIS DEVICE.

2. FOR STAKES, USE 2X4 WOOD OR EQUIVALENT METAL WITH A MINIMUM LENGTH OF 3 FEET.
3. SPACE STAKES EVENLY AROUND THE PERIMETER OF THE INLET A MAXIMUM OF 3 FEET APART, AND SECURELY DRIVE THEM INTO THE GROUND, APPROXIMATELY 18 INCHES DEEP.
4. TO PROVIDE NEEDED STABILITY TO THE INSTALLATION, FRAME WITH 2X4 WOOD STRIPS AROUND THE CREST OF THE OVERFLOW AREA AT A MAXIMUM OF 1.5 FEET ABOVE THE DROP INLET CREST.
5. PLACE THE BOTTOM 12 INCHES OF THE FABRIC IN A TRENCH AND BACKFILL THE TRENCH WITH 12-INCHES OF COMPACTED SOIL.
6. FASTEN FABRIC SECURELY BY STAPLES, OR WIRE IT TO THE STAKES AND FRAME. JOINTS MUST BE OVERLAPPED TO THE NEXT STAKE.
7. IT MAY BE NECESSARY TO BUILD A TEMPORARY DIKE ON THE DOWNSLOPE SIDE OF THE STRUCTURE TO PREVENT BYPASS FLOW.

B) INSPECTION AND MAINTENANCE:

1. THE STRUCTURE SHALL BE INSPECTED AFTER EACH RAIN EVENT OF 1/2 INCH OR GREATER AND REPAIRS MADE AS NEEDED.
2. SEDIMENT SHALL BE REMOVED AND THE TRAP RESTORED TO ITS ORIGINAL DIMENSIONS WHEN THE SEDIMENT HAS ACCUMULATED TO ONE HALF THE DESIGN DEPTH OF THE TRAP. REMOVED SEDIMENT SHALL BE DEPOSITED IN A SUITABLE AREA AND IN SUCH A MANNER THAT IT WILL NOT ERODE.
3. STRUCTURES SHALL BE REMOVED AND THE AREA STABILIZED WHEN THE REMAINING DRAINAGE AREA HAS BEEN PROPERLY STABILIZED.

SOURCE: MODIFIED FROM VA. DCR, 1992

AMERICAN PUBLIC WORKS ASSOCIATION	
APWA	KANSAS CITY METROPOLITAN CHAPTER
SEDIMENT FENCE DROP INLET PROTECTION	STANDARD DRAWING NUMBER ESC-19 ADOPTED:

J:\KCMOAPWA\27787\CIVIL\details\draft 4-22-03\division III\ESC-19.DWG 04-23-2003 09:48 JRA

GRAVEL AND WIRE MESH DROP INLET SEDIMENT TRAP

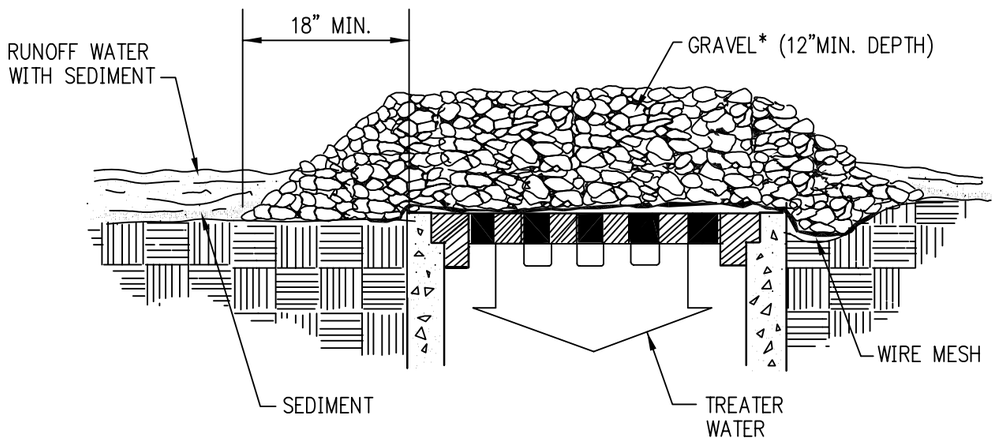

NOTE:

* USE CLEAN GRAVEL, 1/2" DIAMETER.

GRAVEL AND WIRE MESH DROP INLET SEDIMENT TRAP NOTES:

A) GENERAL NOTES:

1. WIRE MESH SHALL BE LAID OVER THE DROP INLET SO THAT THE WIRE EXTENDS A MINIMUM OF 1 FOOT BEYOND EACH SIDE OF THE INLET STRUCTURE. WIRE MESH WITH 1/2-INCH OPENINGS SHALL BE USED. IF MORE THAN ONE STRIP OF MESH IS NECESSARY, THE STRIPS SHALL BE OVERLAPPED.

2. COARSE AGGREGATE SHALL BE PLACED OVER THE WIRE MESH. THE DEPTH OF STONE SHALL BE AT LEAST 12-INCHES OVER THE ENTIRE INLET OPENING. THE STONE SHALL EXTEND BEYOND THE INLET OPENING AT LEAST 18-INCHES ON ALL SIDES.

3. IF THE STONE BECOMES CLOGGED WITH SEDIMENT SO THAT IT NO LONGER ADEQUATELY PERFORMS ITS FUNCTION, THE STONES MUST BE PULLED AWAY FROM THE INLET AND CLEANED OR REPLACED.

B) INSPECTION AND MAINTENANCE:

1. THE STRUCTURE SHALL BE INSPECTED AFTER EACH RAIN EVENT OF 1/2 INCH OR GREATER AND REPAIRS MADE AS NEEDED.

2. SEDIMENT SHALL BE REMOVED AND THE TRAP RESTORED TO ITS ORIGINAL DIMENSIONS WHEN THE SEDIMENT HAS ACCUMULATED TO ONE HALF THE DESIGN DEPTH OF THE TRAP. REMOVED SEDIMENT SHALL BE DEPOSITED IN A SUITABLE AREA AND IN SUCH A MANNER THAT IT WILL NOT ERODE.

3. STRUCTURES SHALL BE REMOVED AND THE AREA STABILIZED WHEN THE REMAINING DRAINAGE AREA HAS BEEN PROPERLY STABILIZED.

SOURCE: MODIFIED FROM VA. DCR, 1992

AMERICAN PUBLIC WORKS ASSOCIATION	
APWA	KANSAS CITY METROPOLITAN CHAPTER
GRAVEL AND WIRE MESH DROP INLET SEDIMENT TRAP	STANDARD DRAWING NUMBER ESC-20 ADOPTED:

J:\KCMOAPWA\27787\CIVIL\details\draft 4-22-03\division III\ESC-20.DWG 04-23-2003 09:54 JRA

BLOCK AND GRAVEL DROP INLET SEDIMENT TRAP

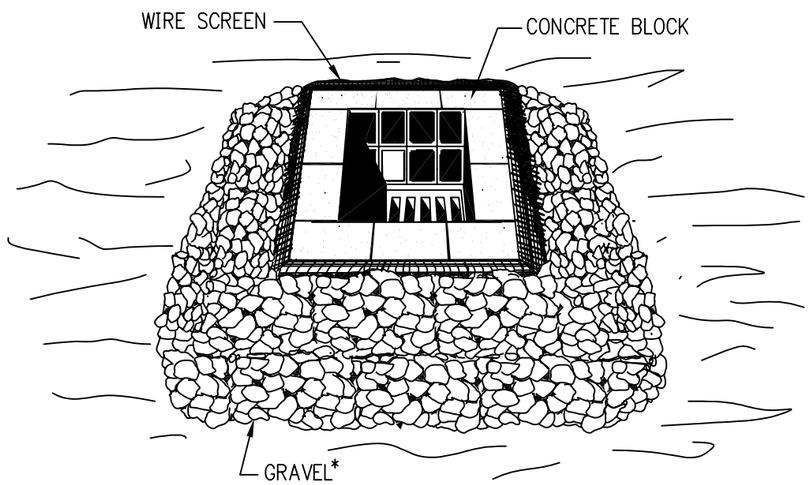

NOTE:

* USE CLEAN GRAVEL, 1/2" TO 1" DIAMETER

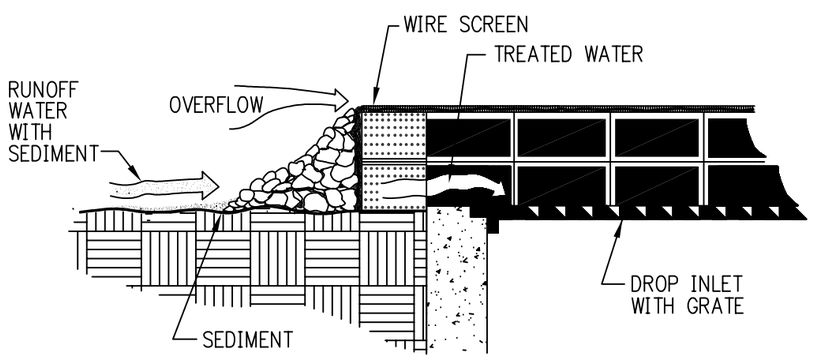

CROSS SECTION

BLOCK AND GRAVEL DROP INLET SEDIMENT TRAP NOTES:

A) GENERAL NOTES:

1. PLACE CONCRETE BLOCKS LENGTHWISE ON THEIR SIDES IN A SINGLE ROW AROUND THE PERIMETER OF THE INLET WITH THE ENDS OF THE ADJACENT BLOCKS ABUTTING. THE HEIGHT OF THE BARRIER CAN BE VARIED, DEPENDING ON THE DESIGN NEEDS, BY STACKING COMBINATIONS OF 4-INCH, 8-INCH, AND 12-INCH BLOCKS. THE BARRIER OF BLOCKS SHALL BE AT LEAST 12 INCHES HIGH AND NO GREATER THAN 24 INCHES HIGH.

2. WIRE MESH, OR WEBBING, SHALL BE PLACED OVER THE OUTSIDE VERTICAL FACE OF THE CONCRETE BLOCKS TO PREVENT STONE FROM BEING WASHED THROUGH THE HOLES IN THE BLOCKS. WIRE MESH WITH 1/2-INCH OPENINGS SHALL BE USED.

3. STONE SHALL BE PILED AGAINST THE WIRE TO THE TOP OF THE BLOCK BARRIER.

4. IF THE STONE BECOMES CLOGGED WITH SEDIMENT SO THAT IT NO LONGER ADEQUATELY PERFORMS ITS FUNCTION, THE STONE MUST BE PULLED AWAY FROM THE BLOCKS AND CLEANED OR REPLACED.

B) INSPECTION AND MAINTENANCE:

1. THE STRUCTURE SHALL BE INSPECTED AFTER EACH RAIN EVENT OF 1/2 INCH OR GREATER AND REPAIRS MADE AS NEEDED.

2. SEDIMENT SHALL BE REMOVED AND THE TRAP RESTORED TO ITS ORIGINAL DIMENSIONS WHEN THE SEDIMENT HAS ACCUMULATED TO ONE HALF THE DESIGN DEPTH OF THE TRAP. REMOVED SEDIMENT SHALL BE DEPOSITED IN A SUITABLE AREA SO THAT IT WILL NOT ERODE.

3. STRUCTURES SHALL BE REMOVED AND THE AREA STABILIZED WHEN THE REMAINING DRAINAGE AREA HAS BEEN PROPERLY STABILIZED.

SOURCE: MODIFIED FROM VA. DCR, 1992

AMERICAN PUBLIC WORKS ASSOCIATION	
APWA	KANSAS CITY METROPOLITAN CHAPTER
BLOCK AND GRAVEL DROP INLET SEDIMENT TRAP	STANDARD DRAWING NUMBER ESC-21 ADOPTED:

J:\KCMOAPWA\27787\CIVIL\details\draft 4-22-03\division III\ESC-21.DWG 04-23-2003 09:58 JRA

EXCAVATED DROP INLET SEDIMENT TRAP

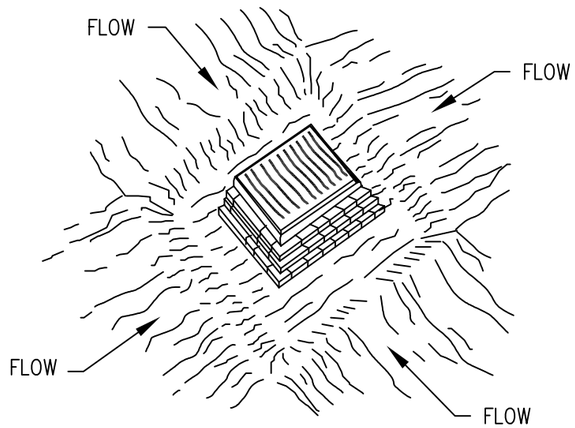

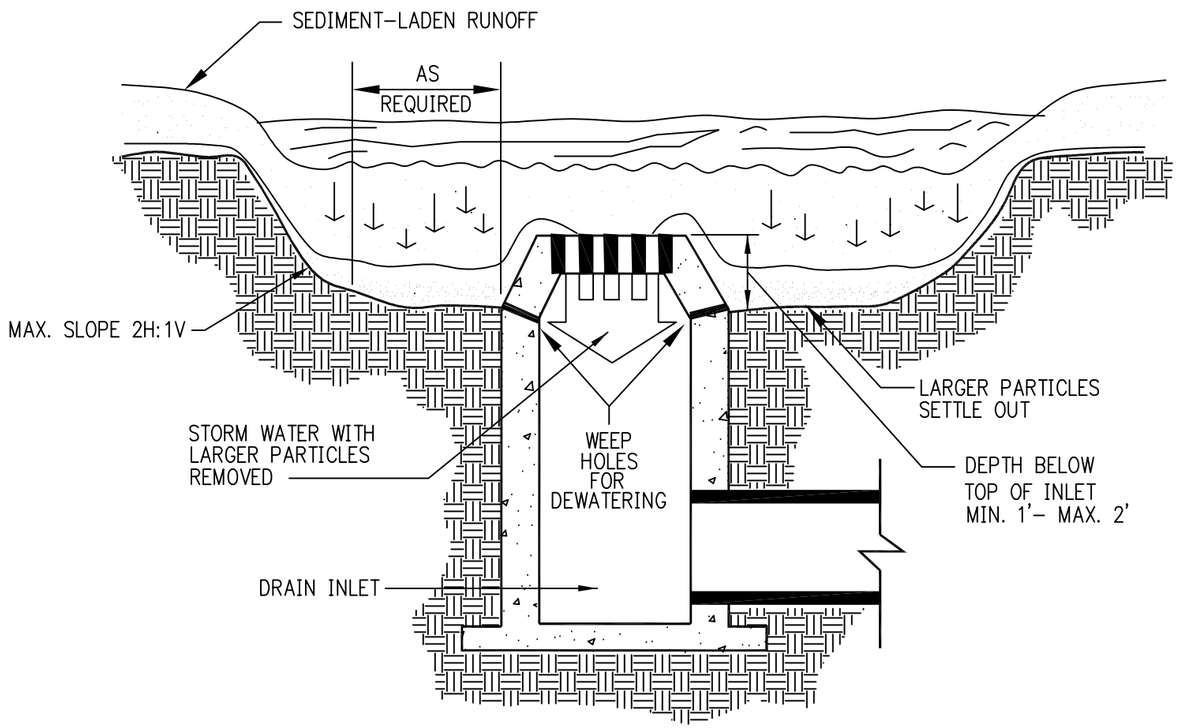

CROSS SECTION
NOT TO SCALE

SOURCE: MODIFIED FROM VA. DCR, 1992

EXCAVATED DROP INLET SEDIMENT TRAP NOTES:

A) GENERAL NOTES:

1. THE EXCAVATED TRAP SHALL BE SIZED TO PROVIDE A MINIMUM STORAGE CAPACITY CALCULATED AT THE RATE OF 134 CUBIC YARDS PER ACRE OF DRAINAGE AREA. A TRAP SHALL BE NO LESS THAN 1 FOOT NOR MORE THAN 2 FEET DEEP MEASURED FROM THE TOP OF THE INLET STRUCTURE. SIDE SLOPES SHALL NOT BE STEEPER THAN 2H:1V.

2. THE SLOPE OF THE BASIN MAY VARY TO FIT THE DRAINAGE AREA AND TERRAIN. CHECK TRAP EFFICIENCY AND MAKE MODIFICATIONS AS NECESSARY TO ENSURE SATISFACTORY TRAPPING OF SEDIMENT. WHERE AN INLET IS LOCATED SO AS TO RECEIVE CONCENTRATED FLOWS, SUCH AS IN A HIGHWAY MEDIAN, IT IS RECOMMENDED THAT THE BASIN HAVE A RECTANGULAR SHAPE IN A 2:1, LENGTH:WIDTH RATIO, WITH THE LENGTH ORIENTED IN THE DIRECTION OF THE FLOW.

B) INSPECTION AND MAINTENANCE:

1. THE STRUCTURE SHALL BE INSPECTED AFTER EACH RAIN EVENT OF 1/2-INCH OR GREATER AND REPAIRS MADE AS NEEDED.

2. SEDIMENT SHALL BE REMOVED AND THE TRAP RESTORED TO ITS ORIGINAL DIMENSIONS WHEN THE SEDIMENT HAS ACCUMULATED TO ONE HALF THE DESIGN DEPTH OF THE TRAP. REMOVED SEDIMENT SHALL BE DEPOSITED IN A SUITABLE AREA SO THAT IT WILL NOT ERODE.

3. STRUCTURES SHALL BE REMOVED AND THE AREA STABILIZED WHEN THE REMAINING DRAINAGE AREA HAS BEEN PROPERLY STABILIZED.

AMERICAN PUBLIC WORKS ASSOCIATION	
APWA	KANSAS CITY METROPOLITAN CHAPTER
EXCAVATED DROP INLET SEDIMENT TRAP	STANDARD DRAWING NUMBER ESC-22 ADOPTED:

J:\KCMOAPWA\27787\CIVIL\details\draft 4-22-03\division III\ESC-22.DWG 04-23-2003 10:04 JRA

SOD DROP INLET SEDIMENT TRAP

NOT TO SCALE

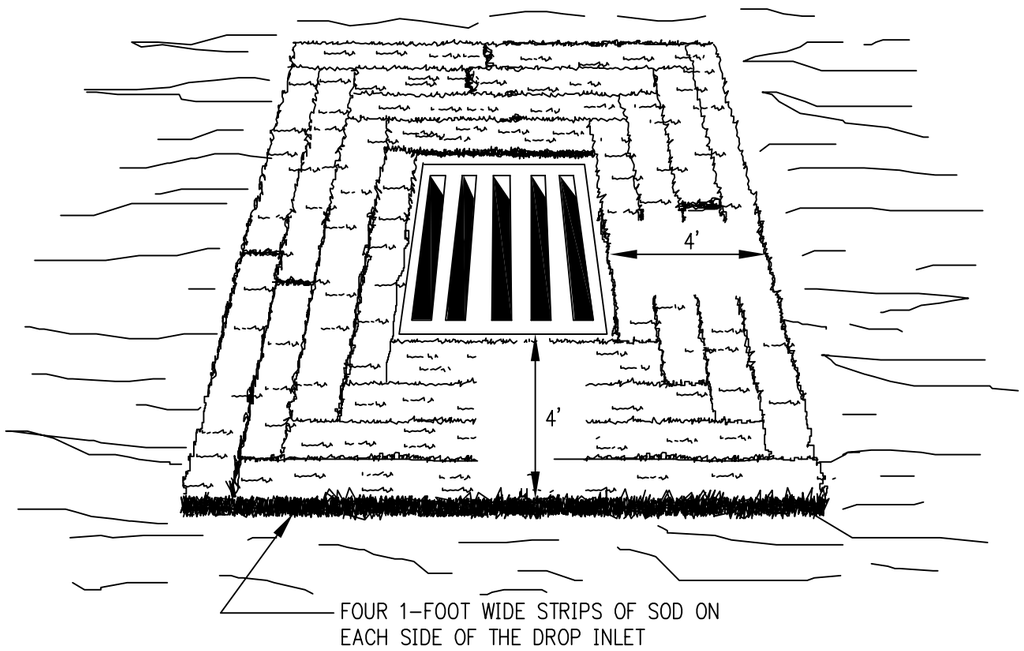

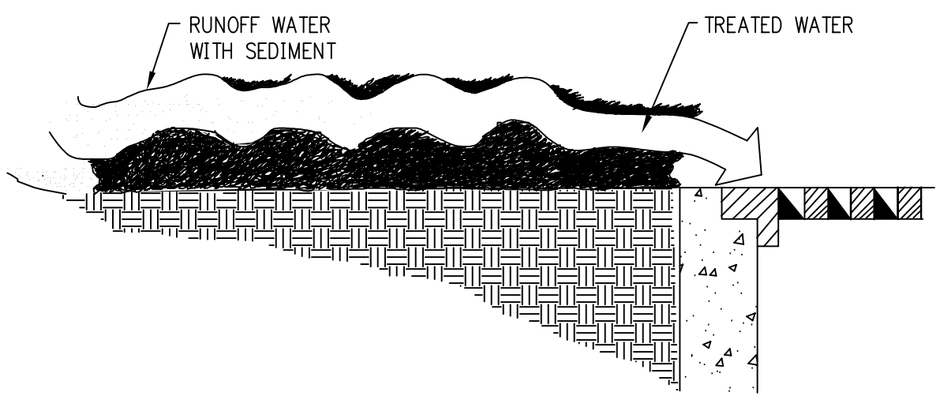

CROSS SECTION

SOD DROP INLET SEDIMENT TRAP NOTES:

A) GENERAL NOTES:

1. SOIL SHALL BE PREPARED AND SOD INSTALLED ACCORDING TO THE SPECIFICATIONS IN ESC-02.
2. SOD SHALL BE PLACED TO FORM A TURF MAT COVERING THE SOIL FOR A DISTANCE TO THE INLET STRUCTURE.

B) INSPECTION AND MAINTENANCE:

1. THE STRUCTURE SHALL BE INSPECTED AFTER EACH RAIN EVENT 1/2-INCH OR GREATER AND REPAIRS MADE AS NEEDED.

SOURCE: MODIFIED FROM VA. DCR, 1992

AMERICAN PUBLIC WORKS ASSOCIATION	
APWA	KANSAS CITY METROPOLITAN CHAPTER
SOD DROP INLET SEDIMENT TRAP	STANDARD DRAWING NUMBER ESC-23 ADOPTED:

J:\KCMOAPWA\27787\CIVIL\details\draft 4-22-03\division III\ESC-23.DWG 04-23-2003 10:06 JRA

GRAVEL CURB INLET SEDIMENT TRAP

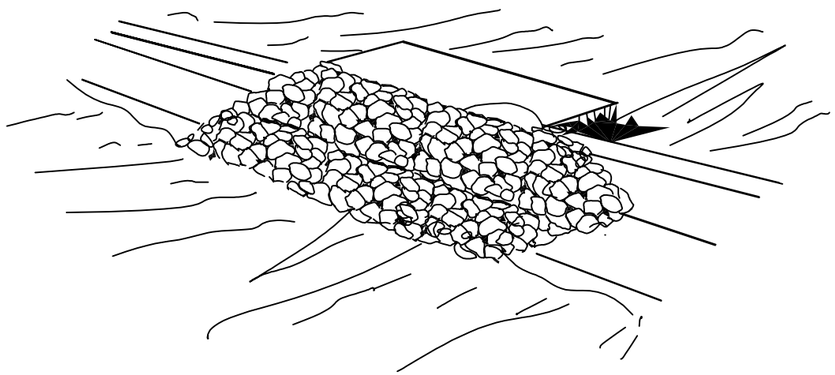

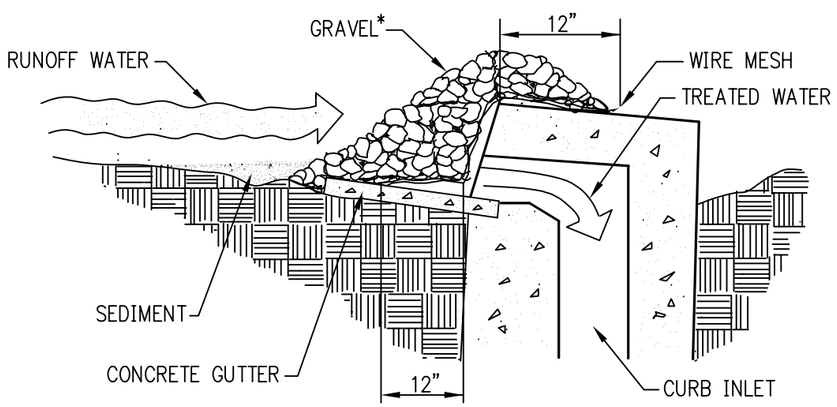

CROSS SECTION
NOT TO SCALE

NOTE:

*USE CLEAN GRAVEL 1/2" TO 1" IN DIAMETER.

GRAVEL CURB INLET SEDIMENT TRAP NOTES:

A) GENERAL NOTES:

1. WIRE MESH WITH 1/2-INCH OPENINGS SHALL BE PLACED OVER THE CURB INLET OPENING SO THAT AT LEAST 12 INCHES OF WIRE EXTENDS ACROSS THE INLET COVER AND AT LEAST 12 INCHES OF WIRE EXTENDS ACROSS THE CONCRETE GUTTER FROM THE INLET OPENING.

2. STONE SHALL BE PILED AGAINST THE WIRE SO AS TO ANCHOR IT AGAINST THE GUTTER AND INLET COVER AND TO COVER THE INLET OPENING COMPLETELY.

3. IF THE STONE BECOMES CLOGGED WITH SEDIMENT SO THAT IT NO LONGER ADEQUATELY PERFORMS ITS FUNCTION, THE STONE MUST BE PULLED AWAY FROM THE BLOCK AND CLEANED OR REPLACED.

B) INSPECTION AND MAINTENANCE:

1. THE STRUCTURE SHALL BE INSPECTED AFTER EACH RAIN EVENT OF 1/2-INCH OR GREATER AND REPAIRS MADE AS NEEDED.

2. SEDIMENT SHALL BE REMOVED AND THE TRAP RESTORED TO ITS ORIGINAL DIMENSIONS WHEN THE SEDIMENT HAS ACCUMULATED TO ONE HALF THE DESIGN DEPTH OF THE TRAP. REMOVED SEDIMENT SHALL BE DEPOSITED IN A SUITABLE AREA SO THAT IT WILL NOT ERODE.

3. STRUCTURES SHALL BE REMOVED AND THE AREA STABILIZED WHEN THE REMAINING DRAINAGE AREA HAS BEEN PROPERLY STABILIZED.

SOURCE: MODIFIED FROM VA. DCR, 1992

AMERICAN PUBLIC WORKS ASSOCIATION	
APWA	KANSAS CITY METROPOLITAN CHAPTER
GRAVEL CURB INLET SEDIMENT TRAP	STANDARD DRAWING NUMBER ESC-24 ADOPTED:

J:\KCMOAPWA\27787\CIVIL\details\draft 4-22-03\division III\ESC-24.DWG 04-23-2003 10:09 JRA

WOODEN WEIR CURB INLET PROTECTION

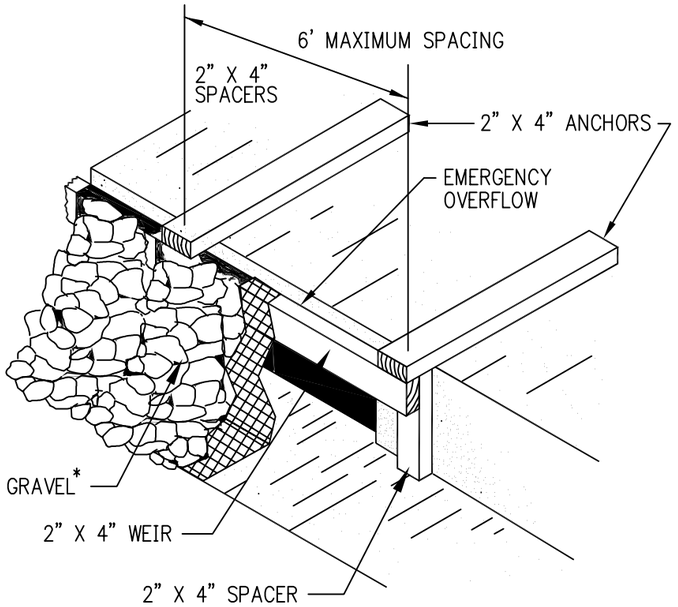

PERSPECTIVE VIEW
NOT TO SCALE

NOTE:
*GRAVEL SHALL BE COARSE AGGREGATE FROM 1/2" TO 1" IN DIAMETER.

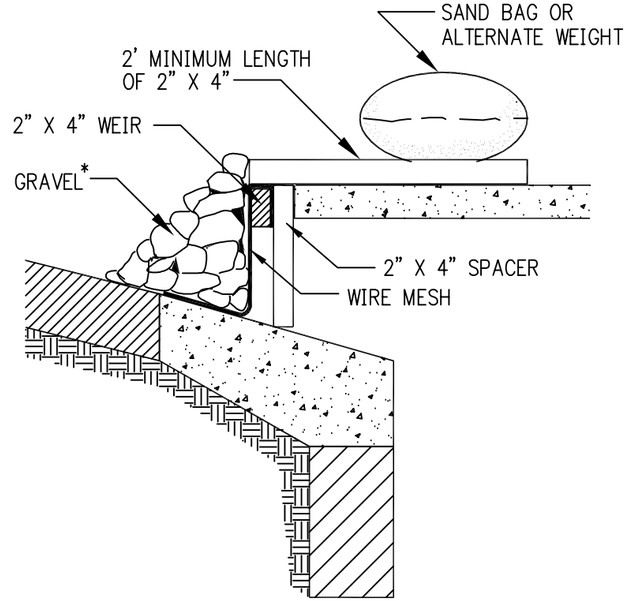

CROSS SECTION
NOT TO SCALE

WOODEN WEIR CURB INLET PROTECTION NOTES:

A) GENERAL NOTES:

1. ATTACH A CONTINUOUS PIECE OF WIRE MESH THAT IS 30-INCH MINIMUM WIDTH X INLET THROAT LENGTH PLUS 4 FEET TO A 2 X 4 WOODEN WEIR WITH LENGTH EQUAL TO THROAT LENGTH PLUS 2 FEET. WOOD SHOULD BE CONSTRUCTION GRADE LUMBER.
2. PLACE A PIECE OF APPROVED EXTRA-STRENGTH GEOTEXTILE OF THE SAME DIMENSIONS AS THE WIRE MESH OVER THE WIRE MESH AND SECURELY ATTACH IT TO THE 2 X 4 WOODEN WEIR.
3. SECURELY NAIL THE 2 X 4 WEIR TO THE 9-INCH LONG VERTICAL SPACERS WHICH ARE TO BE LOCATED BETWEEN THE WEIR AND INLET FACE AT A MAXIMUM 6-FOOT SPACING.
4. PLACE THE ASSEMBLY AGAINST THE INLET THROAT AND NAIL A MINIMUM OF 2-FOOT LENGTHS OF 2 X 4 BOARD TO THE TOP OF THE WEIR AT SPACER LOCATIONS. THESE 2 X 4 ANCHORS SHALL EXTEND ACROSS THE INLET TOPS AND BE HELD IN PLACE BY SANDBAGS OR ALTERNATE WEIGHT.
5. THE ASSEMBLY SHALL BE PLACED SO THAT THE END SPACERS ARE A MINIMUM OF 1 FOOT BEYOND BOTH ENDS OF THE THROAT OPENING.
6. FORM THE WIRE MESH AND GEOTEXTILE TO THE CONCRETE GUTTER AND AGAINST THE FACE OF CURB ON BOTH SIDES OF THE INLET. PLACE COARSE AGGREGATE OVER THE WIRE MESH AND GEOTEXTILE TO PREVENT WATER FROM ENTERING THE INLET UNDER OR AROUND THE GEOTEXTILE.
7. THIS TYPE OF PROTECTION MUST BE INSPECTED FREQUENTLY AND THE GEOTEXTILE AND STONE REPLACED WHEN CLOGGED WITH SEDIMENT.
8. ASSURE THAT STORM FLOW DOES NOT BYPASS INLET BY INSTALLING TEMPORARY EARTH OR ASPHALT DIKES DIRECTING FLOW INTO INLET.

B) INSPECTION AND MAINTENANCE:

1. THE STRUCTURE SHALL BE INSPECTED AFTER EACH RAIN EVENT OF 1/2-INCH OR GREATER AND REPAIRS SHALL BE MADE AS NEEDED.
2. SEDIMENT SHALL BE REMOVED AND THE TRAP RESTORED TO ITS ORIGINAL DIMENSIONS WHEN THE SEDIMENT HAS ACCUMULATED TO ONE HALF THE DESIGN DEPTH OF THE TRAP. REMOVED SEDIMENT SHALL BE DEPOSITED IN A SUITABLE AREA SO THAT IT WILL NOT ERODE.
3. STRUCTURES SHALL BE REMOVED AND THE AREA STABILIZED WHEN THE REMAINING DRAINAGE AREA HAS BEEN PROPERLY STABILIZED.

SOURCE: MODIFIED FROM VA. DCR, 1992

AMERICAN PUBLIC WORKS ASSOCIATION		
APWA	KANSAS CITY METROPOLITAN CHAPTER	
WOODEN WEIR CURB INLET PROTECTION	STANDARD DRAWING NUMBER ESC-25	
	ADOPTED:	

J:\KCMOAPWA\27787\CIVIL\details\draft 4-22-03\division III\ESC-25.DWG 04-23-2003 10:17 JRA

BLOCK AND GRAVEL CURB INLET PROTECTION

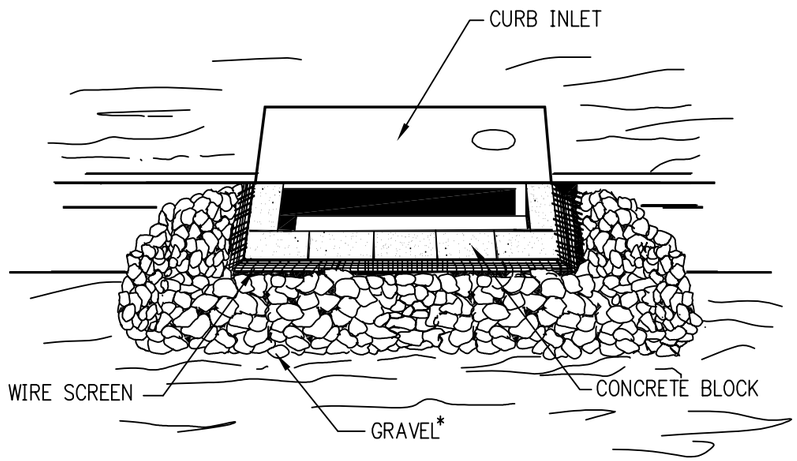

* GRAVEL SHALL BE COARSE AGGREGATE FROM 1/2" TO 1" IN DIAMETER

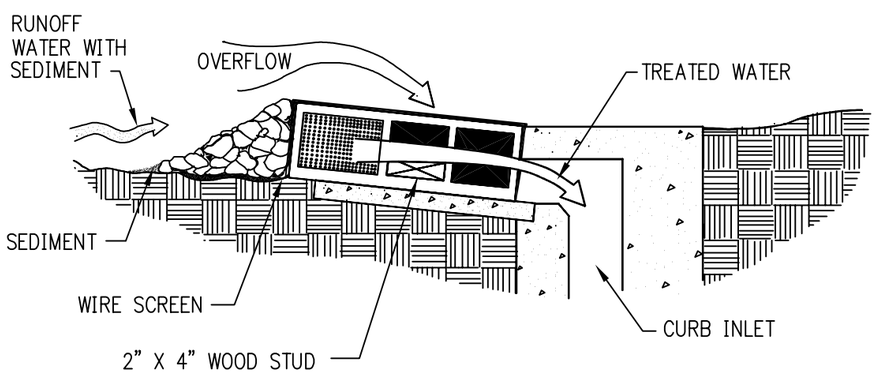

CROSS SECTION
NOT TO SCALE

BLOCK AND GRAVEL CURB INLET PROTECTION NOTES:

A) GENERAL NOTES:

1. TWO CONCRETE BLOCKS SHALL BE PLACED ON THEIR SIDES ABUTTING THE CURB AT EITHER SIDE OF THE INLET OPENING.
2. A 2 X 4 STUD SHALL BE CUT AND PLACED THROUGH THE OUTER HOLES OF EACH SPACER BLOCK TO HELP KEEP THE FRONT BLOCKS IN PLACE.
3. CONCRETE BLOCKS SHALL BE PLACED ON THEIR SIDES ACROSS THE FRONT OF THE INLET AND ABUTTING THE SPACER BLOCKS.
4. WIRE MESH WEBBING SHALL BE PLACED OVER THE OUTSIDE VERTICAL FACE OF THE CONCRETE BLOCKS TO PREVENT STONE FROM BEING WASHED THROUGH THE HOLES IN THE BLOCKS. WIRE MESH WITH 1/2-INCH OPENINGS SHALL BE USED.
5. COARSE AGGREGATE SHALL BE PILED AGAINST THE WIRE TO THE TOP OF THE BARRIER.
6. IF THE STONE BECOMES CLOGGED WITH SEDIMENT SO THAT IT NO LONGER ADEQUATELY PERFORMS ITS FUNCTION, THE STONE MUST BE PULLED AWAY FROM THE BLOCKS AND CLEANED OR REPLACED.

B) INSPECTION AND MAINTENANCE:

1. THE STRUCTURE SHALL BE INSPECTED AFTER EACH RAIN EVENT OF 1/2-INCH OR GREATER, AND REPAIRS SHALL BE MADE AS NEEDED.
2. SEDIMENT SHALL BE REMOVED AND THE TRAP RESTORED TO ITS ORIGINAL DIMENSIONS WHEN THE SEDIMENT HAS ACCUMULATED TO ONE HALF THE DESIGN DEPTH OF THE TRAP. REMOVED SEDIMENT SHALL BE DEPOSITED IN A SUITABLE AREA SO THAT IT WILL NOT ERODE.
3. STRUCTURES SHALL BE REMOVED AND THE AREA STABILIZED WHEN THE REMAINING DRAINAGE AREA HAS BEEN PROPERLY STABILIZED.

SOURCE: MODIFIED FROM VA. DCR, 1992

AMERICAN PUBLIC WORKS ASSOCIATION	
APWA	KANSAS CITY METROPOLITAN CHAPTER
BLOCK AND GRAVEL CURB INLET PROTECTION	STANDARD DRAWING NUMBER ESC-26
	ADOPTED:

J:\KCMOAPWA\27787\CIVIL\details\draft 4-22-03\division III\ESC-26.DWG 04-23-2003 10:20 JRA

CULVERT INLET SEDIMENT TRAP

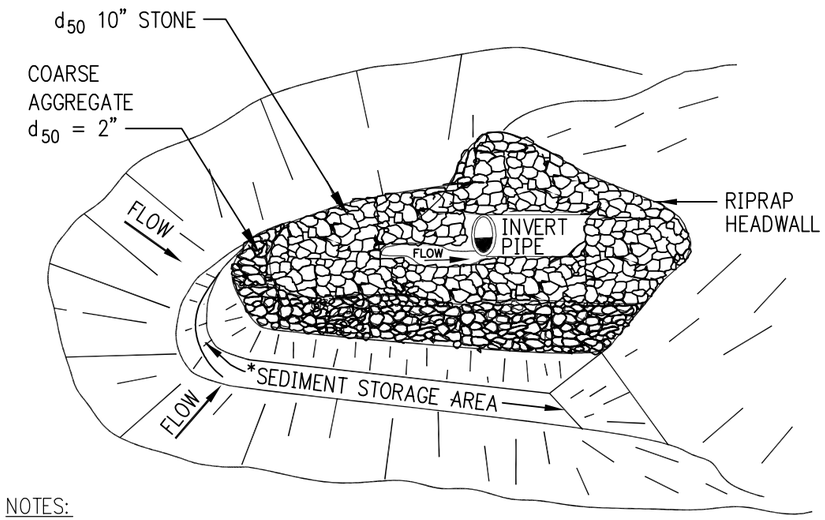

NOTES:

1. STORAGE REQUIREMENTS EQUIVALENT TO THAT OF TEMPORARY SEDIMENT TRAP.
2. 67 C.Y./ACRE WET STORAGE BELOW BASE OF STONE.
3. 67 C.Y./ACRE DRY STORAGE FROM BASE OF STONE TO TOP OF STONE BERM.

PERSPECTIVE VIEW

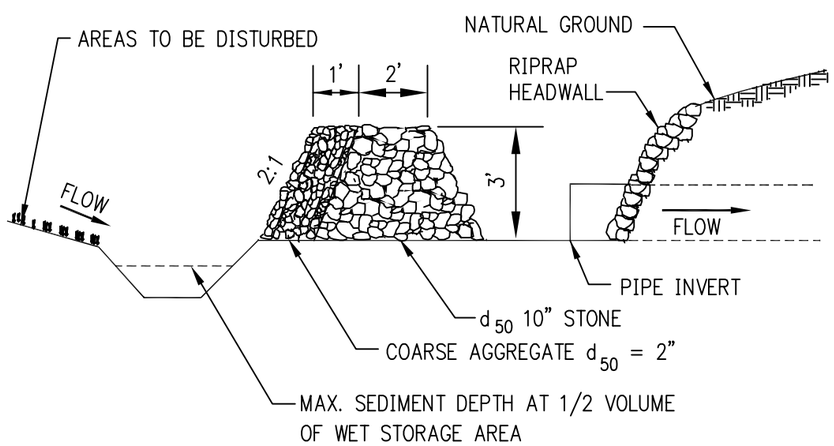

ELEVATION

NOT TO SCALE

SOURCE: MODIFIED FROM VA. DCR, 1992

CULVERT INLET SEDIMENT TRAP NOTES:

A) CONSTRUCTION SPECIFICATIONS:

1. GEOMETRY OF THE DESIGN WILL BE A HORSESHOE SHAPE AROUND THE CULVERT INLET.
2. THE TOE OF RIPRAP SHALL BE NO CLOSER THAN 24" FROM THE CULVERT OPENING TO PROVIDE AN ACCEPTABLE EMERGENCY OUTLET FOR FLOWS FROM LARGER STORM EVENTS.
3. ALL CONSTRUCTION SPECIFICATIONS FOUND WITHIN TEMPORARY SEDIMENT TRAP SPECIFICATIONS APPLY TO THIS PRACTICE.
4. THE PROPER INSTALLATION OF THE CULVERT INLET SEDIMENT TRAP IS A VIABLE SUBSTITUTE FOR THE INSTALLATION OF THE TEMPORARY SEDIMENT TRAP.

B) INSPECTION AND MAINTENANCE:

1. THE STRUCTURE SHALL BE INSPECTED AFTER EACH RAIN EVENT OF 1/2-INCH OR GREATER, AND REPAIRS SHALL BE MADE AS NEEDED.
2. AGGREGATE SHALL BE REPLACED OR CLEANED WHEN INSPECTION REVEALS THAT CLOGGED VOIDS ARE CAUSING PONDING PROBLEMS WHICH INTERFERE WITH ON-SITE CONSTRUCTION.
3. SEDIMENT SHALL BE REMOVED AND THE IMPOUNDMENT RESTORED TO ITS ORIGINAL DIMENSIONS WHEN SEDIMENT HAS ACCUMULATED TO ONE HALF THE DESIGN DEPTH. REMOVED SEDIMENT SHALL BE DEPOSITED IN A SUITABLE AREA SO THAT IT WILL NOT ERODE AND CAUSE SEDIMENTATION PROBLEMS.
4. TEMPORARY STRUCTURES SHALL BE REMOVED WHEN THEY HAVE SERVED THEIR USEFUL PURPOSE BUT NOT BEFORE THE UPSLOPE AREA HAS BEEN PERMANENTLY STABILIZED.

C) GENERAL GUIDELINES:

1. THE INLET PROTECTION DEVICE SHALL BE CONSTRUCTED IN A MANNER THAT WILL FACILITATE CLEAN-OUT AND DISPOSAL OF TRAPPED SEDIMENT AND MINIMIZE INTERFERENCE WITH CONSTRUCTION ACTIVITIES.
2. THE INLET PROTECTION DEVICES SHALL BE CONSTRUCTED IN SUCH A MANNER THAT ANY RESULTANT PONDING STORMWATER WILL NOT CAUSE EXCESSIVE INCONVENIENCE OR DAMAGE TO ADJACENT AREAS OR STRUCTURES.

AMERICAN PUBLIC WORKS ASSOCIATION	
APWA	KANSAS CITY METROPOLITAN CHAPTER
CULVERT INLET SEDIMENT TRAP	STANDARD DRAWING NUMBER ESC-27 ADOPTED:

J:\KCMOAPWA\27787\CIVIL\details\draft 4-22-03\division III\ESC-27.DWG 04-23-2003 10:26 JRA

SEDIMENT FENCE CULVERT INLET PROTECTION

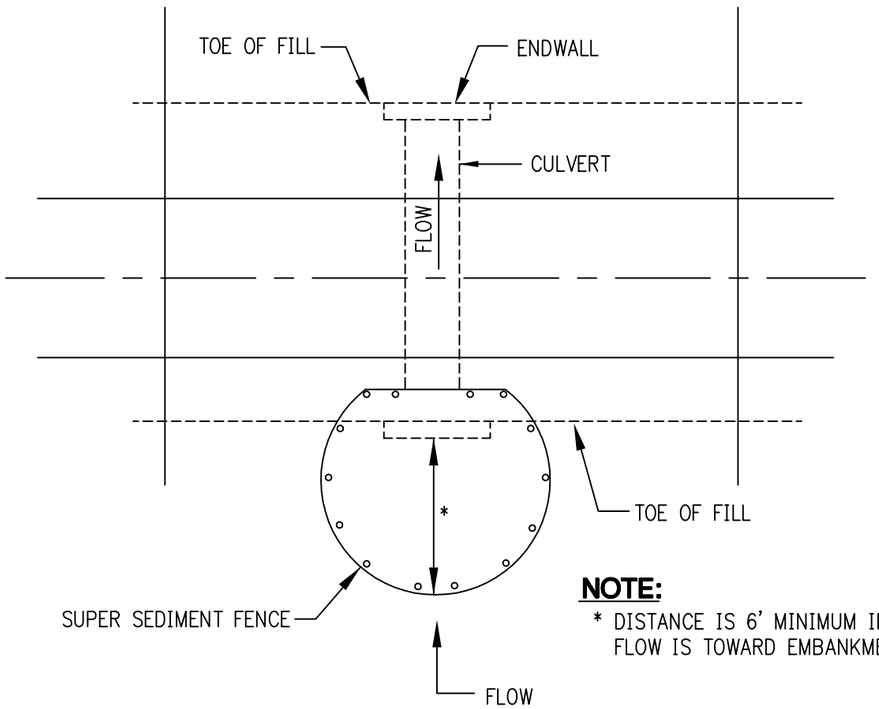

NOTE:

* DISTANCE IS 6' MINIMUM IF FLOW IS TOWARD EMBANKMENT.

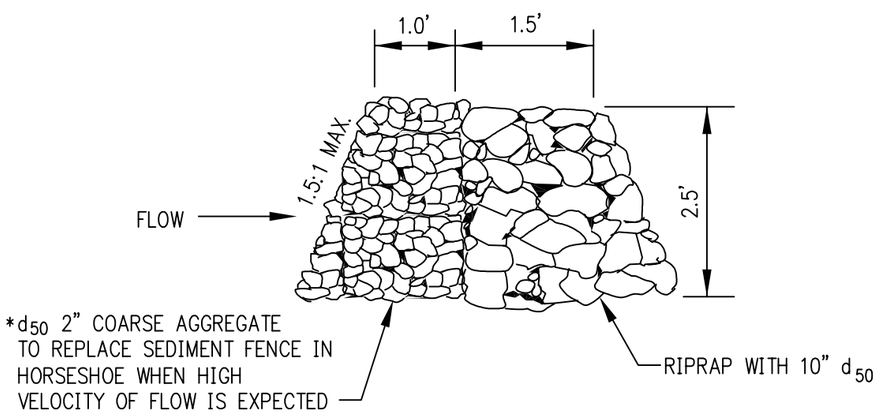

***OPTIONAL STONE COMBINATION**

NOT TO SCALE

SEDIMENT FENCE CULVERT INLET PROTECTION NOTES:

A) GENERAL NOTES:

1. THE INLET PROTECTION DEVICE SHALL BE CONSTRUCTED IN A MANNER THAT WILL FACILITATE CLEAN-OUT AND DISPOSAL OF TRAPPED SEDIMENT AND MINIMIZE INTERFERENCE WITH CONSTRUCTION ACTIVITIES.
2. THE INLET PROTECTION DEVICES SHALL BE CONSTRUCTED IN SUCH A MANNER THAT ANY RESULTANT PONDING STORMWATER WILL NOT CAUSE EXCESSIVE INCONVIENCE OR DAMAGE TO ADJACENT AREAS OR STRUCTURES.
3. DESIGN CRITERIA MORE SPECIFIC TO EACH PARTICULAR INLET PROTECTION DEVICE ARE FOUND IN SECTION 5108.8.

B) SUPER SEDIMENT FENCE INSTALLATION NOTES:

1. THE HEIGHT OF A SEDIMENT FENCE SHALL BE A MINIMUM OF 16 INCHES ABOVE THE ORIGINAL GROUND SURFACE AND SHALL NOT EXCEED 34 INCHES ABOVE GROUND SURFACE.
2. THE GEOTEXTILE SHALL BE PURCHASED IN A CONTINUOUS ROLL CUT TO THE LENGTH OF THE BARRIER TO AVOID THE USE OF JOINTS. WHEN JOINTS ARE UNAVOIDABLE, GEOTEXTILE SHALL BE SPLICED TOGETHER AT A SUPPORT POST, WITH A MINIMUM 6-INCH OVERLAP, AND SECURELY SEALED.
3. DIG A TRENCH AT LEAST 6 INCHES DEEP AND 4 INCHES WIDE ALONG THE FENCE ALIGNMENT.
4. DRIVE POSTS AT LEAST 24 INCHES INTO THE GROUND ON THE DOWNSLOPE SIDE OF THE TRENCH. SPACE POSTS A MAXIMUM OF 6 FEET APART.
5. EXTRA-STRENGTH SEDIMENT FENCE FABRIC SHALL BE USED. POSTS FOR THIS TYPE OF FABRIC SHALL BE PLACED A MAXIMUM OF 6 FEET APART. THE SEDIMENT FABRIC SHALL BE FASTENED SECURELY TO THE UPSLOPE SIDE OF THE POSTS USING MINIMUM ONE-INCH LONG HEAVY-DUTY WIRE STAPLES OR TIE WIRES, AND EIGHT INCHES OF THE FABRIC SHALL BE EXTENDED INTO THE TRENCH. THE FABRIC SHALL NOT BE STAPLED TO EXISTING TREES.
6. PLACE THE BOTTOM 1 FOOT OF FABRIC IN THE 6-INCH DEEP TRENCH, LAPPING TOWARD THE UPSLOPE SIDE. BACKFILL WITH COMPACTED EARTH OR GRAVEL.
7. IF A SEDIMENT FENCE IS TO BE CONSTRUCTED ACROSS A DITCH LINE OR SWALE, IT MUST BE OF SUFFICIENT LENGTH TO ELIMINATE ENDFLOW, AND THE PLAN CONFIGURATION SHALL RESEMBLE AN ARC OR HORSESHOE WITH THE ENDS ORIENTED UPSLOPE. EXTRA-STRENGTH SEDIMENT FABRIC SHALL BE USED FOR THIS APPLICATION WITH A MAXIMUM 3-FOOT SPACING OF POSTS. ALL OTHER INSTALLATION REQUIREMENTS NOTED IN #5 APPLY.
8. TO REDUCE MAINTENANCE, EXCAVATE A SHALLOW SEDIMENT STORAGE AREA ON THE UPSLOPE SIDE OF THE FENCE. PROVIDE GOOD ACCESS IN AREAS OF HEAVY SEDIMENTATION FOR CLEAN OUT AND MAINTENANCE.
9. SEDIMENT FENCES SHALL BE REMOVED WHEN THEY HAVE SERVED THEIR USEFUL PURPOSE BUT NOT BEFORE THE UPSLOPE AREA HAS BEEN PERMANENTLY STABILIZED.

SOURCE: MODIFIED FROM VA. DCR, 1992

AMERICAN PUBLIC WORKS ASSOCIATION	
APWA	KANSAS CITY METROPOLITAN CHAPTER
SEDIMENT FENCE CULVERT INLET PROTECTION	STANDARD DRAWING NUMBER ESC-28 ADOPTED:

J:\KCMOAPWA\27787\CIVIL\details\draft 4-22-03\division III\ESC-28.DWG 04-23-2003 10:32 JRA

DIVERSIONS

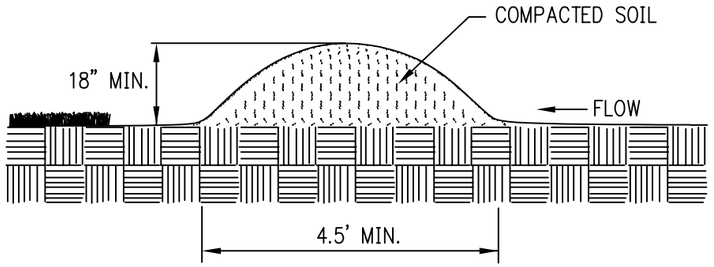

TEMPORARY DIVERSION DIKE
NOT TO SCALE

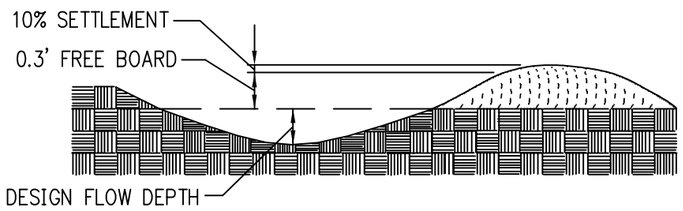

TYPICAL PARABOLIC DIVERSION

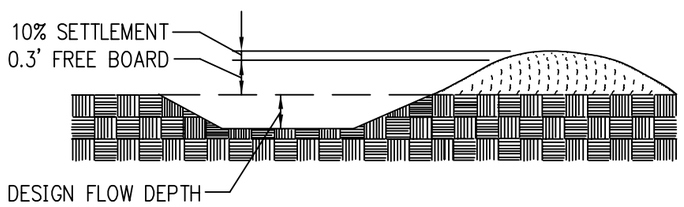

TYPICAL TRAPEZOIDAL DIVERSION

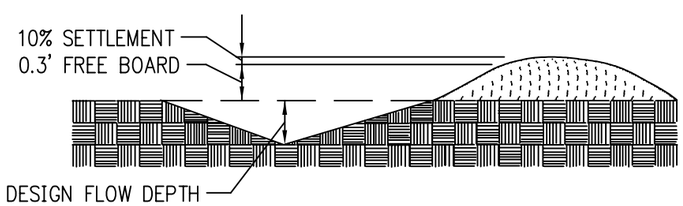

TYPICAL VEE-SHAPED DIVERSION

TEMPORARY RIGHT-OF-WAY DIVERSIONS

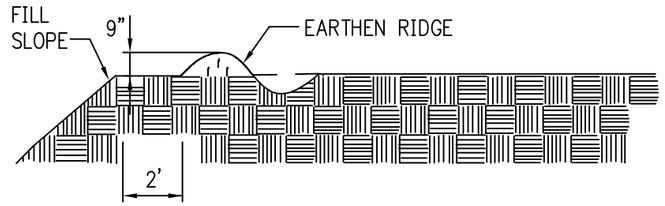

TEMPORARY FILL DIVERSION
NOT TO SCALE

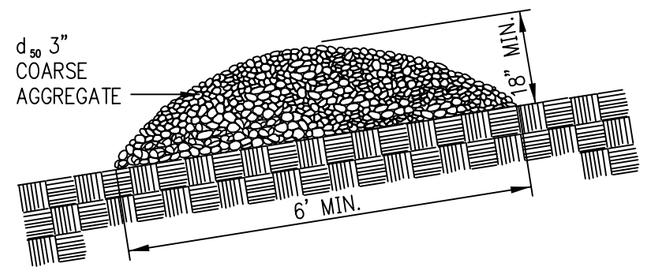

TYPICAL GRAVEL STRUCTURE

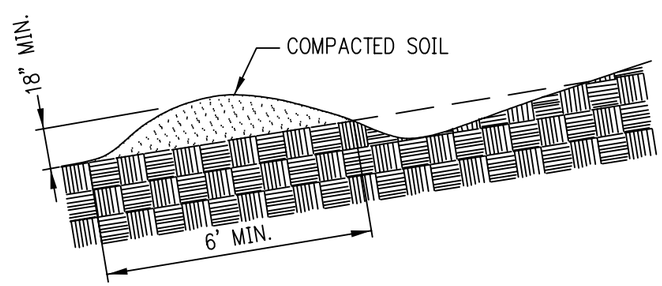

TYPICAL EARTHEN STRUCTURE

TEMPORARY DIVERSION DIKE NOTES:

1. TEMPORARY DIVERSION DIKES MUST BE INSTALLED AS A FIRST STEP IN THE LAND-DISTURBING ACTIVITY AND MUST BE FUNCTIONAL PRIOR TO UPSLOPE LAND DISTURBANCE.
2. THE DIKE SHOULD BE ADEQUATELY COMPACTED TO PREVENT FAILURE.
3. TEMPORARY OR PERMANENT SEEDING AND MULCH SHALL BE APPLIED TO THE DIKE IMMEDIATELY FOLLOWING ITS CONSTRUCTION.
4. THE DIKE SHOULD BE LOCATED TO MINIMIZE DAMAGES BY CONSTRUCTION OPERATIONS AND TRAFFIC.

TEMPORARY FILL DIVERSION NOTES:

1. THE DIVERSION SHALL BE CONSTRUCTED AT THE TOP OF THE FILL AT THE END OF EACH WORK DAY AS NEEDED.
2. THE DIVERSION SHALL BE LOCATED AT LEAST 2 FEET INSIDE THE TOP EDGE OF THE FILL.
3. THE SUPPORTING RIDGE SHALL BE CONSTRUCTED WITH A UNIFORM HEIGHT ALONG ITS ENTIRE LENGTH. WITHOUT UNIFORM HEIGHT, THE FILL DIVERSION MAY BE SUSCEPTIBLE TO BREACHING.

RIGHT-OF-WAY DIVERSION DETAIL NOTES:

1. THE DIVERSION SHALL BE INSTALLED AS SOON AS THE RIGHT-OF-WAY HAS BEEN CLEARED AND/OR GRADED.
2. ALL EARTHEN DIVERSIONS SHALL BE MACHINE- OR HAND-COMPACTED IN 8-INCH LIFTS.
3. THE OUTLET OF THE DIVERSION SHALL BE LOCATED IN AN UNDISTURBED AND STABILIZED AREA WHEN AT ALL POSSIBLE. THE FIELD LOCATION SHOULD BE ADJUSTED AS NEEDED TO UTILIZE A STABILIZED OUTLET.
4. EARTHENED DIVERSIONS WHICH WILL NOT BE SUBJECT TO CONSTRUCTION TRAFFIC SHOULD BE STABLIIZED IN ACCORDANCE WITH TEMPORARY SEEDING.

DIVERSION DETAIL NOTES:

1. ALL TREES, BRUSH, STUMPS, OBSTRUCTIONS, AND OTHER OBJECTIONABLE MATERIAL SHALL BE REMOVED AND DISPOSED OF SO AS NOT TO INTERFERE WITH THE PROPER FUNCTIONING OF THE DIVERSION.
2. THE DIVERSION SHALL BE EXCAVATED OR SHAPED TO LINE, GRADE, AND CROSS-SECTION AS REQUIRED TO MEET THE CRITERIA SPECIFIED HEREIN, FREE OF IRREGULARITIES WHICH WILL IMPEDE FLOW.
3. FILLS SHALL BE COMPACTED AS NEEDED TO PREVENT UNEQUAL SETTLEMENT THAT WOULD CAUSE DAMAGE IN THE COMPLETED DIVERSION. FILL SHALL BE COMPOSED OF SOIL WHICH IS FREE FROM EXCESSIVE ORGANIC DEBRIS, ROCKS, OR OTHER OBJECTIONABLE MATERIALS.
4. ALL EARTH REMOVED AND NOT NEEDED IN CONSTRUCTION SHALL BE SPREAD OR DISPOSED OF SO THAT IT WILL NOT INTERFERE WITH THE FUNCTIONING OF THE DIVERSION.
5. PERMANENT STABILIZATION OF DISTURBED AREAS SHALL BE DONE IN ACCORDANCE WITH SECTION 2151.

SOURCE: MODIFIED FROM VA. DCR, 1992

AMERICAN PUBLIC WORKS ASSOCIATION	
APWA	KANSAS CITY METROPOLITAN CHAPTER
DIVERSIONS	STANDARD DRAWING NUMBER ESC-29 ADOPTED:

J:\KCMOAPWA\27787\CIVIL\details\draft 4-22-03\division III\ESC-29.DWG 04-23-2003 10:35 JRA

TRAPEZOIDAL GRASS-LINED CHANNEL

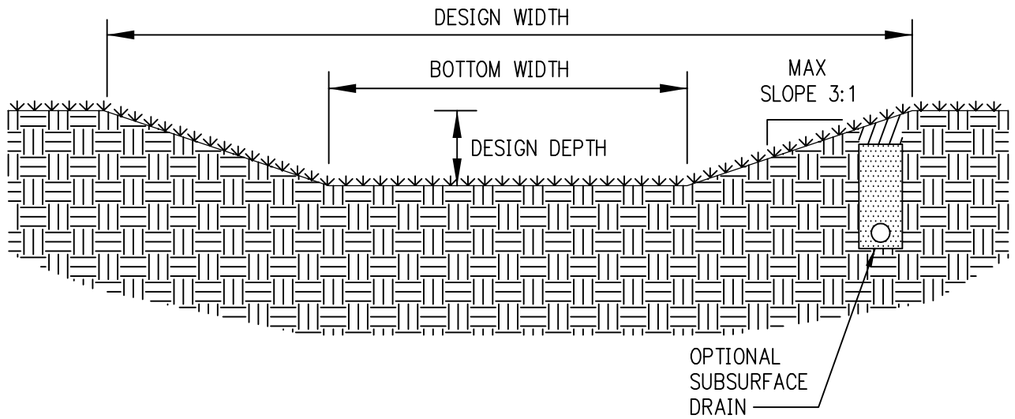

NOTES:

1. SIDE SLOPES SHOULD BE 3H:1V OR FLATTER.
2. USE MULCH, EROSION CONTROL BLANKETS, TURF REINFORCEMENT MAT, OR OTHER APPROPRIATE PRACTICES AS SPECIFIED IN THE DESIGN PLAN.
3. CHANNELS SHOULD EMPTY INTO SEDIMENT TRAPS, DETENTION/RETENTION BASINS, OR STABLE OUTLETS.
4. USE A SUBSURFACE DRAIN IN AREAS WITH SEASONABLY HIGH WATER TABLES OR SEEPAGE PROBLEMS.

TRAPEZOIDAL GRASS-LINED CHANNEL NOTES:

A) CONSTRUCTION SPECIFICATIONS:

1. REMOVE ALL TREES, BRUSH, STUMPS, AND OTHER OBJECTIONABLE MATERIAL FROM THE FOUNDATION AREA.
2. EXCAVATE THE CHANNEL AND SHAPE IT TO MEET LINES AND DIMENSIONS ON THE PLANS PLUS A 0.2-FT OVERCUT AROUND THE CHANNEL PERIMETER TO ALLOW FOR BULKING DURING SEEDBED PREPARATIONS AND SOD BUILDUP.
3. REMOVE AND PROPERLY DISPOSE OF ALL EXCESS SOIL SO THAT SURFACE WATER MAY ENTER THE CHANNEL FREELY.
4. THE PROCEDURE USED TO ESTABLISH GRASS IN THE CHANNEL WILL DEPEND UPON THE SEVERITY OF THE CONDITIONS AND SELECTION OF SPECIES. PROTECT THE CHANNEL WITH MULCH OR A ROLLED EROSION CONTROL PRODUCT SUFFICIENT TO WITHSTAND ANTICIPATED VELOCITY AND SHEAR STRESS DURING THE ESTABLISHMENT PERIOD.

B) INSPECTION AND MAINTENANCE:

1. CHECK THE DEVICE AFTER EVERY 1/2-INCH OR GREATER RAINFALL EVENT. IMMEDIATELY MAKE REPAIRS. CHECK THE CHANNEL OUTLET AND ALL ROAD CROSSINGS FOR BANK STABILITY AND EVIDENCE OF PIPING OR SCOUR HOLES. REMOVE ALL SIGNIFICANT SEDIMENT ACCUMULATIONS TO MAINTAIN THE DESIGN CARRYING CAPACITY. KEEP THE GRASS IN A HEALTHY, VIGOROUS CONDITION AT ALL TIMES SINCE IT IS THE PRIMARY EROSION PROTECTION FOR THE CHANNEL.

SOURCE: MODIFIED FROM MDNR, 1998

AMERICAN PUBLIC WORKS ASSOCIATION	
APWA	KANSAS CITY METROPOLITAN CHAPTER
TRAPEZOIDAL GRASS-LINED CHANNEL	STANDARD DRAWING NUMBER ESC-30
	ADOPTED:

J:\KCMOAPWA\27787\CIVIL\details\draft 4-22-03\division III\ESC-30.DWG 04-23-2003 15:35 JRA

INFILTRATION TRENCH

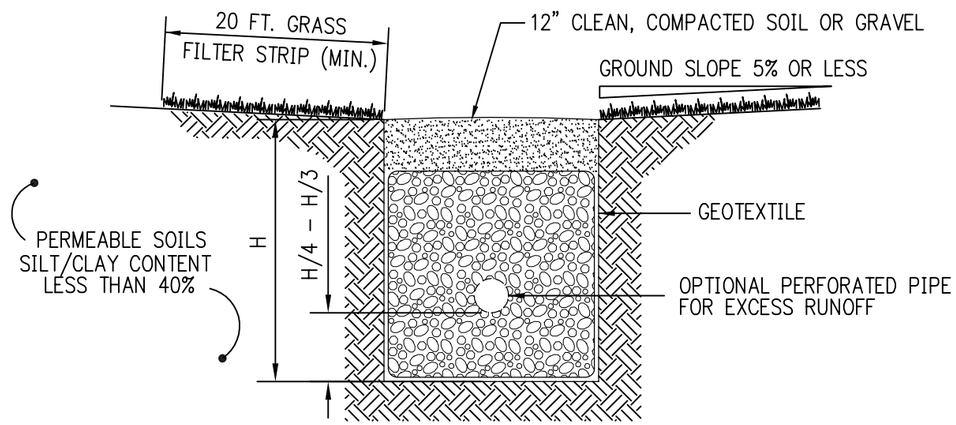

INFILTRATION TRENCH NOTES:

A) SITE PREPARATION

1. FOLLOW EROSION CONTROL PLANS TO ENSURE THAT SEDIMENT AND RUNOFF ARE KEPT FROM THE TRENCH AREA DURING CONSTRUCTION. ALL DEVELOPMENT SHOULD BE COMPLETE BEFORE THE TRENCH IS EXCAVATED.
2. LOCATE ALL UTILITIES AT THE SITE.
3. CLEAR, GRUB, AND STRIP THE DAM FOUNDATION REMOVING ALL WOODY VEGETATION, ROCKS, AND OTHER OBJECTIONABLE MATERIAL.
4. DISPOSE OF TREES, LIMBS, LOGS, AND OTHER DEBRIS IN DESIGNATED DISPOSAL AREAS.

B) SWALE TRENCH:

1. EXCAVATE THE TRENCH TO DIMENSIONS SPECIFIED IN THE DESIGN PLAN WITH A BACKHOE OR TRENCHER EQUIPPED WITH TRACKS TO AVOID COMPACTING THE TRENCH AREA. THE BOTTOM OF THE TRENCH SHOULD BE LEVEL.
2. SLOPE TRENCH SIDES OR PROVIDE SHORING ACCORDING TO SAFETY REGULATIONS.
3. LINE THE BOTTOM AND SIDES OF THE TRENCH WITH GEOTEXTILE FABRIC. THE FABRIC SHOULD BE PERMEABLE ENOUGH TO ALLOW THE TRENCH TO DRAIN WITHIN 72 HOURS.
4. BACKFILL THE TRENCH WITH UNIFORMLY GRADED SAND OR GRAVEL. DO NOT USE CRUSHED LIMESTONE, SHALE, OR ANY CRUSHED ROCK THAT WILL BECOME CEMENTED OVER TIME.
5. THE INSTALLATION OF A PERFORATED PIPE TO COLLECT AND TRANSPORT EXCESS RUNOFF IS OPTIONAL. THE TRENCH SHOULD BE DESIGNED SO THAT ALL RUNOFF INFILTRATES WITHIN 72 HOURS.
6. A PERFORATED PIPE MAY BE PLACED IN THE UPPER PART OF THE TRENCH TO QUICKLY DRAIN THE TOP OF THE TRENCH AFTER EACH RUNOFF EVENT; HOWEVER, THIS MAY ALLOW POLLUTANTS TO BE TRANSPORTED OFF SITE WITH THE SURFACE RUNOFF.
7. PLACE AT LEAST ONE OBSERVATION WELL IN EACH INFILTRATION TRENCH TO MONITOR THE PERFORMANCE OF THE TRENCH. PERFORATED POLYVINYL CHLORIDE (PVC) PIPE OR HIGH-DENSITY POLYETHYLENE (HDPE) PIPE IS RECOMMENDED. THE BOTTOM OF THE PIPE SHOULD EXTEND TO WITHIN 1 INCH OF THE GEOTEXTILE IN THE BOTTOM OF THE TRENCH.
8. OVERLAP THE GEOTEXTILE FABRIC ON THE TOP OF THE GRAVEL APPROXIMATELY 6 INCHES BELOW THE TOP OF THE TRENCH. FOLLOW MANUFACTURER'S RECOMMENDATIONS REGARDING THE AMOUNT OF OVERLAP, BUT IN NO CASE SHALL THE OVERLAP BE LESS THAN 12 INCHES. BACKFILL THE TOP OF THE TRENCH WITH GRAVEL.

C) UNDERGROUND TRENCH:

1. UNDERGROUND TRENCHES CAN BE APPLIED TO A VARIETY OF SITUATIONS AND ARE AESTHETICALLY PLEASING BUT MORE DIFFICULT TO MAINTAIN.
2. EXCAVATE THE TRENCH TO DIMENSIONS SPECIFIED IN THE DESIGN PLAN, LINE WITH GEOTEXTILE, AND BACKFILL THE BOTTOM OF THE TRENCH AS RECOMMENDED FOR SWALE TRENCHES. PLACE A PERFORATED PIPE ON TOP OF THE GRAVEL APPROXIMATELY 1/4 TO 1/3 OF THE DISTANCE TO THE TOP OF THE TRENCH. THE PIPE SHOULD BE PLACED WITH ZERO GRADE. THE SIZE OF THE PIPE WILL VARY; A LARGER PIPE CAN BE PLACED IN THE TRENCH, BUT THE WIDTH OF THE TRENCH WILL HAVE TO BE INCREASED. THE TRENCH WIDTH SHOULD BE A MINIMUM OF TWICE THE DIAMETER OF THE PIPE.
3. CONNECT THE PERFORATED PIPE TO THE COLLECTION PIPE. THE COLLECTION PIPE MAY BE CONNECTED TO AN INLET STRUCTURE USED TO TRAP SEDIMENT.
4. BACKFILL CLEAN GRAVEL OVER THE PIPE TO WITHIN 12 INCHES OF THE TOP OF THE TRENCH.
5. THE INSTALLATION OF A PERFORATED PIPE TO COLLECT AND TRANSPORT EXCESS RUNOFF IS OPTIONAL. THE TRENCH SHOULD BE DESIGNED TO DRAIN ALL RUNOFF WITHIN 72 HOURS. A PERFORATED PIPE MAY BE PLACED IN THE UPPER PART OF THE TRENCH TO QUICKLY DRAIN THE TOP OF THE TRENCH AFTER EACH RUNOFF EVENT.
6. OVERLAP THE GEOTEXTILE ACCORDING TO MANUFACTURER'S RECOMMENDATIONS, BUT IN NO CASE SHOULD THE AMOUNT OF OVERLAP BE LESS THAN 12 INCHES.
7. BACKFILL OVER THE GEOTEXTILE WITH AT LEAST 12 INCHES OF CLEAN, COMPACTED SOIL.

D) EROSION CONTROL:

1. DURING DEVELOPMENT, USE TEMPORARY DIVERSIONS TO PREVENT SURFACE WATER FROM RUNNING ONTO DISTURBED AREAS.
2. MINIMIZE THE SIZE OF DISTURBED AREAS AND VEGETATE ALL BUFFER STRIPS AS SOON AS THE TRENCH IS CONSTRUCTED.
3. DIVERT SEDIMENT-LADEN WATER TO SHALLOW VEGETATED BASINS OR A SEDIMENT COLLECTION SYSTEM CAPABLE OF REMOVING SEDIMENT TO PREVENT THE INFILTRATION TRENCH FROM BECOMING CLOGGED.
4. DIRECT ALL RUNOFF INTO SWALE TRENCHES AT LOW VELOCITY. ESTABLISH THE SLOPE OF THE TOP OF THE SWALE TO PREVENT PONDING OF WATER LONGER THAN 12 HOURS.

E) TROUBLESHOOTING:

BECAUSE SWALE INFILTRATION TRENCHES CAN IMPOUND WATER FOR SHORT PERIODS OF TIME, THEY CAN BE HAZARDOUS:

1. AVOID STEEP SLOPES; SLOPES AROUND THE SWALE INFILTRATION TRENCH SHOULD BE KEPT AT 20H:1V OR FLATTER.
2. FENCE AREA AND POST WARNING SIGNS IF TRESPASSING IS LIKELY.
3. DRAIN THE TRENCH BETWEEN STORM EVENTS.
4. SLOPE SIDES OF TRENCH OR PROVIDE SHORING.

CONSULT WITH A QUALIFIED DESIGN PROFESSIONAL IF ANY OF THE FOLLOWING OCCUR:

1. VARIATIONS IN TOPOGRAPHY ON SITE INDICATE INFILTRATION TRENCH WILL NOT FUNCTION AS INTENDED.
2. DESIGN SPECIFICATIONS FOR FILL, PIPE, GRAVEL, OR GEOTEXTILE CANNOT BE MET; SUBSTITUTIONS MAY BE REQUIRED. UNAPPROVED SUBSTITUTIONS COULD LEAD TO FAILURE.

CHECK THE FINISHED GRADES AND CONFIGURATION FOR ALL EARTHWORK. CHECK ELEVATIONS AND DIMENSIONS OF ALL PIPES AND STRUCTURES.

F) INSPECTION AND MAINTENANCE:

1. INSPECT THE INFILTRATION TRENCH AFTER EACH 1/2-INCH OR GREATER STORM EVENT. WATER LEVELS IN THE OBSERVATION WELLS SHOULD BE RECORDED OVER SEVERAL DAYS TO CHECK TRENCH DRAINAGE.
2. ANNUALLY INSPECT THE CONDITION OF THE GRASS BUFFER STRIPS IN SWALE TRENCHES. GROWTH SHOULD BE VIGOROUS AND DENSE. BARE SPOTS, ERODED AREAS, OR BURNED OUT AREAS SHOULD BE RESEEDED OR RESODDED.
3. MOW GRASS FILTER STRIPS AT LEAST TWICE A YEAR TO PREVENT WOODY GROWTH.
4. SEDIMENT REMOVAL INLETS SHOULD BE CLEANED OUT WHEN SEDIMENT FILLS 25% OF THE AVAILABLE CAPACITY.
5. PRUNE TREE LIMBS OVERHANGING THE SWALE TRENCH TO PREVENT LEAVES FROM FALLING ONTO THE TRENCH.

SOURCE: MODIFIED FROM MDNR, 1998

AMERICAN PUBLIC WORKS ASSOCIATION		
APWA	KANSAS CITY METROPOLITAN CHAPTER	
INFILTRATION TRENCH	STANDARD DRAWING NUMBER ESC-31	
	ADOPTED:	

J:\KCMOAPWA\27787\CIVIL\details\draft 4-22-03\division III\ESC-31.DWG 04-23-2003 10:47 JRA

TEMPORARY SLOPE DRAIN

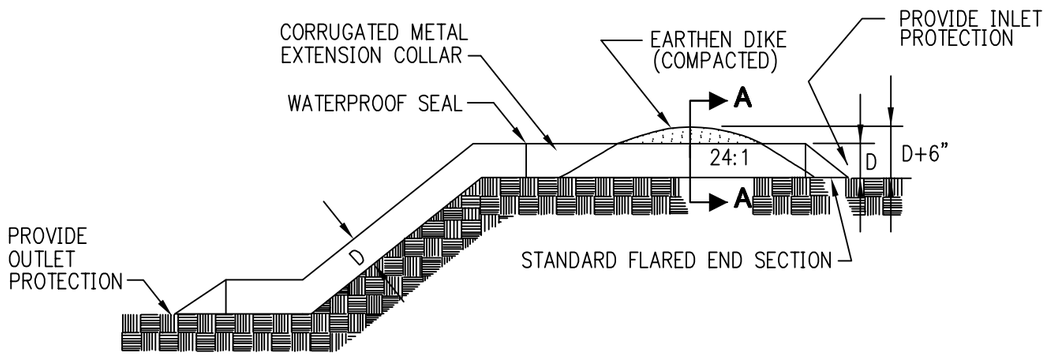

SECTION VIEW
NOT TO SCALE

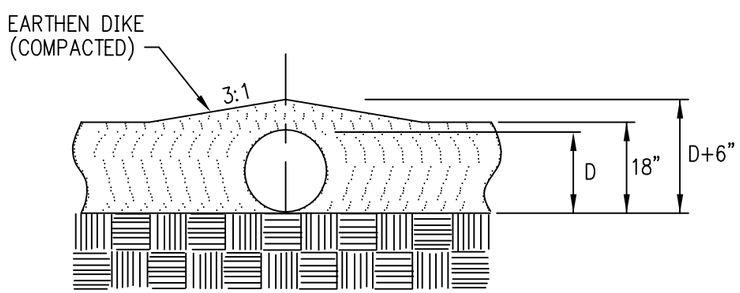

SECTION A-A
NOT TO SCALE

TEMPORARY SLOPE DRAIN NOTES:

A) GENERAL NOTES:

1. PLACE ON UNDISTURBED SOIL OR WELL-COMPACTED FILL.
2. THE ENTRANCE SECTION SHALL SLOPE TOWARD THE SLOPE DRAIN AT A MINIMUM OF 1/2 INCH PER FOOT.
3. THE SOIL AROUND AND UNDER THE ENTRANCE SECTION SHALL BE HAND-TAMPED IN 8-INCH LIFTS TO THE TOP OF THE DIKE TO PREVENT PIPING FAILURE AROUND THE INLET.
4. SEDIMENT MAY BE CONTROLLED AT THE OUTLET IF UPLAND PONDING WILL CREATE PROBLEMS

B) INSPECTION AND MAINTENANCE:

1. THE SLOPE DRAIN STRUCTURE SHALL BE INSPECTED WEEKLY AND AFTER EVERY STORM EVENT OF 1/2-INCH OR GREATER, AND REPAIRS SHALL BE MADE IF NECESSARY. THE CONTRACTOR SHALL AVOID THE PLACEMENT OF ANY MATERIAL ON AND PREVENT CONSTRUCTION TRAFFIC ACROSS THE SLOPE DRAIN.

SOURCE: MODIFIED FROM VA. DCR, 1992

AMERICAN PUBLIC WORKS ASSOCIATION	
APWA	KANSAS CITY METROPOLITAN CHAPTER
TEMPORARY SLOPE DRAIN	STANDARD DRAWING NUMBER ESC-32 ADOPTED:

J:\KCMOAPWA\27787\CIVIL\details\draft 4-22-03\division III\ESC-32.DWG 04-23-2003 10:51 JRA

TEMPORARY SEDIMENT TRAP

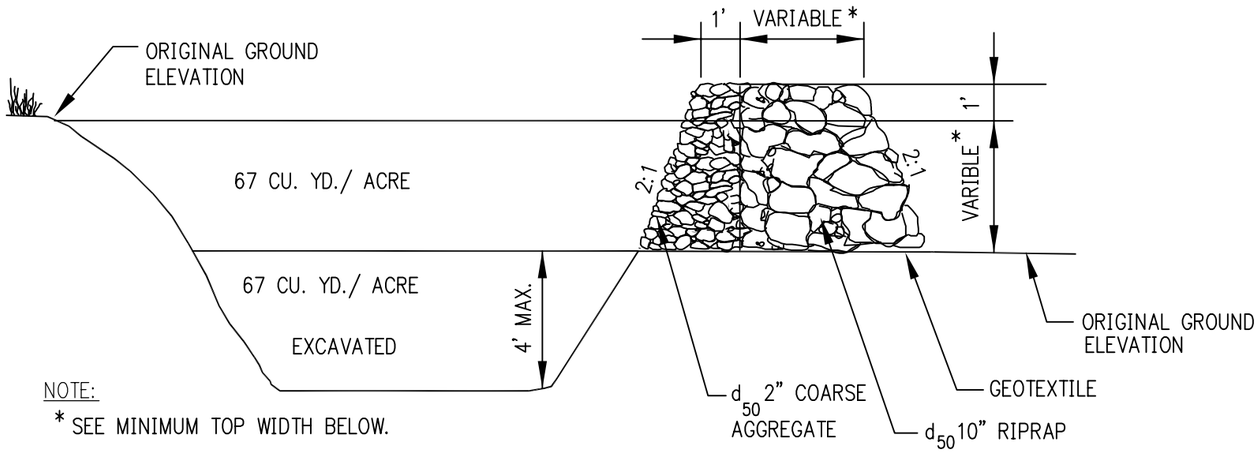

NOTE:
* SEE MINIMUM TOP WIDTH BELOW.

CROSS SECTION OF OUTLET

NOT TO SCALE

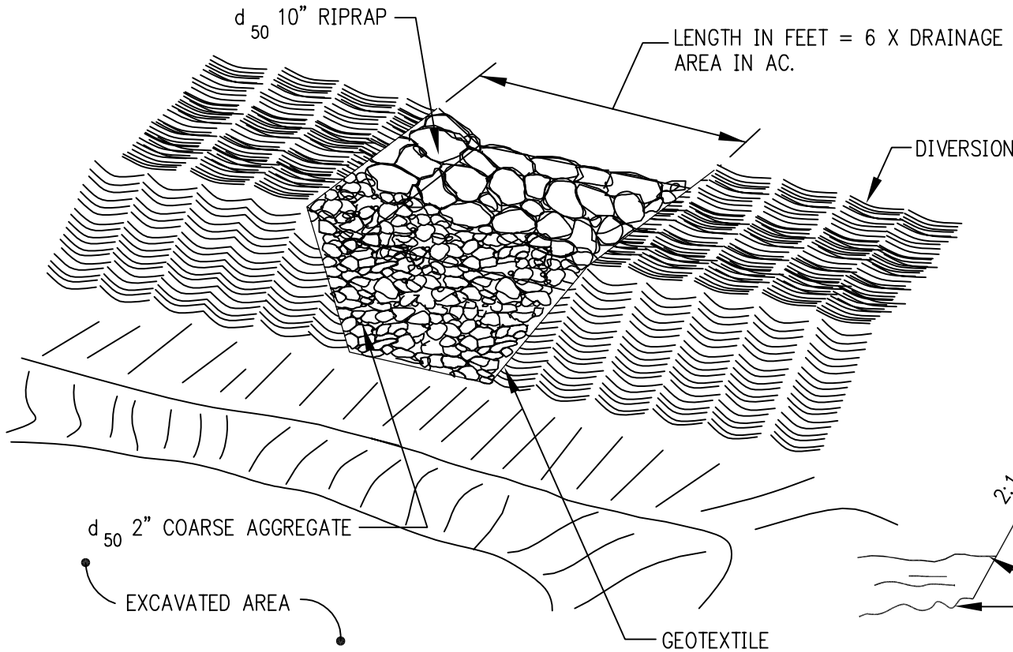

OUTLET (PERSPECTIVE VIEW)

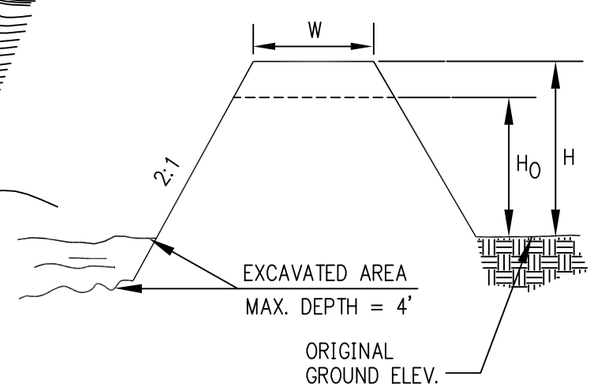

MINIMUM TOP WIDTH

NOT TO SCALE

H	H_O	W
1.5	0.5	2.0
2.0	1.0	2.0
2.5	1.5	2.5
3.0	2.0	2.5
3.5	2.5	3.0
4.0	3.0	3.0
4.5	3.5	4.0
5.0	4.0	4.5

TEMPORARY SEDIMENT TRAP NOTES:

A) CONSTRUCTION SPECIFICATIONS:

1. THE AREA UNDER THE EMBANKMENT SHALL BE CLEARED, GRUBBED, AND STRIPPED OF ANY VEGETATION AND ROOT MAT.
2. FILL MATERIAL FOR THE EMBANKMENT SHALL BE FREE OF ROOTS OR OTHER WOODY VEGETATION, ORGANIC MATERIAL, LARGE STONES, AND OTHER OBJECTIONABLE MATERIAL. THE EMBANKMENT SHOULD BE COMPACTED IN 6-INCH LAYERS BY TRAVERSING WITH CONSTRUCTION EQUIPMENT.
3. THE EARTHEN EMBANKMENT SHALL BE SEEDED WITH TEMPORARY OR PERMANENT VEGETATION IMMEDIATELY AFTER INSTALLATION.
4. CONSTRUCTION OPERATIONS SHALL BE CARRIED OUT TO MINIMIZE EROSION AND WATER POLLUTION.
5. THE STRUCTURE SHALL BE REMOVED AND THE AREA STABILIZED WHEN THE UPSLOPE DRAINAGE AREA HAS BEEN STABILIZED.
6. ALL CUT AND FILL SLOPES SHALL BE 2H:1V OR FLATTER EXCEPT FOR EXCAVATED, WET STORAGE AREAS WHICH MAY BE AT A MAXIMUM 1H:1V GRADE.

B) INSPECTION AND MAINTENANCE:

1. INSPECT THE TEMPORARY SEDIMENT TRAP AFTER EACH STORM EVENT OF 1/2-INCH OR GREATER.
2. REMOVE AND PROPERLY DISPOSE OF SEDIMENT WHEN IT ACCUMULATES TO ONE-HALF THE DESIN VOLUME AS INDICATED BY THE CLEAN-OUT STAKE.
3. PERIODICALLY CHECK THE EMBANKMENT, SPILLWAY, AND OUTLET APRON FOR EROSION DAMAGE, SETTLING SEEPAGE, OR SLUMPING ALONG THE TOE AND REPAIR IMMEDIATELY.
4. REPLACE THE SPILLWAY GRAVEL FACING IF IT BECOMES CLOGGED.
5. INSPECT VEGETATION AND RESEED IF NECESSARY.
6. REPLACE ANY DISPLACED RIPRAP SO THAT NO REPLACEMENT ROCK IS ABOVE THE DESIGN GRADE.
7. REMOVE THE TEMPORARY SEDIMENT TRAP AFTER THE DRAINAGE AREA HAS BEEN PERMANENTLY STABILIZED, INSPECTED, AND APPROVED. DO SO BY DRAINING ANY WATER, REMOVING THE SEDIMENT TO A DESIGNATED DISPOSAL AREA, AND GRADING THE SITE TO BLEND WITH THE SURROUNDING AREA; THEN STABILIZE.

SOURCE: MODIFIED FROM VA. DCR, 1992

AMERICAN PUBLIC WORKS ASSOCIATION	
APWA	KANSAS CITY METROPOLITAN CHAPTER
TEMPORARY SEDIMENT TRAP	STANDARD DRAWING NUMBER ESC-33 ADOPTED:

J:\KCMOAPWA\27787\CIVIL\details\draft 4-22-03\division III\ESC-33.DWG 04-23-2003 10:56 JRA

ANTI-SEEP COLLAR

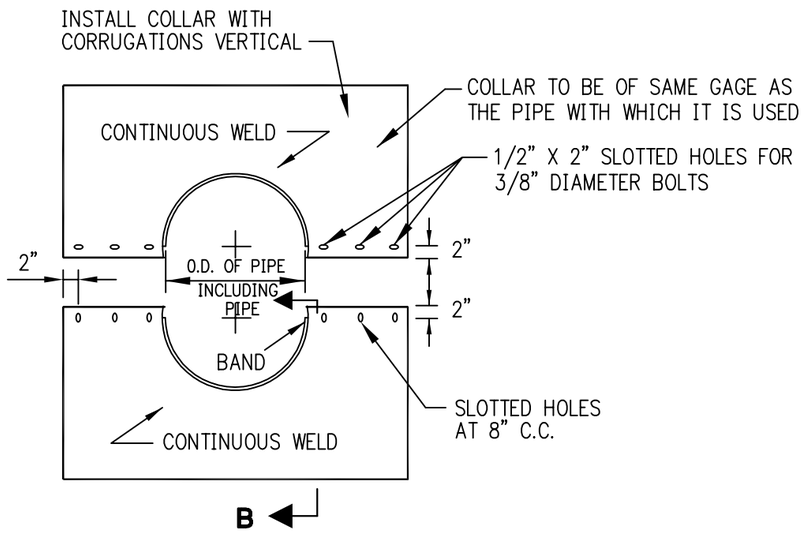

DETAILS OF CORRUGATED METAL ANTI-SEEP COLLAR

NOT TO SCALE

NOTES FOR COLLARS:

1. ALL MATERIALS TO BE IN ACCORDANCE WITH CONSTRUCTION MATERIAL SPECIFICATIONS.
2. WHEN SPECIFIED ON THE PLANS, COATING OF COLLARS SHALL BE IN ACCORDANCE WITH CONSTRUCTION AND CONSTRUCTION MATERIAL SPECIFICATIONS.
3. UNASSEMBLED COLLARS SHALL BE MARKED BY PAINTING OR TAGGING TO IDENTIFY MATCHING PAIRS.
4. THE LAP BETWEEN THE TWO HALF SECTIONS AND BETWEEN THE PIPE AND CONNECTING BAND SHALL BE CAULKED WITH ASPHALT MASTIC AT TIME OF INSTALLATION.
5. EACH COLLAR SHALL BE FURNISHED WITH TWO 1/2" DIAMETER RODS WITH STANDARD TANK LUGS FOR CONNECTING COLLARS TO PIPE.

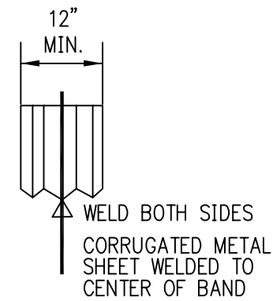

SECTION B-B

NOT TO SCALE

SIZE AND SPACING OF SLOTTED OPENINGS SHALL BE THE SAME AS SHOWN FOR CM COLLAR

USE RODS AND LUGS TO CLAMP BANDS SECURELY TO PIPE.

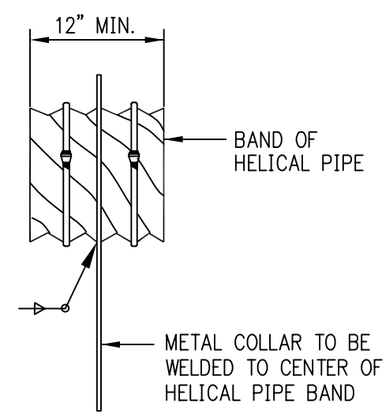

PARTIAL ELEVATION

NOT TO SCALE

DETAIL OF HELICAL PIPE ANTI-SEEP COLLAR

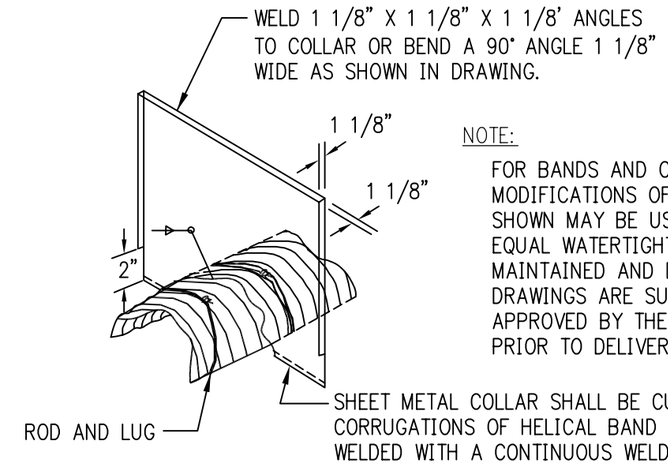

NOTE:

FOR BANDS AND COLLARS MODIFICATIONS OF THE DETAILS SHOWN MAY BE USED PROVIDING EQUAL WATERTIGHTNESS IS MAINTAINED AND DETAILED DRAWINGS ARE SUBMITTED AND APPROVED BY THE ENGINEER PRIOR TO DELIVERY.

ISOMETRIC VIEW

NOT TO SCALE

NOTES:

TWO OTHER TYPES OF ANTI-SEEP COLLARS ARE:

1. CORRUGATED METAL, SIMILAR TO ABOVE EXCEPT SHOP WELDED TO A 4FT. SECTION OF THE PIPE AND CONNECTED TO THE PIPE WITH CONNECTING BANDS.
2. CONCRETE, 6 INCHES THICK FORMED AROUND THE PIPE WITH #3 REBAR SPACED 15" HORIZONTALLY AND VERTICALLY.

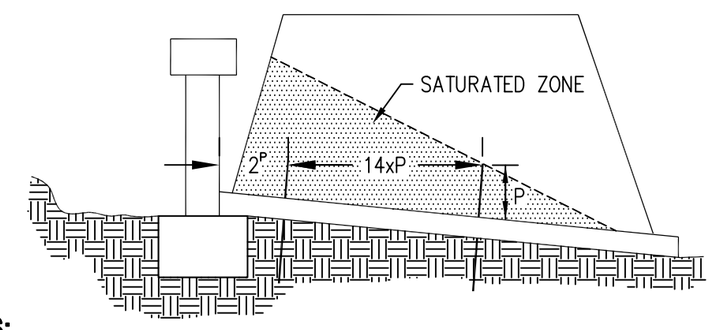

NOTES:

CONNECTIONS BETWEEN THE ANTI-SEEP AND THE BARREL MUST BE WATERTIGHT.

ANTI-SEEP COLLAR

NOT TO SCALE

SOURCE: MODIFIED FROM VA. DCR, 1992

AMERICAN PUBLIC WORKS ASSOCIATION	
APWA	KANSAS CITY METROPOLITAN CHAPTER
ANTI-SEEP COLLAR	STANDARD DRAWING NUMBER ESC-34 ADOPTED:

J:\KCMOAPWA\27787\CIVIL\details\draft 4-22-03\division III\ESC-34.DWG 04-23-2003 11:00 JRA

DETENTION/INFILTRATION BASIN

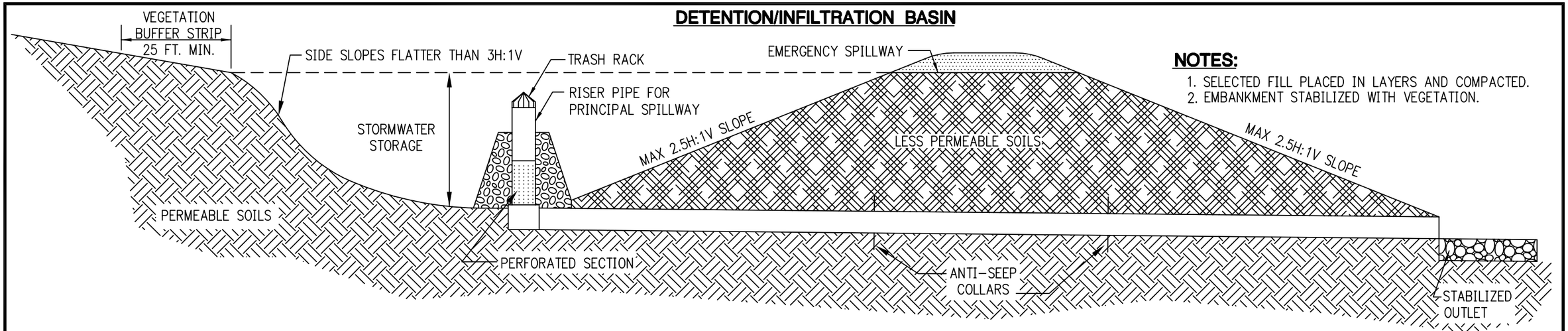

NOTES:

1. SELECTED FILL PLACED IN LAYERS AND COMPACTED.
2. EMBANKMENT STABILIZED WITH VEGETATION.

CONSTRUCTION SPECIFICATIONS:

A) SITE PREPARATION:

1. LOCATE ALL UNDERGROUND UTILITIES.
2. FOLLOW ALL FEDERAL, STATE, AND LOCAL REQUIREMENTS.
3. CLEAR, GRUB, AND STRIP THE DAM FOUNDATION REMOVING ALL WOODY VEGETATION, ROCKS, AND OTHER OBJECTIONABLE MATERIAL.
4. DISPOSE OF TREES, LIMBS, LOGS, AND OTHER DEBRIS IN DESIGNATED DISPOSAL AREAS.
5. EXCAVATE THE PRINCIPAL SPILLWAY AREA, OUTLET APRON FIRST, STOCKPILING ANY SURFACE SOIL HAVING HIGH AMOUNTS OF ORGANIC MATTER FOR LATER USE.
6. CLEAR THE BASIN AND GRADE TO ALLOW SURFACE DRAINAGE AND TO ENCOURAGE ESTABLISHMENT OF A GOOD COVER OF VEGETATION. USE TRACKED EQUIPMENT TO AVOID COMPACTION.

B. PRINCIPAL SPILLWAY:

1. SITUATE THE SPILLWAY PIPE AND RISER ON A FIRM, EVEN FOUNDATION. PREPARE THE BEDDING FOR THE PIPE.
2. PLACE AROUND THE BARREL A 4-INCH LAYER OF MOIST, CLAYEY, WORKABLE SOIL, NOT PERVIOUS MATERIAL SUCH AS SAND, GRAVEL, OR SILT; COMPACT WITH HAND TAMPERS TO AT LEAST THE DENSITY OF THE FOUNDATION SOIL. DO NOT RAISE THE PIPE FROM THE FOUNDATION WHEN COMPACTING UNDER THE PIPE HAUNCHES.
3. EMBED THE RISER AT LEAST 12 INCHES INTO CONCRETE TO PROVIDE AN ANTI-FLOATATION BLOCK. THE WEIGHT OF THE CONCRETE SHOULD BALANCE THE BUOYANT FORCE ACTING ON THE RISER.

   BUOYANT FORCE = VOLUME OF RISER X 62.4 LBS/FT^3
4. PLACE A TRASH RACK AROUND THE RISER INLET. TRASH RACKS CAN BE CONSTRUCTED BY WELDING #4 REBAR IN A GRID WITH 4- TO 6-INCH OPENINGS
5. CONSTRUCT ANTI-SEEP DEVICES.
6. AT THE PIPE OUTLET, INSTALL A RIPRAP OR CONCRETE APRON AT LEAST 5 FEET WIDE AND 10 FEET LONG TO A STABLE GRADE.
7. OPTIONAL: A SLOTTED OR V-NOTCH WEIR, CONSTRUCTED WITHIN AN OPEN CHANNEL SPILLWAY, CAN BE USED IN PLACE OF A RISER AND CONDUIT AS A PRINCIPAL SPILLWAY.

C) EMBANKMENT:

1. SCARIFY THE EMBANKMENT FOUNDATION BEFORE PLACING FILL.
2. USE FILL FROM PREDETERMINED BORROW AREAS. IT SHOULD BE CLEAN, STABLE SOIL FREE OF ORGANIC MATERIAL, ROOTS, WOODY VEGETATION, ROCKS, AND OTHER DEBRIS. IT MUST BE WET ENOUGH TO FORM A BALL WITHOUT CRUMBLING, YET NOT SO WET THAT WATER CAN BE SQUEEZED OUT.
3. PLACE THE MOST PERMEABLE SOIL IN THE DOWNSTREAM TOE AND THE LEAST PERMEABLE IN THE CENTER PORTION OF THE DAM.
4. COMPACT THE FILL MATERIAL IN 6- TO 8-INCH, CONTINUOUS LAYERS OVER THE LENGTH OF THE DAM. CONSTRUCTION EQUIPMENT MAY BE ROUTED OVER THE DAM SO THAT EACH LAYER IS TRAVERSED BY AT LEAST ONE WHEEL OF THE EQUIPMENT). TRACKED CONSTRUCTION EQUIPMENT DOES NOT PROVIDE ADEQUATE COMPACTION.
5. PROTECT THE SPILLWAY BARREL WITH 2 FEET OF COMPACTED, HAND-TAMPED FILL BEFORE TRAVERSING OVER THE PIPE WITH EQUIPMENT.
6. CONSTRUCT AND COMPACT THE DAM TO 10% ABOVE THE DESIGN HEIGHT TO ALLOW FOR SETTLING.

D) EMERGENCY SPILLWAY:

1. CONSTRUCT THE SPILLWAY IN UNDISTURBED SOIL AROUND ONE END OF THE EMBANKMENT AND LOCATE IT SO THAT ALL EXCESS FLOW WILL RETURN TO THE RECEIVING CHANNEL WITHOUT DAMAGING THE EMBANKMENT.
2. STABILIZE THE SPILLWAY WITH VEGETATION AS SOON AS GRADING IS COMPLETE; OR INSTALL PAVING MATERIAL TO FINISHED GRADE IF THE SPILLWAY IS NOT TO BE VEGETATED.

E) EROSION CONTROL:

1. MINIMIZE THE SIZE OF DISTURBED AREAS. AT THE COMPLETION OF EACH PHASE OF CONSTRUCTION, VEGETATE THE DISTURBED AREAS TO MINIMIZE EROSION.
2. USE TEMPORARY DIVERSIONS TO PREVENT SURFACE WATER FROM RUNNING ONTO DISTURBED AREAS.
3. DIRECT ALL RUNOFF INTO THE BASIN AT LOW VELOCITY. ESTABLISH THE PRINCIPAL SPILLWAY OUTLET ELEVATION TO PREVENT PONDING OF WATER LONGER THAN 72 HOURS.
4. STABILIZE ALL DISTURBED AREAS EXCEPT THE LOWER HALF OF THE SEDIMENT BASIN IMMEDIATELY AFTER CONSTRUCTION.

F) SAFETY:

BECAUSE DETENTION PONDS THAT IMPOUND WATER ARE HAZARDOUS, THE FOLLOWING PRECAUTIONS SHOULD BE TAKEN:

1. AVOID STEEP SLOPES; SLOPES AROUND THE EXTENDED DETENTION POND SHOULD BE 2.5H:1V OR FLATTER; 3H:1V WHERE MAINTAINED BY TRACTOR OR OTHER EQUIPMENT.
2. FENCE AREA AND POST WARNING SIGNS IF TRESPASSING IS LIKELY.
3. DEWATER THE BASIN BETWEEN STORM EVENTS.

CONSTRUCTION VERIFICATION: CHECK THE FINISHED GRADES AND CONFIGURATION FOR ALL EARTHWORK. CHECK ELEVATIONS AND DIMENSIONS OF ALL PIPES AND STRUCTURES.

G) INSPECTION AND MAINTENANCE:

1. INSPECT THE BASIN AFTER EACH STORM EVENT OF 1/2 INCH OR GREATER. IF THE BASIN STARTS TO POND WATER FOR EXTENDED PERIODS OF TIME, IT MAY BE CLOGGED AND NEED TO BE CLEANED OUT.
2. REMOVE AND PROPERLY DISPOSE OF ANY SEDIMENT THAT IS COLLECTED AT THE UPSTREAM END OF THE BASIN.
3. PERIODICALLY CHECK THE EMBANKMENT, EMERGENCY SPILLWAY, AND OUTLET FOR EROSION DAMAGE, PIPING, SETTLING, SEEPAGE, OR SLUMPING ALONG THE TOE OR AROUND THE BARRELL REPAIR IMMEDIATELY.
4. REMOVE TRASH AND OTHER DEBRIS FROM THE RISER, EMERGENCY SPILLWAY, AND POOL AREA.
5. CLEAN OR REPLACE THE GRAVEL AROUND THE RISER IF THE SEDIMENT POOL DOES NOT DRAIN PROPERLY.

SOURCE: MODIFIED FROM MDNR, 1998

AMERICAN PUBLIC WORKS ASSOCIATION	
APWA	KANSAS CITY METROPOLITAN CHAPTER
DETENTION/ INFILTRATION BASIN	STANDARD DRAWING NUMBER ESC-35 ADOPTED:

J:\KCMOAPWA\27787\CIVIL\details\draft 4-22-03\division III\ESC-35.DWG 04-23-2003 11:23 JRA

DIVERSION CHANNEL CROSSING

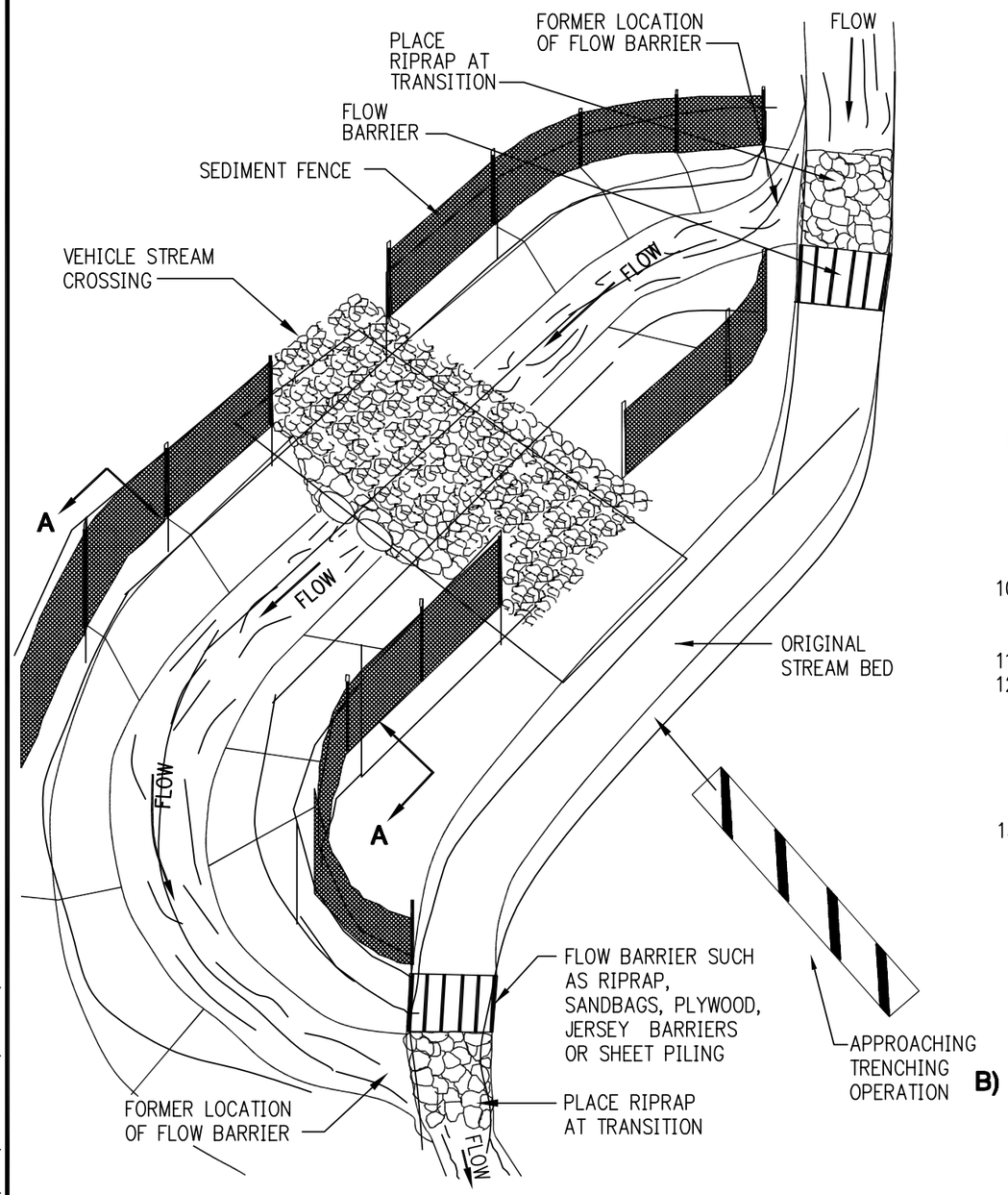

PERSPECTIVE VIEW

DIVERSION CHANNEL CROSSING NOTES:

A) GENERAL NOTES:

1. THE DIVERSION CHANNEL CROSSING MUST BE OPERATIONAL BEFORE WORK IS DONE IN THE STREAM. CONSTRUCTION WILL BE PERFORMED IN THE DRY.
2. MINIMUM WIDTH OF BOTTOM SHALL BE 6 FEET OR EQUAL TO BOTTOM WIDTH OF EXISTING STREAMBED, WHICHEVER IS LESS.
3. MAXIMUM STEEPNESS OF SIDE SLOPES SHALL BE 2H:1V. DEPTH AND GRADE MAY BE VARIABLE, DEPENDENT ON SITE CONDITIONS, BUT SHALL BE SUFFICIENT TO ENSURE CONTINUOUS FLOW OF WATER IN THE DIVERSION.
4. CHANNEL MUST BE LINED WITH RIPRAP OR TURF REINFORCEMENT MAT DEPENDING ON THE EXPECTED VELOCITY AND SHEAR STRESS IN THE CHANNEL.
5. STREAM DIVERSIONS MAY BE SEEDED WITH A STANDARD SEED MIX FOR THE TYPES OF SOIL ENCOUNTERED AND THE TIME OF YEAR SEED IS SOWN. AN AVERAGE GROWTH OF TWO INCHES IN HEIGHT SHALL BE ACHIEVED THROUGHOUT THE DIVERSION WITH AN 85% COVER BEFORE WATER IS ALLOWED THROUGH IT.
6. STREAM DIVERSION LINERS SHALL BE SECURED AT THE UPSTREAM AND DOWNSTREAM SIDES WITH NON-ERODIBLE WEIGHTS SUCH AS RIPRAP. THESE WEIGHTS SHALL ALLOW NORMAL FLOW OF THE STREAM. SOIL SHALL NOT BE MIXED WITH STREAM DIVERSION WEIGHTS. WEIGHTS MAY ALSO BE NEEDED ALONG THE DIVERSION'S LENGTH TO SECURE LINER.
7. STREAM DIVERSION LINERS SHOULD BE OVERLAPPED WHEN A SINGLE OR CONTINUOUS LINER IS NOT AVAILABLE OR IS IMPRACTICAL. OVERLAPS SHOULD BE SUCH THAT CONTINUOUS FLOW OF THE STREAM IS MAINTAINED. AN UPSTREAM SECTION SHOULD OVERLAP A DOWNSTREAM SECTION BY A MINIMUM OF 18 INCHES. OVERLAPS ALONG THE CROSS-SECTION SHOULD BE MADE SO THAT A LINER IS PLACED IN THE DIVERSION BOTTOM FIRST AND ADDITIONAL PIECES OF LINER ON THE SLOPES OVERLAP THE BOTTOM PIECE BY A MINIMUM OF 18-INCHES. SEE DETAIL FOR TRM INSTALLATION.
8. STREAM DIVERSION LINERS SHALL BE ENTRENCHED AT THE TOP OF THE SLOPES ALONG WITH A LINE OF SEDIMENT FENCE. SEDIMENT FENCE MAY BE EXCLUDED IF THE DIVERSION LINER IS EXTENDED TO SUCH A POINT THAT SEDIMENTATION OF THE STREAM WILL NOT OCCUR. IF SEDIMENT FENCE IS EXCLUDED, THE DIVERSION LINER MUST BE SECURED. LINERS SHALL EXTEND FROM SLOPE BREAK TO SLOPE BREAK.
9. STAPLES USED IN SECURING SOIL-STABILIZATION BLANKETS AND MATTING OR RIPRAP SHALL BE USED AS NECESSARY TO ANCHOR STREAM DIVERSION LINERS TO THE SIDE SLOPES OF THE DIVERSION. SEE DETAIL ON DRAWING ESC-09 FOR STAPLE PATTERNS.
10. NON-ERODIBLE MATERIALS SUCH AS RIPRAP, JERSEY BARRIERS, SANDBAGS, PLYWOOD, OR SHEET PILING SHALL BE USED AS FLOW BARRIERS TO DIVERT THE STREAM AWAY FROM ITS ORIGINAL CHANNEL AND TO PREVENT OR REDUCE WATER BACKUP INTO THE CONSTRUCTION AREA.
11. THE DOWNSTREAM FLOW BARRIER IS TO BE REMOVED PRIOR TO THE UPSTREAM BARRIER WHEN OPENING A STREAM DIVERSION.
12. STREAMS SHOULD BE REDIVERTED UPON COMPLETION OF THE UTILITY CROSSING FOR WHICH THE DIVERSION WAS BUILT. PRIOR TO REDIVERSION, ANY MATERIALS USED TO PREVENT WATER BACKUP INTO THE DOWNSTREAM END OF THE ORIGINAL STREAMBED SHALL BE REMOVED. THIS MATERIAL SHOULD NOT BE PLACED IN THE DOWNSTREAM END OF THE DIVERSION UNTIL AFTER WATER HAS BEEN REDIVERTED TO THE ORIGINAL WATERWAY. THE STREAM SHOULD THEN BE REDIVERTED BY REMOVING ALL THE MATERIALS DAMMING THE UPSTREAM END OF THE ORIGINAL STREAMBED. THE DIVERSION SHOULD BE SEALED OFF AT THE DOWNSTREAM END AND THEN BACKFILLED. ONCE STARTED, ANY WORK TO RELOCATE THE STREAM SHALL NOT BE DISCONTINUED UNTIL IT IS COMPLETED.
13. STREAM SHOULD BE REDIVERTED ONLY AFTER BACKFILLING AND RESTABILIZATION OF ORIGINAL STREAMBED AND BANKS IS COMPLETED. RESTABILIZATION SHALL CONSIST OF THE INSTALLATION OF UNGROUTED RIPRAP ON ALL DISTURBED STREAMBANK AREAS OR ON THE AREA 6 FEET TO EITHER SIDE OF THE CENTERLINE OF ITS UTILITY TRENCH, WHICHEVER IS GREATER. SLOPES SHALL BE OF 3H:1V OR STEEPER. REFER TO SECTION 2605, RIPRAP FOR INSTALLATION REQUIREMENTS. FOR SLOPES OF 3H:1V OR FLATTER, VEGETATIVE STABILIZATION MAY BE USED, PENDING APPROVAL BY THE PLAN-APPROVING AUTHORITY OR INSPECTION AUTHORITY. STABILIZATION OF STREAMBED AND BANKS AND THE APPROACH AREAS SHOULD OCCUR IMMEDIATELY FOLLOWING THE ATTAINMENT OF FINAL GRADE.

B) INSPECTION AND MAINTENANCE:

CARE MUST BE TAKEN TO INSPECT ANY STREAM CROSSING AREA AT THE END OF EACH DAY TO ENSURE THE CONSTRUCTION MATERIALS ARE POSITIONED SECURELY. THIS WILL ENSURE THAT THE WORK AREA STAYS DRY AND THAT NO CONSTRUCTION MATERIALS FLOAT DOWNSTREAM.

SOURCE: MODIFIED FROM VA. DCR, 1992

AMERICAN PUBLIC WORKS ASSOCIATION	
APWA	KANSAS CITY METROPOLITAN CHAPTER
DIVERSION CHANNEL CROSSING	STANDARD DRAWING NUMBER ESC-36 ADOPTED:

J:\KCMOAPWA\27787\CIVIL\details\draft 4-22-03\division III\ESC-36.DWG 04-23-2003 13:09 JRA

FLUME PIPE CROSSING

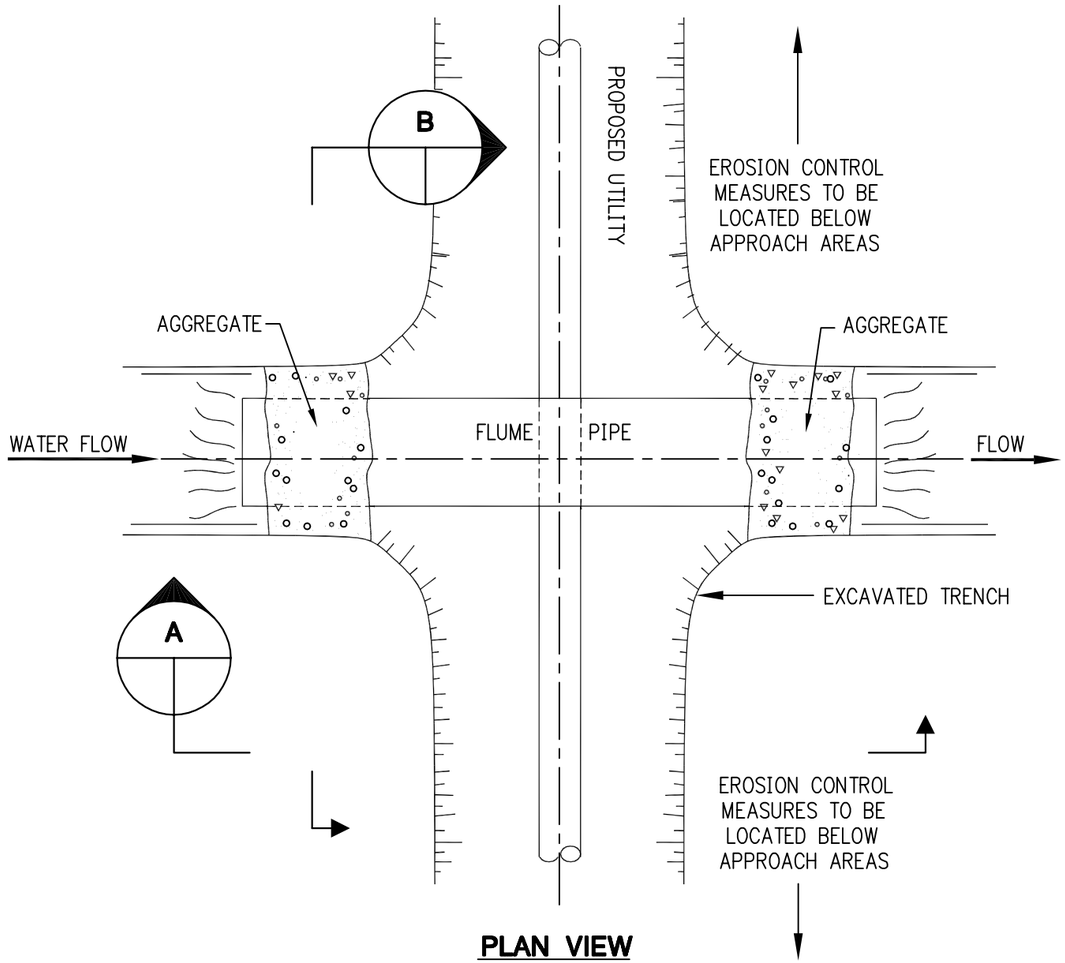

PLAN VIEW

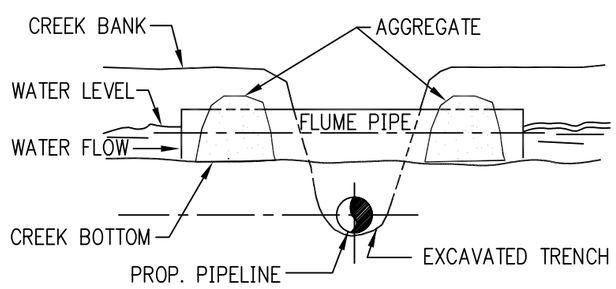

SECTION A-A

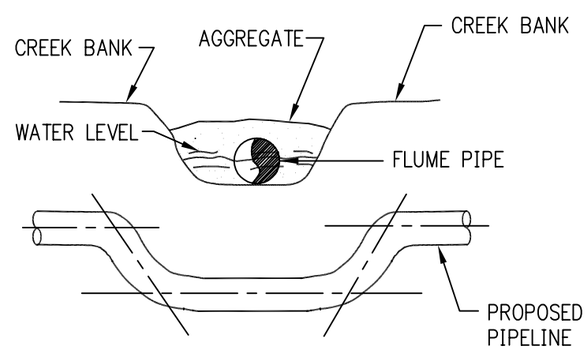

SECTION B-B

SOURCE: MODIFIED FROM VA. DCR, 1992

FLUME PIPE CROSSING NOTES:

A) GENERAL NOTES:

1. THE FLUME PIPE CROSSING MUST BE MADE OPERATIONAL PRIOR TO THE START OF CONSTRUCTION IN THE STREAM.
2. CULVERTS, STONE, AND GEOTEXTILE MUST MEET THE PHYSICAL CONSTRAINTS FOR VEHICULAR TRAFFIC.
3. A LARGE FLUME PIPE OF AN ADEQUATE SIZE TO SUPPORT NORMAL CHANNEL FLOW SHALL THEN BE INSTALLED IN THE STREAM BED ACROSS THE PROPOSED TRENCH CENTERLINE. COARSE AGGREGATE, MINIMUM SIZE 2", OR RIPRAP SHALL BE PLACED CLOSE TO EACH END OF THE FLUME PIPE TO FORCE THE WATER TO FLOW THROUGH THE FLUME PIPE.
4. THE WATER CAN THEN BE PUMPED FROM WITHIN THE DAMMED-OFF AREA INTO AN APPROVED DEWATERING STRUCTURE. SEE DETAILS ESC-42 THROUGH ESC-44. THE TRENCH CAN THEN BE DUG UNDER THE FLUME PIPE. THE PIPE SECTIONS WILL THEN BE INSTALLED TO THE PROPER DEPTH UNDER THE FLUME PIPE. AFTER PIPE SECTIONS ARE INSTALLED, THE DITCH WILL BE BACKFILLED AND RESTABILIZED.
5. RESTABILIZATION SHALL CONSIST OF THE INSTALLATION OF UNGROUTED RIPRAP ON ALL DISTURBED STREAMBANK AREAS, OR ON THE AREA 6 FEET EITHER SIDE OF THE CENTERLINE OF THE UTILITY TRENCH, WHICHEVER IS GREATER. SLOPES SHALL BE 3H:1V OR STEEPER. REFER TO SECTION 2605, RIPRAP FOR INSTALLATION REQUIREMENTS. FOR SLOPES OF 3H:1V OR FLATTER, VEGETATIVE STABILIZATION MAY BE USED, PENDING APPROVAL BY THE PLAN-APPROVING AUTHORITY OR INSPECTION AUTHORITY. STABILIZATION OF THE STREAMBED AND BANKS AND THE APPROACH AREAS SHOULD OCCUR IMMEDIATELY FOLLOWING THE ATTAINMENT OF FINAL GRADE.
6. AFTER COMPLETION OF BACKFILLING, RESTORATION OF THE BANKS, AND LEVELING OF STREAM BED, THE FLUME PIPE CAN BE REMOVED. THE GRAVEL CAN BE REMOVED OR SPREAD IN THE STREAM BED DEPENDING ON PERMIT REQUIREMENTS. SEDIMENT CONTROL IN APPROACH AREAS SHALL NOT BE REMOVED UNTIL ALL CONSTRUCTION IS COMPLETED IN THE CROSSING AREA. ALL GROUND CONTOURS SHALL BE RETURNED TO THEIR ORIGINAL CONDITION.

B) INSPECTION AND MAINTENANCE:

CARE MUST BE TAKEN TO INSPECT ANY STREAM CROSSING AREA AT THE END OF EACH DAY TO ENSURE THAT CONSTRUCTION MATERIALS ARE POSITIONED SECURELY SO THAT THE WORK AREA STAYS DRY AND THAT CONSTRUCTION MATERIALS FLOAT DOWNSTREAM.

AMERICAN PUBLIC WORKS ASSOCIATION		
APWA	KANSAS CITY METROPOLITAN CHAPTER	
FLUME PIPE CROSSING	STANDARD DRAWING NUMBER ESC-37	
	ADOPTED:	

J:\KCMOAPWA\27787\CIVIL\details\draft 4-22-03\division III\ESC-37.DWG 04-23-2003 13:21 JRA

COFFERDAM CROSSING

EXISTING STREAM WIDTH (W)

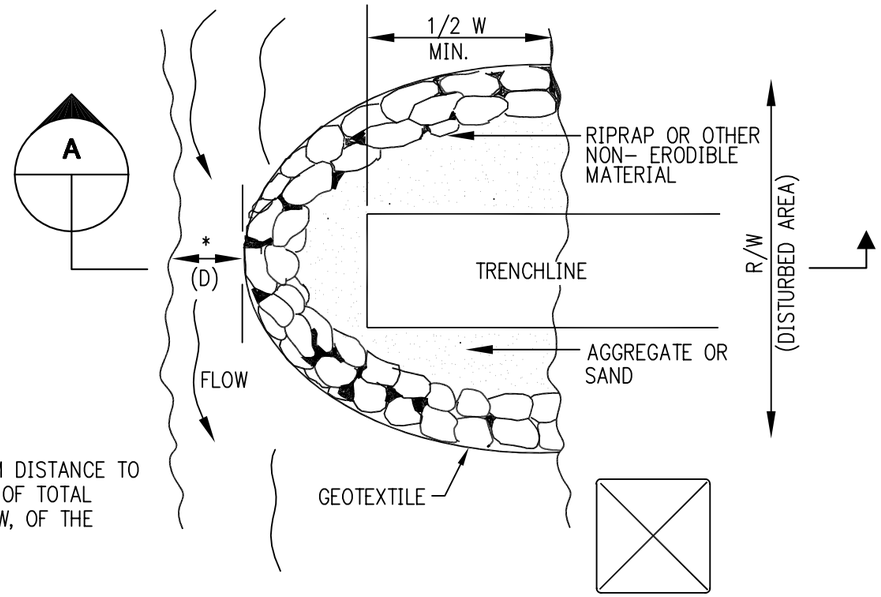

NOTE:

* (D)
MINIMUM DISTANCE TO BE 25% OF TOTAL WIDTH, W, OF THE STREAM.

PLAN

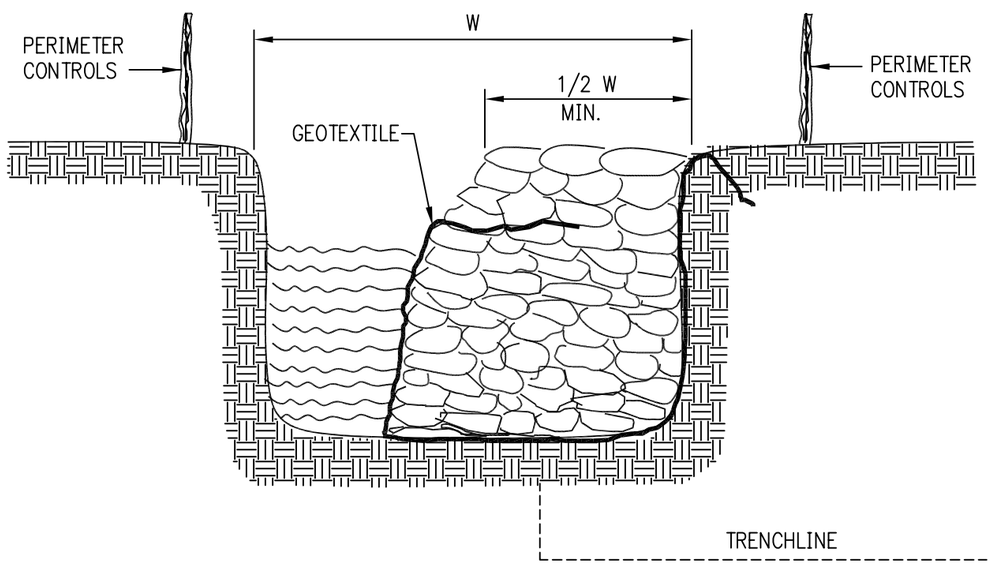

SECTION A-A

COFFERDAM CROSSING NOTES:

A) GENERAL NOTES:

1. TO BE USED WHEN STREAM DIVERSION IS NOT PRACTICAL AND STREAM IS 10 FEET OR WIDER TO MAKE COFFERDAM INSTALLATION PRACTICAL.
2. CONSTRUCTION IS TO BE PERFORMED DURING LOW FLOW PERIODS.
3. CROSSING SHALL BE ACCOMPLISHED IN A MANNER THAT WILL NOT PROHIBIT THE FLOW OF THE STREAM.
4. AS WITH ALL UTILITY LINE CROSSINGS, APPROACH AREAS MUST BE CONTROLLED WITH PERIMETER MEASURES SUCH AS SEDIMENT FENCE.
5. REMOVE LARGE ROCKS, WOODY VEGETATION, OR OTHER MATERIAL FROM THE STREAMBED AND BANKS THAT MAY GET IN THE WAY OF PLACING THE RIPRAP, SANDBAGS, SHEET METAL, OR WOOD PLANKS OR INSTALLING THE UTILITY PIPE OR LINE.
6. FORM A COFFERDAM BY PLACING THE RIPRAP IN A SEMICIRCLE ALONG THE SIDE OF THE STREAM IN WHICH THE UTILITY INSTALLATION WILL BEGIN. IT MUST BE SURROUNDED AND UNDERLAIN WITH GEOTEXTILE. THE HEIGHT OF AND AREA WITHIN THE DAM WILL DEPEND UPON THE SIZE OF THE WORK AREA AND THE AMOUNT OF STREAM FLOW. STACK MATERIALS AS HIGH AS NECESSARY TO KEEP WATER FROM OVERTOPPING THE DAM AND FLOODING THE WORK AREA. WHEN THE STREAM FLOW IS SUCCESSFULLY DIVERTED BY THE COFFERDAM, DEWATER THE WORK AREA AND STABILIZE IT WITH AGGREGATE OR SAND. DISCHARGE THE WATER INTO A SEDIMENT TRAPPING DEVICE. DEWATERING DEVICES ARE LOCATED ON DETAILS ESC-41 THROUGH ESC-43.
7. INSTALL THE UTILITY PIPE OR LINE IN HALF THE STREAMBED. REMOVE THE RIPRAP OR OTHER MATERIALS AND BEGIN PLACING THEM ON THE OTHER SIDE OF THE STREAM.
8. RESTABILIZATION SHALL CONSIST OF THE INSTALLATION OF UNGROUTED RIPRAP ON ALL DISTURBED STREAMBANK AREAS OR ON THE AREA 6 FEET TO BOTH SIDES OF THE CENTERLINE OF ITS UTILITY TRENCH, WHICHEVER IS GREATER. SLOPES SHALL BE 3H:1V OR STEEPER. REFER TO THE RIPRAP SECTION FOR INSTALLATION REQUIREMENTS. FOR SLOPES OF 3H:1V OR FLATTER, VEGETATIVE STABILIZATION MAY BE USED, PENDING APPROVAL BY PLAN-APPROVING AUTHORITY OR INSPECTION AUTHORITY. STABILIZATION OF STREAMBED AND BANKS AND APPROACH AREAS SHOULD OCCUR IMMEDIATELY FOLLOWING THE ATTAINMENT OF FINAL GRADE.

B) INSPECTION AND MAINTENANCE:

CARE MUST BE TAKEN TO INSPECT ANY STREAM CROSSING AREA AT THE END OF EACH DAY TO MAKE SURE THAT THE CONSTRUCTION MATERILAS ARE POSITIONED SECURELY. THIS WILL ENSURE THAT THE WORK AREA STAYS DRY AND THAT NO CONSTRUCTION MATERILAS FLOAT DOWNSTREAM.

SOURCE: MODIFIED FROM VA. DCR, 1992

AMERICAN PUBLIC WORKS ASSOCIATION	
APWA	KANSAS CITY METROPOLITAN CHAPTER
COFFERDAM CROSSING	STANDARD DRAWING NUMBER ESC-38 ADOPTED:

J:\KCMOAPWA\27787\CIVIL\details\draft 4-22-03\division III\ESC-38.DWG 04-23-2003 13:29 JRA

TEMPORARY CULVERT CROSSING

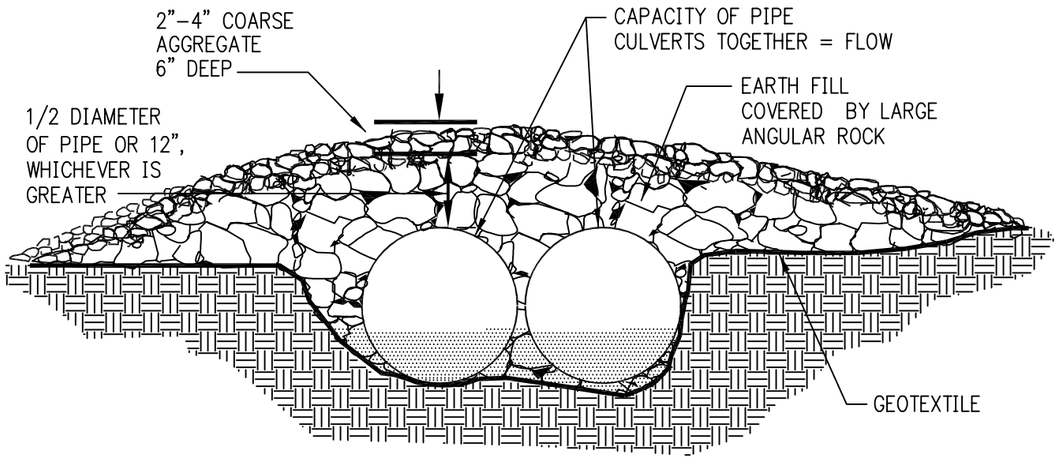

ELEVATION
NOT TO SCALE

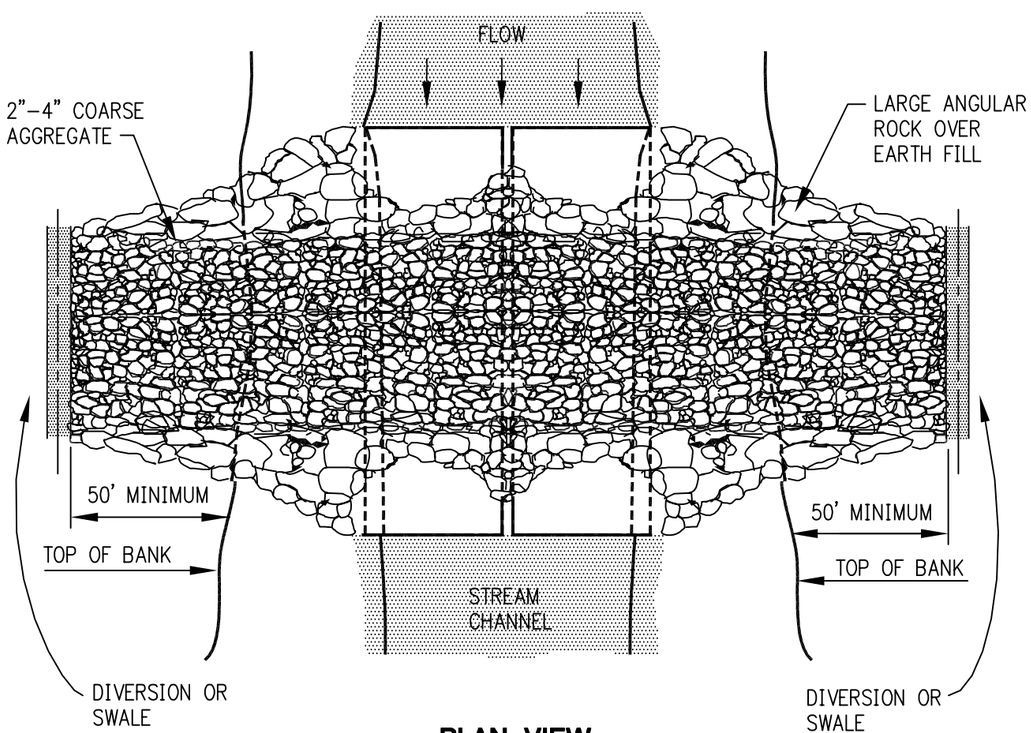

PLAN VIEW
NOT TO SCALE

SOURCE: MODIFIED FROM VA. DCR, 1992

TEMPORARY CULVERT CROSSING NOTE:

A) GENERAL NOTES:

1. CLEARING AND EXCAVATION OF THE STREAM BED AND BANKS SHALL BE KEPT TO A MINIMUM.
2. THE INVERT ELEVATION OF THE CULVERT SHALL BE INSTALLED ON THE NATURAL STREAMBED GRADE TO MINIMIZE INTERFERENCE WITH FISH MIGRATION.
3. GEOTEXTILE SHALL BE PLACED ON THE STREAMBED AND STREAMBANKS PRIOR TO PLACEMENT OF THE PIPE CULVERT AND AGGREGATE. THE GEOTEXTILE SHALL COVER THE STREAMBED AND EXTEND A MINIMUM OF 6 INCHES AND A MAXIMUM OF 1 FOOT BEYOND THE END OF THE CULVERT AND BEDDING MATERIAL. FILTER CLOTH REDUCES SETTLEMENT AND IMPROVES CROSSING STABILITY.
4. THE CULVERT SHALL EXTEND A MINIMUM OF 1 FOOT BEYOND THE UPSTREAM AND DOWNSTREAM TOE OF THE AGGREGATE PLACED AROUND THE CULVERT. IN NO CASE SHALL THE CULVERT EXCEED 40 FEET IN LENGTH.
5. THE CULVERT SHALL BE COVERED WITH A MINIMUM OF 1 FOOT OF AGGREGATE. IF MULTIPLE CULVERTS ARE USED, THEY SHALL BE SEPARATED BY AT LEAST 12 INCHES OF COMPACTED AGGREGATE FILL.
6. WHEN THE CROSSING HAS SERVED ITS PURPOSE, ALL STRUCTURES INCLUDING CULVERTS, BEDDING, AND GEOTEXTILE MATERIALS SHALL BE REMOVED. REMOVAL OF THE STRUCTURE AND CLEAN-UP OF THE AREA SHALL BE ACCOMPLISHED WITHOUT CONSTRUCTION EQUIPMENT WORKING IN THE CHANNEL.
7. UPON REMOVAL OF THE STRUCTURE, THE STREAM SHALL IMMEDIATELY BE SHAPED TO ITS ORIGINAL CROSS-SECTION AND PROPERLY STABILIZED.

B) INSPECTION AND MAINTENANCE:

CARE MUST BE TAKEN TO INSPECT ANY STREAM CROSSING AREA AT THE END OF EACH DAY TO MAKE SURE THAT THE CONSTRUCTION MATERIALS ARE POSITIONED SECURELY. THIS WILL ENSURE THAT THE WORK AREA STAYS DRY AND THAT NO CONSTRUCTION MATERIALS FLOAT DOWNSTREAM.

AMERICAN PUBLIC WORKS ASSOCIATION	
APWA	KANSAS CITY METROPOLITAN CHAPTER
TEMPORARY CULVERT CROSSING	STANDARD DRAWING NUMBER ESC-39 ADOPTED:

J:\KCMOAPWA\27787\CIVIL\details\draft 4-22-03\division III\ESC-39.DWG 04-23-2003 13:35 JRA

TEMPORARY BRIDGE CROSSING

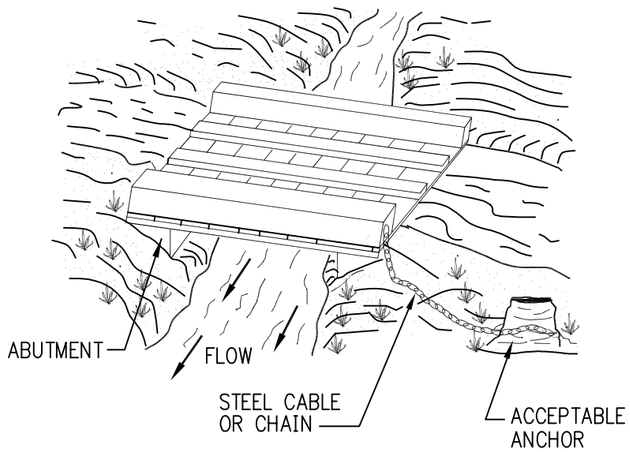

ISOMETRIC VIEW

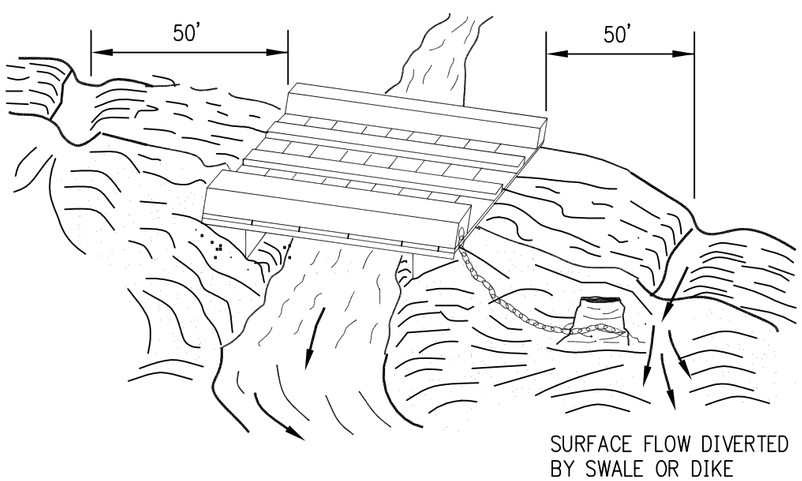

ISOMETRIC VIEW
NOT TO SCALE

TEMPORARY BRIDGE CROSSING NOTES:

A) GENERAL NOTES:

1. CLEARING AND EXCAVATION OF THE STREAM BED AND BANKS SHALL BE KEPT TO A MINIMUM.
2. THE TEMPORARY BRIDGE STRUCTURE SHALL BE CONSTRUCTED AT OR ABOVE BANK ELEVATION TO PREVENT THE ENTRAPMENT OF FLOATING MATERIALS AND DEBRIS.
3. ABUTMENTS SHALL BE PLACED PARALLEL TO AND ON STABLE BANKS.
4. BRIDGES SHALL BE CONSTRUCTED TO SPAN THE ENTIRE CHANNEL. IF THE CHANNEL WIDTH EXCEEDS 8 FEET, AS MEASURED FROM TOP-OF-BANK, A FOOTING, PIER, OR BRIDGE SUPPORT MAY BE CONSTRUCTED WITHIN THE WATERWAY. ONE ADDITIONAL FOOTING, PIER, OR BRIDGE SUPPORT WILL BE PERMITTED FOR EACH ADDITIONAL 8-FOOT WIDTH OF THE CHANNEL. NO FOOTING, PIER, OR BRIDGE SUPPORT, HOWEVER, WILL BE PERMITTED WITHIN THE CHANNEL FOR WATERWAYS WHICH ARE LESS THAN 8 FEET WIDE.
5. STRINGERS SHALL EITHER BE LOGS, SAWN TIMBER, PRESTRESSED CONCRETE BEAMS, METAL BEAMS, OR OTHER APPROVED MATERIALS.
6. DECKING MATERIALS SHALL BE OF SUFFICIENT STRENGTH TO SUPPORT THE ANTICIPATED LOAD. ALL DECKING MEMBERS SHALL BE PLACED PERPENDICULAR TO THE STRINGERS, BUTTED TIGHTLY, AND SECURELY FASTENED TO THE STRINGERS. DECKING MATERIALS MUST BE BUTTED TIGHTLY TO PREVENT ANY SOIL MATERIAL TRACKED ONTO THE BRIDGE FROM FALLING INTO THE WATERWAY BELOW.
7. RUN PLANKING SHALL BE SECURELY FASTENED TO THE LENGTH OF THE SPAN. ONE RUN PLANK SHALL BE PROVIDED FOR EACH TRACK OF THE EQUIPMENT WHEELS. ALTHOUGH RUN PLANKS ARE OPTIONAL, THEY MAY BE NECESSARY TO PROPERLY DISTRIBUTE LOADS.
8. CURBS OR FENDERS MAY BE INSTALLED ALONG THE OUTER SIDES OF THE DECK AND ARE AN OPTION WHICH WILL PROVIDE ADDITIONAL SAFETY.
9. BRIDGES SHALL BE SECURELY ANCHORED AT ONLY ONE END USING STEEL CABLE OR CHAIN. ANCHORING AT ONLY ONE END WILL PREVENT CHANNEL OBSTRUCTION IN THE EVENT THAT FLOODWATERS FLOAT THE BRIDGE. ACCEPTABLE ANCHORS ARE LARGE TREES, LARGE BOULDERS, OR DRIVEN STEEL ANCHORS. ANCHORING SHALL BE SUFFICIENT TO PREVENT THE BRIDGE FROM FLOATING DOWNSTREAM AND POSSIBLY CAUSING AN OBSTRUCTION TO THE FLOW.
10. ALL AREAS DISTURBED DURING INSTALLATION SHALL BE STABILIZED WITHIN 7 CALENDAR DAYS OF THAT DISTURBANCE. WHEN THE TEMPORARY BRIDGE IS NO LONGER NEEDED, ALL STRUCTURES INCLUDING ABUTMENTS AND OTHER BRIDGING MATERIALS SHOULD BE REMOVED IMMEDIATELY.
11. FINAL CLEAN-UP SHALL CONSIST OF REMOVAL OF THE TEMPORARY BRIDGE FROM THE WATERWAY, PROTECTION OF BANKS FROM EROSION, AND REMOVAL OF ALL CONSTRUCTION MATERIALS. ALL REMOVED MATERIALS SHALL BE STORED OUTSIDE THE FLOOD PLAIN OF THE STREAM. REMOVAL OF THE BRIDGE AND CLEAN-UP OF THE AREA SHALL BE ACCOMPLISHED WITHOUT CONSTRUCTION EQUIPMENT WORKING IN THE CHANNEL.

B) INSPECTION AND MAINTENANCE:

CARE MUST BE TAKEN TO INSPECT ANY STREAM CROSSING AREA AT THE END OF EACH DAY TO MAKE SURE THAT THE CONSTRUCTION MATERIALS ARE POSITIONED SECURELY. THIS WILL ENSURE THAT THE WORK AREA STAYS DRY AND THAT NO CONSTRUCTION MATERIALS FLOAT DOWNSTREAM.

SOURCE: MODIFIED FROM VA. DCR, 1992

AMERICAN PUBLIC WORKS ASSOCIATION	
APWA	KANSAS CITY METROPOLITAN CHAPTER
TEMPORARY BRIDGE CROSSING	STANDARD DRAWING NUMBER ESC-40 ADOPTED:

J:\KCMOAPWA\27787\CIVIL\details\draft 4-22-03\division III\ESC-40.DWG 04-23-2003 13:42 JRA

STRAW BALE/SEDIMENT FENCE PIT

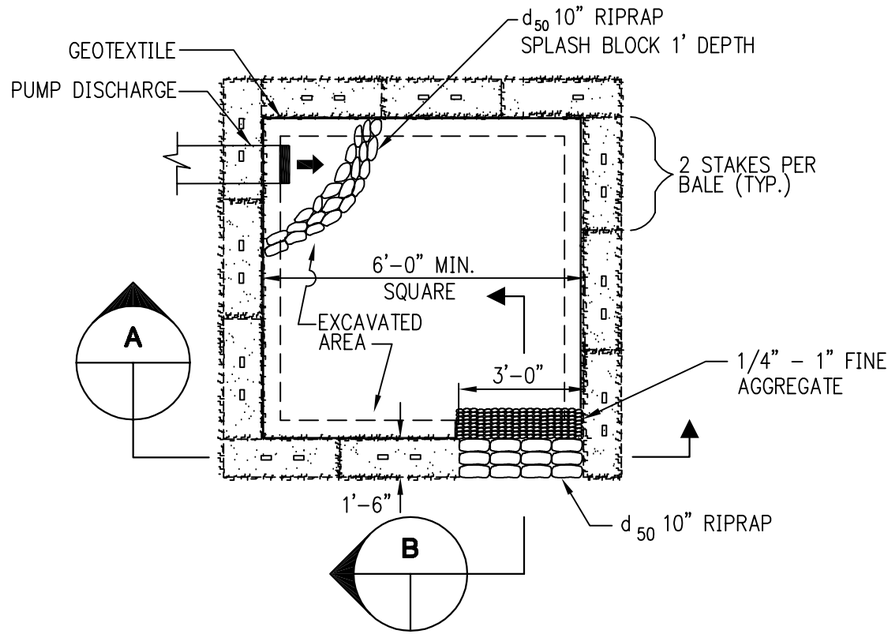

PLAN VIEW
NOT TO SCALE

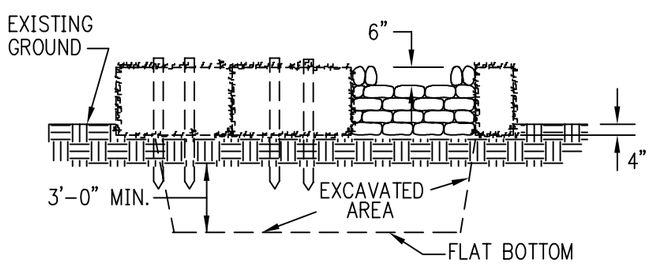

CROSS SECTION A-A
NOT TO SCALE

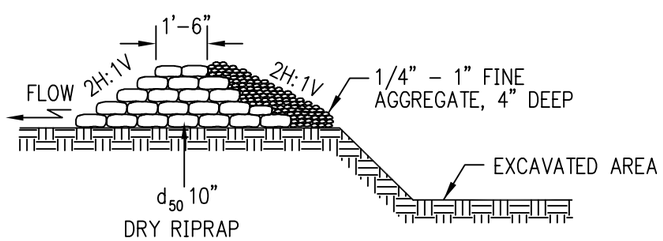

CROSS SECTION B-B
NOT TO SCALE

SOURCE: MODIFIED FROM VA. DCR, 1992

STRAW BALE/SEDIMENT FENCE PIT NOTES:

A) GENERAL NOTES:

1. PIT SHALL CONSIST OF STRAW BALES, SEDIMENT FENCE, A STONE OUTLET THAT IS A COMBINATION OF RIPRAP AND AGGREGATE, AND A WET STORAGE PIT.
2. THE STRUCTURE MUST HAVE A CAPACITY WHICH IS DICTATED BY THE FOLLOWING FORMULA:

   PUMP DISCHARGE (GPM) X 16 = CUBIC FEET OF STORAGE REQUIRED

3. IN CALCULATING THE CAPACITY, INCLUDE THE VOLUME AVAILABLE FROM THE FLOOR OF THE EXCAVATION TO THE CREST OF THE STONE WEIR.
4. THE EXCAVATED AREA SHOULD BE A MINIMUM OF 3 FEET BELOW THE BASE OF THE STRAW BALES OR SEDIMENT FENCE.
5. THE PERIMETER MUST BE INSTALLED AS PER THE GUIDELINES FOUND IN SECTOIN #, STRAW BALE BARRIER AND IN SECTION #, SEDIMENT FENCE.
6. ONCE THE WATER LEVEL NEARS THE CREST OF THE STONE WEIR, THE PUMP MUST BE SHUT OFF WHILE THE STRUCTURE DRAINS DOWN TO THE WET STORAGE ELEVATION.
7. THE WET STORAGE PIT MAY BE DEWATERED ONLY AFTER A MINIMUM OF 6 HOURS OF SEDIMENT SETTLING TIME. THIS EFFLUENT SHOULD BE PUMPED ACROSS A WELL-VEGETATED AREA OR THROUGH A SEDIMENT FENCE PRIOR TO ENTERING A WATERCOURSE.
8. ONCE THE WET STORAGE AREA BECOMES FILLED TO HALF OF THE EXCAVATED DEPTH, ACCUMULATED SEDIMENT SHALL BE REMOVED AND PROPERLY DISPOSED OF.
9. ONCE THE DEVICE HAS BEEN REMOVED, GROUND CONTOURS WILL BE RETURNED TO ORIGINAL CONDITION.

B) INSPECTION AND MAINTENANCE:

1. THE DEWATERING DEVICES MUST BE INSPECTED FREQUENTLY AND REPAIRED OR REPLACED ONCE THE SEDIMENT BUILD-UP PREVENTS THE STRUCTURE FROM FUNCTIONING AS DESIGNED.
2. THE ACCUMULATED SEDIMENT WHICH IS REMOVED FROM A DEWATERING DEVICE MUST BE SPREAD ON SITE AND STABILIZED OR DISPOSED OF AT AN APPROVED DISPOSAL SITE AS PER APPROVED PLAN.

AMERICAN PUBLIC WORKS ASSOCIATION	
APWA	KANSAS CITY METROPOLITAN CHAPTER
STRAW BALE/ SEDIMENT FENCE PIT	STANDARD DRAWING NUMBER ESC-41 ADOPTED:

J:\KCMOAPWA\27787\CIVIL\details\draft 4-22-03\division III\ESC-41.DWG 04-23-2003 13:52 JRA

DEWATER BOX

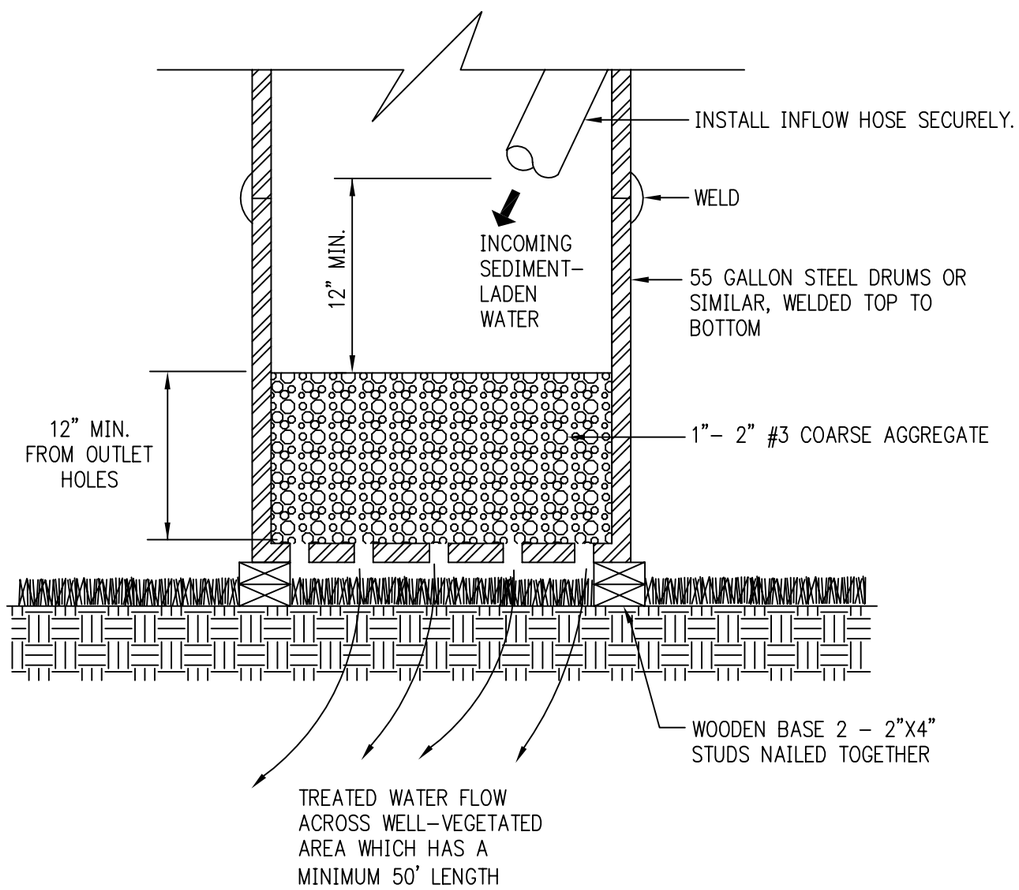

ELEVATION VIEW
NOT TO SCALE

DEWATER BOX NOTES:

A) GENERAL NOTES:

1. THE BOX SELECTED SHOULD BE MADE OF STEEL, STURDY WOOD, OR OTHER MATERIALS SUITABLE TO HANDLE THE PRESSURE REQUIREMENTS IMPOSED BY THE VOLUME OF WATER. FIFTY-FIVE GALLON DRUMS WELDED TOP TO BOTTOM ARE NORMALLY READILY AVAILABLE AND IN MOST CASES WILL SUFFICE.

2. BOTTOM OF THE BOX SHALL BE MADE POROUS BY DRILLING HOLES.

3. COARSE AGGREGATE SHALL BE PLACED OVER THE HOLES AT A MINIMUM DEPTH OF 12 INCHES. METAL HARDWARE CLOTH MAY BE REQUIRED BETWEEN THE AGGREGATE AND THE HOLES IF HOLES ARE DRILLED LARGER THAN THE MAJORITY OF THE STONE.

4. AS A RESULT OF THE FAST RATE OF FLOW THROUGH THE AGGREGATE, THE EFFLUENT MUST BE DIRECTED OVER A WELL-VEGETATED STRIP AT LEAST 50 FEET LONG AFTER LEAVING THE BASE OF THE FILTER BOX.

5. THE BOX SHALL BE SIZED AS FOLLOWS:

   PUMP DISCHARGE (GPM) X 16 = CUBIC FEET OF STORAGE REQUIRED

6. ONCE THE WATER LEVEL NEARS THE TOP OF THE BOX, THE PUMP MUST BE SHUT OFF WHILE THE BOX DRAINS AND ADDITIONAL CAPACITY IS MADE AVAILABLE.

7. THE BOX SHALL BE DESIGNED TO ALLOW FOR EMERGENCY FLOW OVER THE TOP.

   NOTE: USING A DEWATER BOX ONLY ALLOWS FOR MINIMAL SETTLING TIME FOR SEDIMENT PARTICLES; THEREFORE, IT SHOULD ONLY BE USED WHEN SITE CONDITIONS RESTRICT THE USE OF THE OTHER METHODS.

B) INSPECTION AND MAINTENANCE:

1. THE DEWATERING DEVICES MUST BE INSPECTED FREQUENTLY AND REPAIRED OR REPLACED ONCE THE SEDIMENT BUILD-UP PREVENTS THE STRUCTURE FROM FUNCTIONING AS DESIGNED.

2. CLEAN-OUT OF THE BOX IS REQUIRED ONCE ONE THIRD OF THE ORIGINAL CAPACITY IS DEPLETED DUE TO SEDIMENT ACCUMULATION. THE TANK SHALL BE CLEARLY MARKED SHOWING THE CLEAN-OUT POINT.

3. THE ACCUMULATED SEDIMENT WHICH IS REMOVED FROM A DEWATERING DEVICE MUST BE SPREAD ON SITE AND STABILIZED OR DISPOSED OF AT AN APPROVED DISPOSAL SITE AS PER APPROVED PLAN.

SOURCE: MODIFIED FROM VA. DCR, 1992

AMERICAN PUBLIC WORKS ASSOCIATION	
APWA	KANSAS CITY METROPOLITAN CHAPTER
DEWATER BOX	STANDARD DRAWING NUMBER ESC-42 ADOPTED:

J:\KCMOAPWA\27787\CIVIL\details\draft 4-22-03\division III\ESC-42.DWG 04-23-2003 13:58 JRA

DIRT BAG®

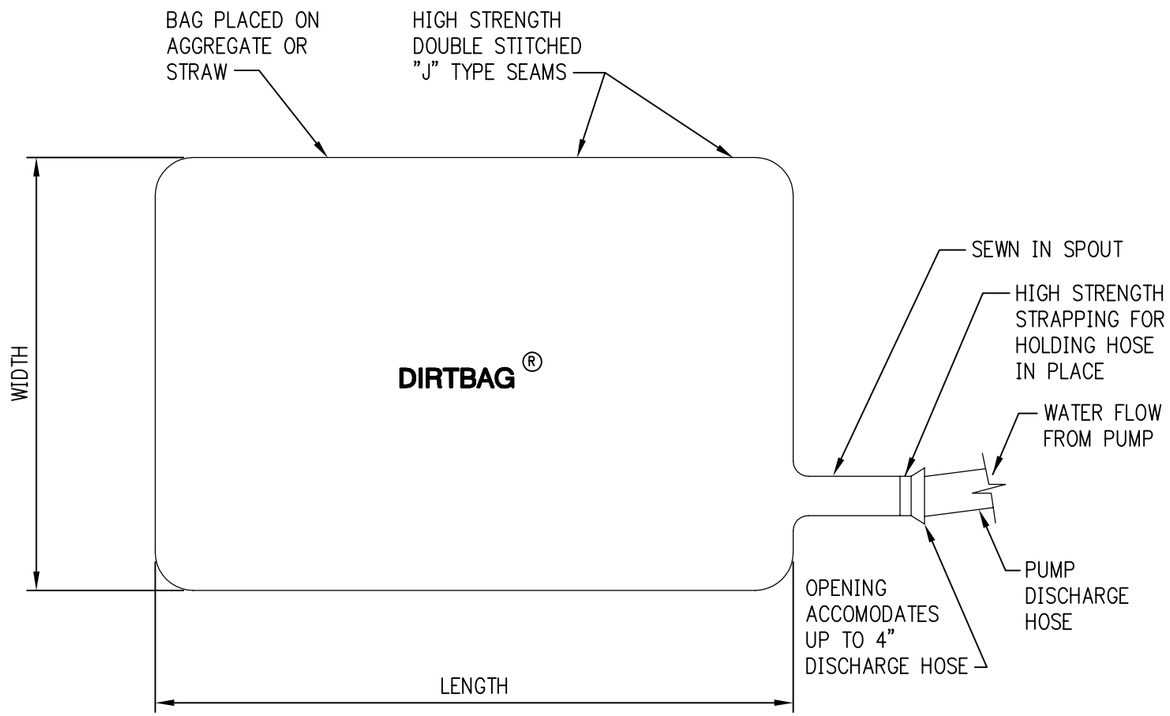

TOP VIEW

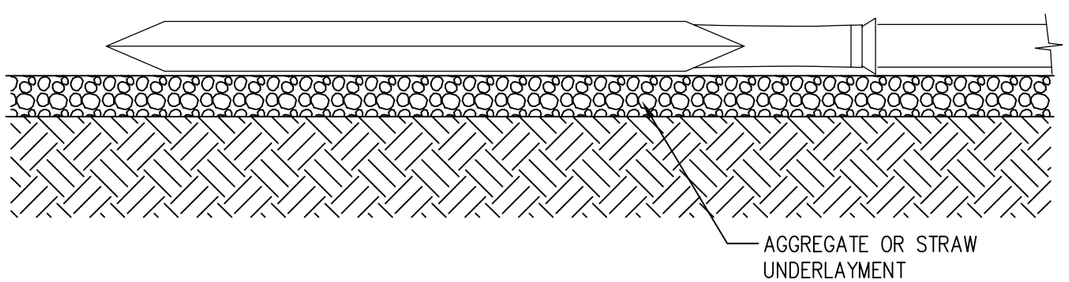

SIDE VIEW

DIRTBAG® NOTES:

A) GENERAL NOTES:

1. THE DIRTBAG® WILL HAVE AN OPENING LARGE ENOUGH TO ACCOMMODATE A 4" DISCHARGE HOSE WITH ATTACHED STRAP TO PREVENT THE PUMPED WATER FROM ESCAPING THE DIRTBAG® WITHOUT BEING TREATED.

2. INSTALL THE DIRTBAG® ON A SLOPE. IT SHOULD BE PLACED SO THE INCOMING WATER FLOWS THROUGH THE DIRTBAG®. DO NOT ALLOW WATER TO FLOW OUT OF THE OPENING WITHOUT BEING TREATED THROUGH THE FABRIC. TO INCREASE THE EFFICIENCY OF THE FILTRATION, THE BAG SHOULD BE PLACED ON AN AGGREGATE BED TO ALLOW WATER TO FLOW THROUGH ALL SURFACES OF THE BAG.

3. DISPOSAL MAY BE ACCOMPLISHED AS DIRECTED BY THE ENGINEER. IF THE SITE ALLOWS, THE DIRTBAG® MAY BE CUT OPEN AND SEEDED, REMOVING THE VISIBLE FABRIC. THE DIRTBAG® IS STRONG ENOUGH TO BE LIFTED IF IT MUST BE HAULED AWAY.

B) INSPECTION AND MAINTENANCE:

THE DIRTBAG® SHOULD BE CONSIDERED FULL WHEN IT IS IMPRACTICAL FOR THE BAG TO TREAT SEDIMENT LADEN RUNOFF AT A REASONABLE RATE, AND SHOULD BE REPLACED WITH A NEW DIRTBAG®.

SOURCE: ACF ENVIRONMENTAL, INC.

AMERICAN PUBLIC WORKS ASSOCIATION	
APWA	KANSAS CITY METROPOLITAN CHAPTER
DIRTBAG®	STANDARD DRAWING NUMBER ESC-43 ADOPTED:

J:\KCMOAPWA\27787\CIVIL\details\draft 4-22-03\division III\ESC-43.DWG 04-23-2003 14:07 JRA

TURBIDITY CURTAIN

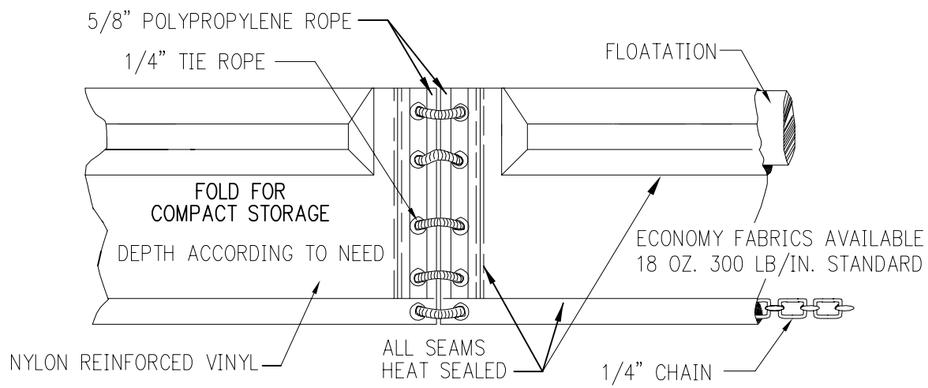

TYPE I

NOT TO SCALE

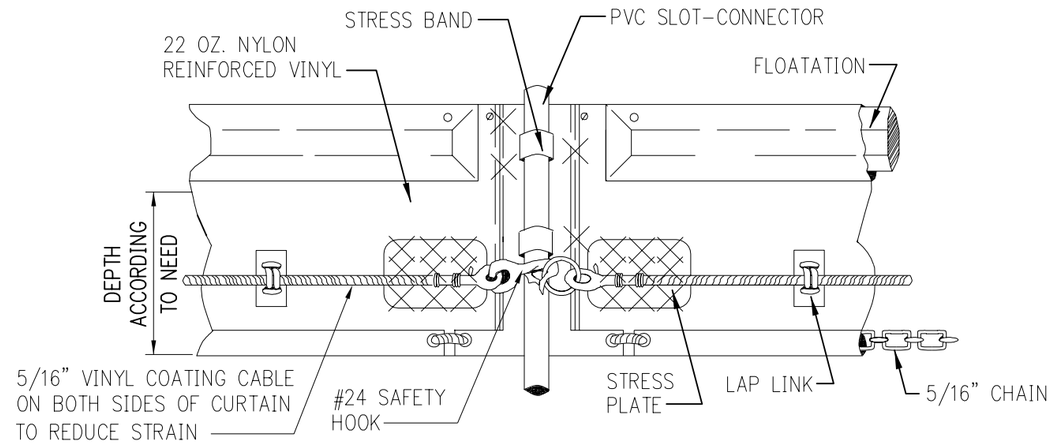

TYPE III

NOT TO SCALE

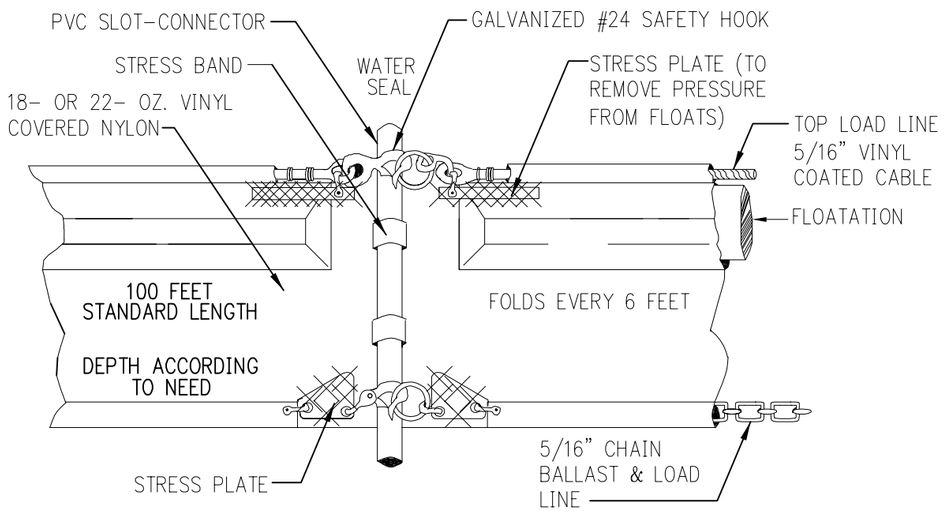

TYPE II

NOT TO SCALE

TURBIDITY CURTAIN NOTES:

A) GENERAL NOTES:

1. TYPE I IS DESIGNED FOR USE IN SMALL LAKES AND PONDS WITH LITTLE OR NO WIND CURRENT AND LIGHT TURBIDITY.

2. TYPE II IS DESIGNED FOR USE ON RIVERS AND STREAMS, LARGE OPEN LAKES, BAYS, AND BEACHES WITH MODERATE CURRENTS AND WIND EXPOSURE.

3. TYPE III IS SIMILAR TO TYPE II ONLY WITH ADDITIONAL STRESS PLATES OR SPECIAL FABRIC TO HELP RELIEVE STRESSES CAUSED BY STRONG CURRENTS.

B) INSPECTION AND MAINTENANCE:

1. THE PRIMARY CARE THE BARRIER REQUIRES WHILE IN USE CONSISTS OF KEEPING THE ANCHOR LINES SECURE AND PROPERLY POSITIONED TO ALLOW THE BARRIER TO FUNCTION AS EFFICIENTLY AS POSSIBLE.

2. SHOULD REPAIRS TO THE GEOTEXTILE FABRIC BECOME NECESSARY, THERE ARE NORMALLY REPAIR KITS AVAILABLE FROM MANUFACTURERS; MANUFACTURER'S INSTRUCTIONS MUST BE FOLLOWED TO ENSURE THE ADEQUACY OF THE REPAIR.

3. WHEN THE CURTAIN IS NO LONGER REQUIRED AS DETERMINED BY THE INSPECTOR, THE CURTAIN AND RELATED COMPONENTS SHALL BE REMOVED SO AS TO MINIMIZE TURBIDITY. REMAINING SEDIMENT SHALL BE SUFFICIENTLY SETTLED BEFORE REMOVING THE CURTAIN. SEDIMENT MAY BE REMOVED AND THE ORIGINAL DEPTH OR PLAN ELEVATION RESTORED. ANY SPOILS MUST BE TAKEN TO UPLAND AREA AND STABILIZED.

SOURCE: MODIFIED FROM VA. DCR, 1992

AMERICAN PUBLIC WORKS ASSOCIATION		
APWA	KANSAS CITY METROPOLITAN CHAPTER	
TURBIDITY CURTAIN	STANDARD DRAWING NUMBER ESC-44	
	ADOPTED:	

J:\KCMOAPWA\27787\CIVIL\details\draft 4-22-03\division III\Esc-44.dwg 04-23-2003 14:11 JRA

TURBIDITY CURTAIN TYPICAL LAYOUTS

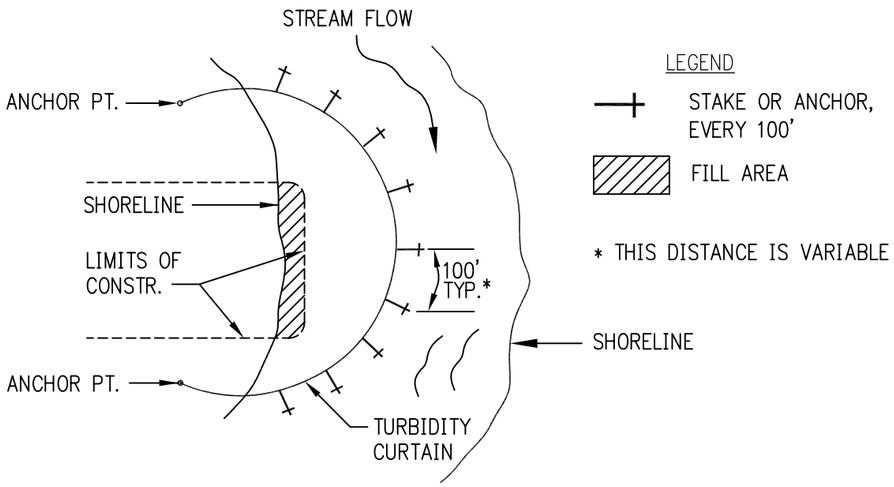

STREAMS, PONDS AND LAKES (PROTECTED AND NON-TIDAL)

NOT TO SCALE

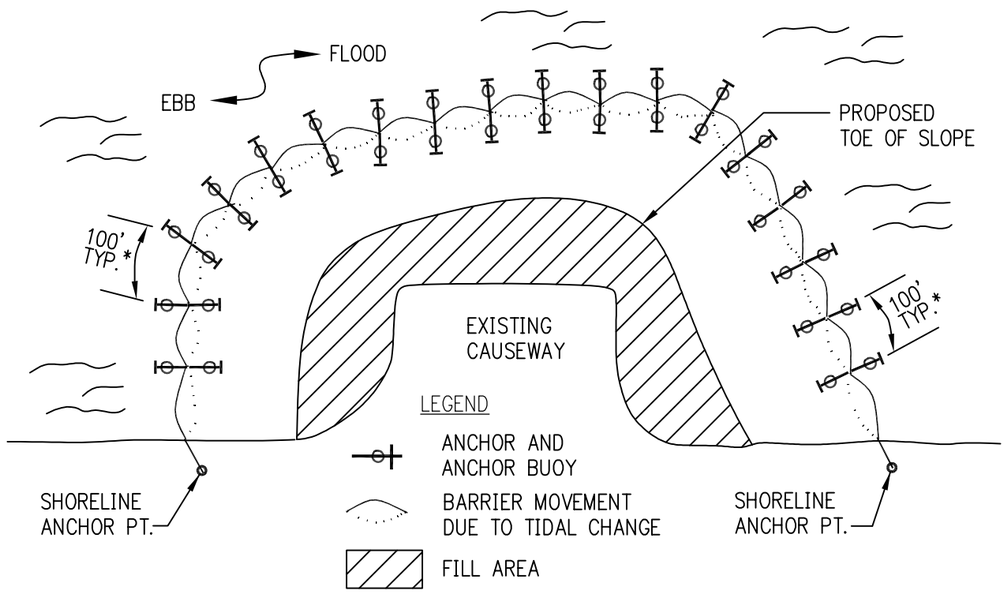

* THIS DISTANCE IS VARIABLE

TIDAL WATERS AND/OR HEAVY WIND AND WAVE ACTION

NOT TO SCALE

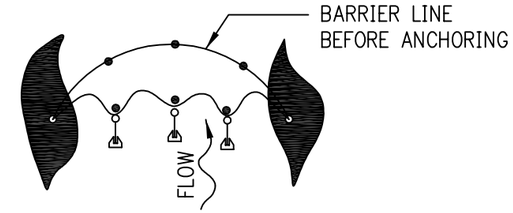

ACROSS CURRENT

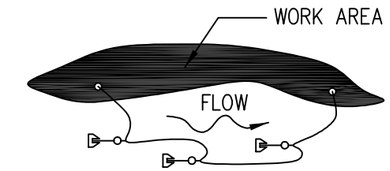

PARALLEL TO CURRENT

TURBIDITY CURTAIN INSTALLATIONS NOTES:

A) INSTALLATION IN CURRENTS:

1. THE CURRENT ADDS FORCES TO THE BARRIER WHICH MUST BE RESISTED BY THE LOAD LINES AND ANCHORING SYSTEM. TYPE II AND TYPE III BARRIERS ARE EQUIPED WITH TOP LOAD CABLES. THESE CABLES ARE USED TO TRANSMIT THE LOADS ON THE BARRIER TO THE ANCHOR POINTS AT THE TERMINAL ENDS AND TO ANY ANCHORS SPACED ALONG THE BARRIER LENGTH.
2. ADDITIONAL ANCHORS ARE GENERALLY REQUIRED AT THE JOINTS BETWEEN BARRIER SECTIONS AND SOMETIMES AT LOCATIONS ALONG THE BOTTOM BETWEEN JOINTS. WHEN THE CURRENT IS IN EXCESS OF 5 FEET PER SECOND, THE ENTIRE INSTALLATION SHOULD BE DESIGNED BY A QUALIFIED ENGINEER. A PLAN OF THE BARRIER PERIMETER SHOULD BE MADE KEEPING IN MIND THE DIRECTION AND VELOCITY OF THE CURRENT. LOADS ON THE BARRIER AND THE ANCHORING SYSTEM MUST BE DETERMINED. THE ANCHOR LOCATIONS SHOULD BE MARKED WITH BUOYS CONFORMING TO THE LOCATION PLAN BEFORE THE BARRIER IS DEPLOYED, AND THE ANCHORS, WHEN SET IN PLACE, SHOULD BE TESTED TO ENSURE THEIR HOLDING CAPACITY IS SUFFICIENT FOR THE LOADS EXPECTED.

B) FLOATING BARRIERS INSTALLATION IN CALM WATERS:

THIS BARRIER IS DEPLOYED AROUND THE CONSTRUCTION SITE WITHOUT ANY SPECIAL ANCHORAGE. IT MAY BE DESIRABLE TO PLACE STAKES AT POINTS ALONG THE PERIMETER TO HOLD THE BARRIER IN POSITION. THE ENDS SHOULD BE ANCHORED WELL UP ON THE SHORE. A STRONG STEEL OR WOOD POST IS GENERALLY ADEQUAET FOR THIS PURPOSE. THE LOWER EDGE OF THE CURTAIN SHOULD BE ABOVE THE BOTTOM AT THE LOWEST WATER LEVEL EXPECTED.

C) ACROSS CURRENT:

1. IF INTERMEDIATE ANCHOR POINTS ARE REQUIRED, THEY SHOULD BE IN PLACE WITH BUOYS MARKING THEIR LOCATION BEFORE DEPLOYING THE BARRIER.
2. SET THE TERMINAL END ANCHOR POINTS WELL UP ON SHORE. TIE OFF ONE END OF THE BARRIER TO THE UPSTREAM ANCHOR POINT. STRETCH THE FURLED BARRIER OUT ALONG THE BANK IF POSSIBLE OR ALONG THE SHORELINE AS CLOSE TO THE BANK AS POSSIBLE. WITH A BOAT TAKE THE FREE END OF THE BARRIER TO THE OPPOSITE SHORE AND SECURE IT. FROM THE UPSTREAM SIDE OF THE BARRIER USE THE BOAT TO BRING THE BARRIER CONNECTION POINTS BACK TO THE MATCHING INTERMEDIATE ANCHOR POINTS. AFTER ALL ANCHOR POINTS ARE CONNECTED, UNFURL THE BARRIER.

D) PARALLEL TO CURRENT:

1. IF INTERMEDIATE ANCHOR POINTS ARE REQUIRED, THEY SHOULD BE IN PLACE WITH BUOYS MARKING THEIR LOCATION BEFORE DEPLOYING THE BARRIER.
2. SET THE UPSTREAM AND DOWNSTREAM ANCHOR POINTS. TIE OFF ONE END OF THE BARRIER TO THE UPSTREAM ANCHOR POINT. ALLOW THE FURLED BARRIER TO DRIFT DOWNSTREAM. CONNECT THE INTERMEDIATE ANCHORS TO THE MATCHING BARRIER POINTS AS THE CURTAIN IS DEPLOYED. TIE OFF THE DOWNSTREAM END OF THE BARRIER. RETURN TO THE INTERMEDIATE ANCHOR POINTS AND MAKE ANY NECESSARY ADJUSTMENTS IN THE LINES. AFTER ALL ANCHOR POINTS ARE CONNECTED, UNFURL THE BARRIER.

AMERICAN PUBLIC WORKS ASSOCIATION	
APWA	KANSAS CITY METROPOLITAN CHAPTER
TURBIDITY CURTAIN INSTALLATIONS	STANDARD DRAWING NUMBER ESC-45 ADOPTED:

SOURCE: MODIFIED FROM VA. DCR, 1992 AND ©AER-FLO CANVAS PRODUCTS, INC., 1996

J:\KCMOAPWA\27787\CIVIL\details\draft 4-22-03\division III\ESC-45.DWG 04-23-2003 14:15 JRA

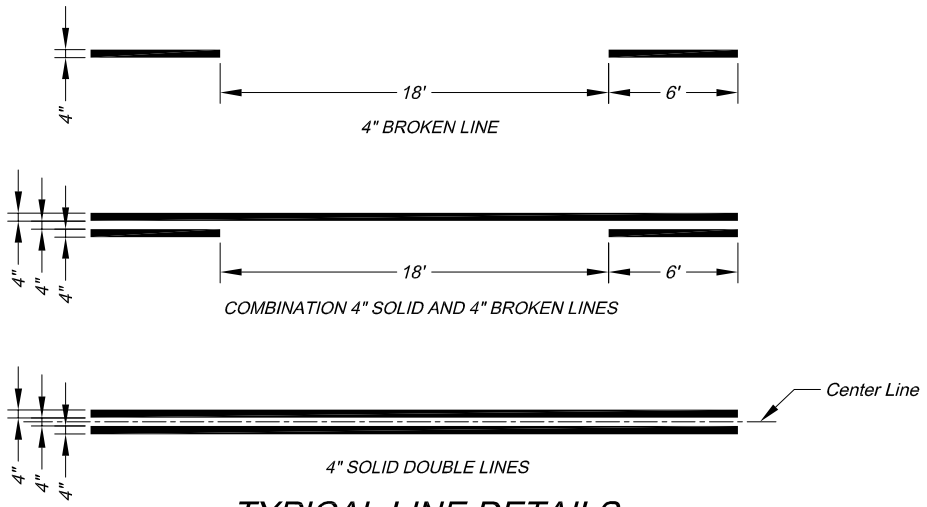

TYPICAL LINE DETAILS

NOTES:
1. All edge line, center line, and lane line pavement markings shall be 4" wide unless otherwise noted.
2. Edge lines shall be continuous solid white or yellow lines. Right side edge lines shall be solid white. Median or left side edge lines on divided roadways are to be solid yellow. Edge lines and center lines shall be continuous across driveways.

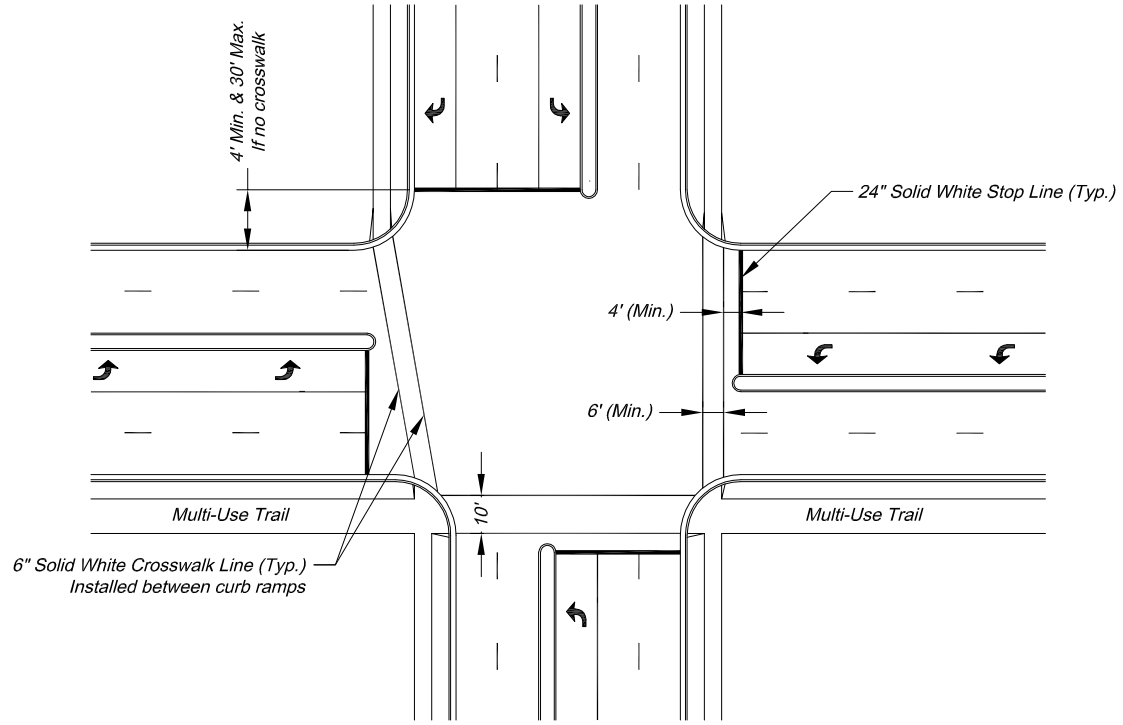

TYPICAL INTERSECTION MARKINGS

NOTES:
1. Transverse crosswalk lines shall be installed such that the distance between lines is at least 6 or 10 feet.
2. Stop lines are required at signalized intersections, on multi-lane stop controlled approaches, or in front of crosswalks at controlled intersections.

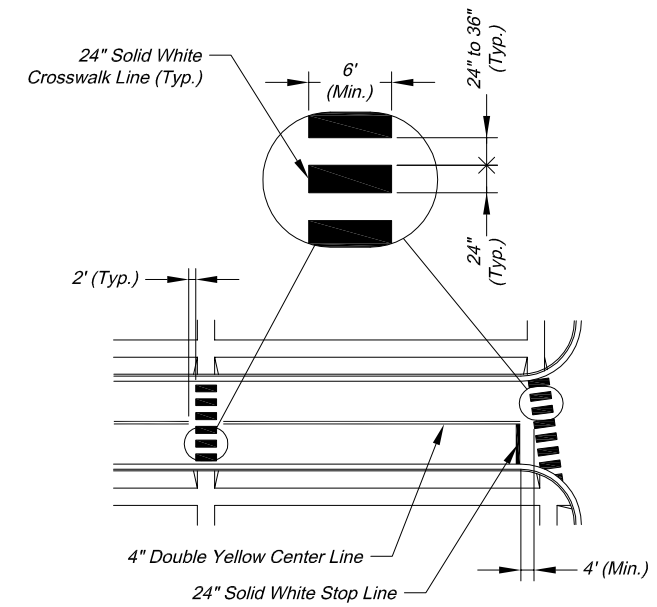

TYPICAL MIDBLOCK OR SCHOOL CROSS WALK

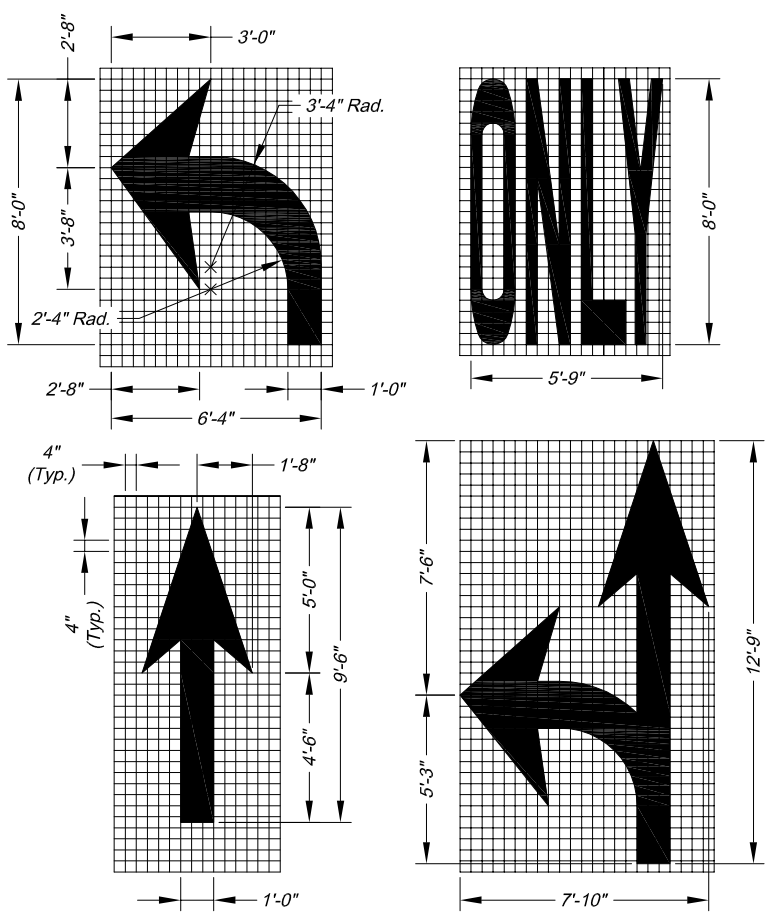

ARROW AND SYMBOL DETAILS

NOTES:
1. All arrow and symbol markings shall be white, and shall be centered in their respective traffic lanes.
2. Right-turn and combination right-turn/straight arrows are reverse of arrows shown.

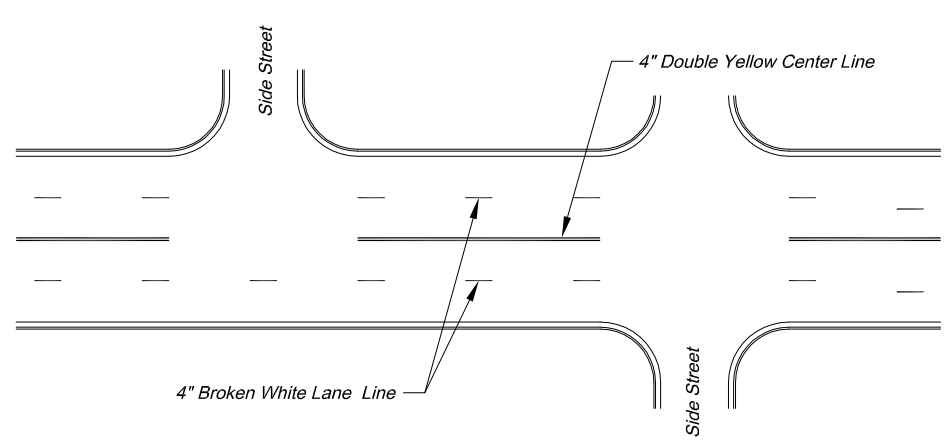

TYPICAL MARKINGS FOR FOUR-LANE UNDIVIDED ROADWAY

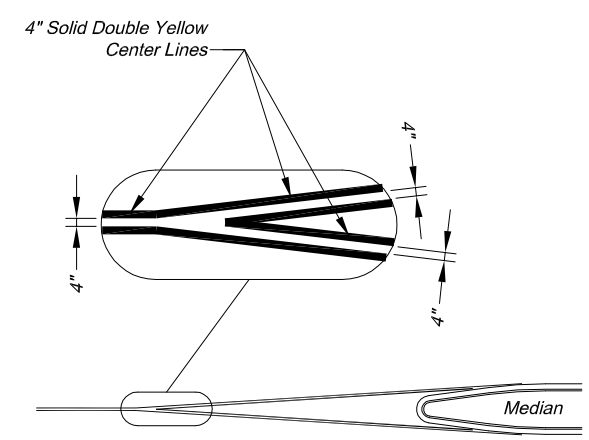

TYPICAL MEDIAN NOSE CENTER LINE DETAIL

PAVEMENT MARKING GENERAL NOTES:
1. All pavement markings shall be in accordance with the latest edition of the Manual on Uniform Traffic Control Devices (MUTCD).
2. All words and symbols shall conform to the latest edition of Standard Alphabets for Highway Signs and Pavement Markings printed by the U.S. Department of Transportation, Federal Highway Administration.
3. Pavement markings, either temporary or permanent are required at all times if the roadway is open to traffic.
4. All pavement markings that conflict with the desired markings shall be completely removed. Removals shall not leave the road surface scarred with an image that misleads traffic. Any excess damage or scarring of pavement shall be repaired at the Contractor's expense.
5. The proposed permanent markings shall be laid out by the Contractor in advance of the marking installation. Markings shall not be applied until the layout has been approved by the City Traffic Engineer.
6. Center lines shall be marked on all undivided arterial streets, and any other undivided street with more than two lanes and/or a speed limit of 30 mph or more.
7. Edge lines shall be marked on all non-curbed streets.

CITY OF LEE'S SUMMIT
PUBLIC WORKS DEPARTMENT
ENGINEERING DIVISION
220 SE GREEN STREET
LEE'S SUMMIT, MISSOURI 64063
PHONE: (816) 969-1800 FAX: (816) 969-1809

Project:

ROADWAY MARKING DETAILS

Sheet Name: STANDARD DRAWING PM-1

Drawn By: AS
Checked By: JW
Date: 09/09/2009
Project#

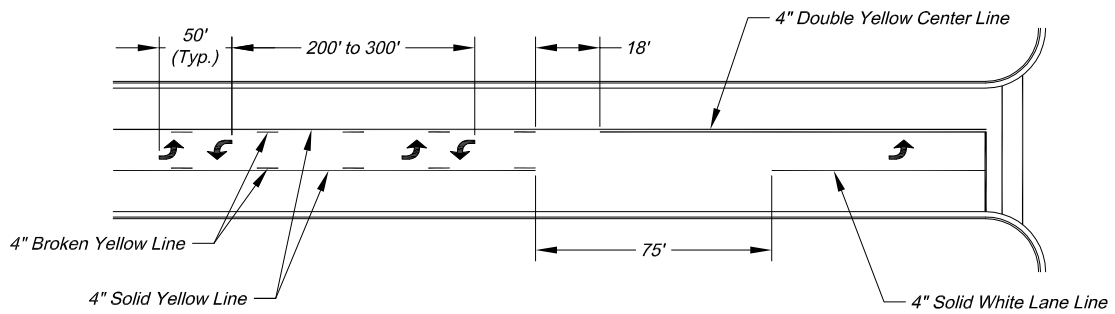

TYPICAL MARKINGS FOR TWO-WAY LEFT-TURN LANE

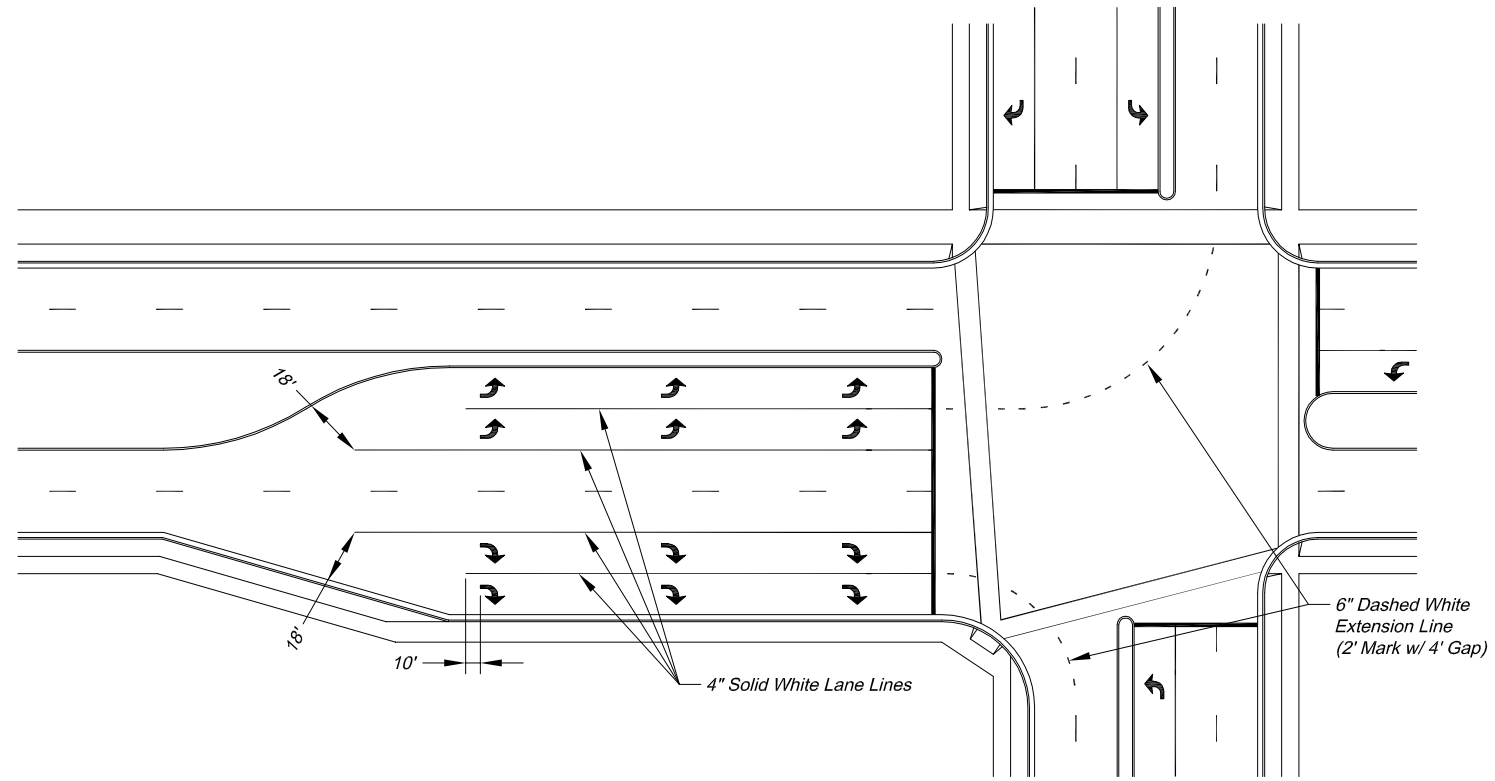

TYPICAL DUAL TURN LANE MARKINGS

NOTE:
1. Dashed extension lines shall not extend through crosswalks.

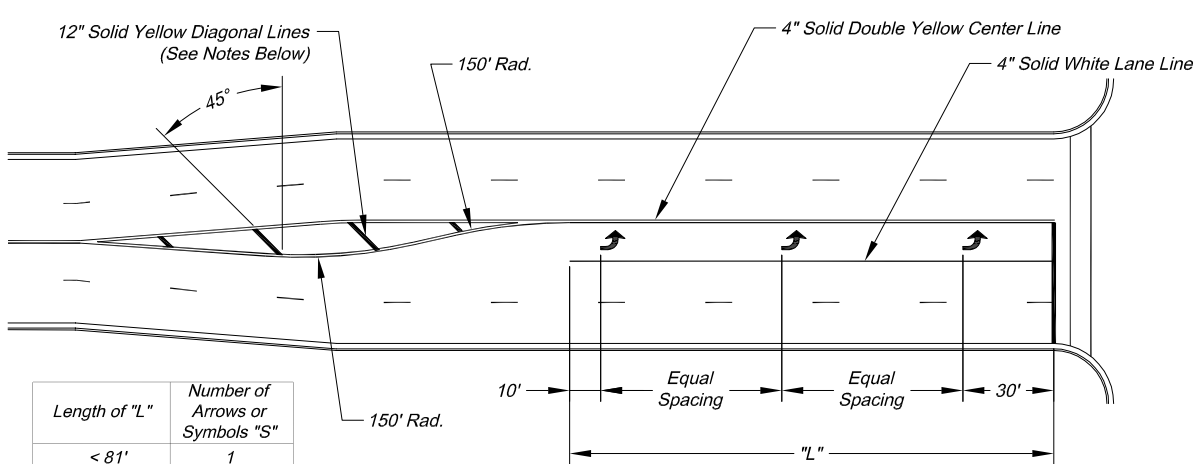

Length of "L"	Number of Arrows or Symbols "S"
< 81'	1
81' - 120'	2
121' - 200'	3
201' - 280'	4
281' - 360'	5
361' - 440'	6

TYPICAL TURN LANE MARKINGS

NOTES:
1. Diagonal lines are required between centerlines if the width of the area between the center lines is greater than 12' and/or the length of the area between center lines is greater than 250'.
2. Diagonal lines should be spaced at 5' increments, equal to the posted speed limit.
3. Equal Spacing is calculated as (L - 40) / (S - 1).
4. When a through lane of traffic terminates as a mandatory turn lane, Arrow and "ONLY" symbols should be marked in the turn lane, in alternating order. The first and last symbols should be Arrows.

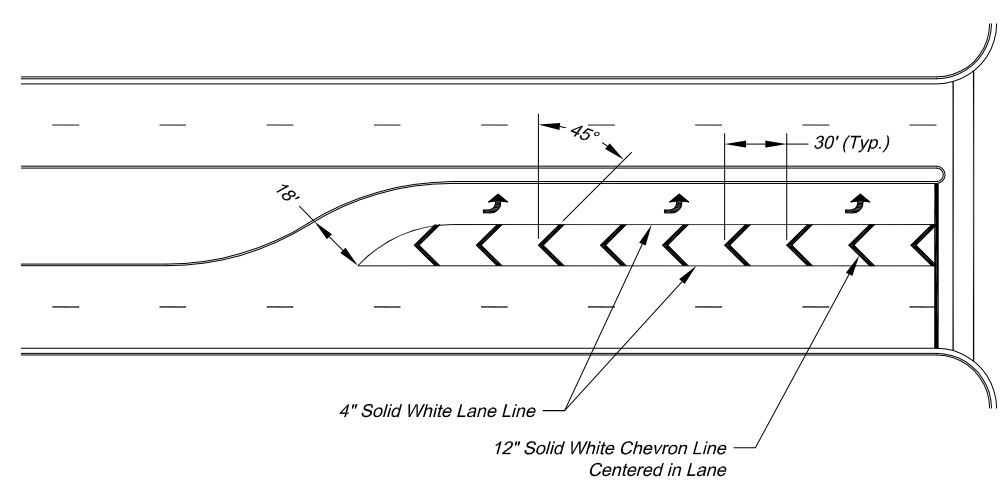

TYPICAL STRIPED OUT TURN LANE MARKINGS

CITY OF LEE'S SUMMIT
PUBLIC WORKS DEPARTMENT
ENGINEERING DIVISION
220 SE GREEN STREET
LEE'S SUMMIT, MISSOURI 64063
PHONE: (816) 969-1800 FAX: (816) 969-1809

Project:

INTERSECTION MARKING DETAILS

Sheet Name: STANDARD DRAWING PM-2

Drawn By: AS
Checked By: JW
Date: 09/09/2009
Project#

REQUIRED CONCRETE BEARING AREA (SQUARE FEET – SF)

NOM. DIA. (INCHES)	180 TEE, PLUG	90 BEND	45 BEND	22.5 BEND	11.25 BEND
6	4.7	6.7	4.0	4.0	4.0
8	8.4	11.8	6.4	4.0	4.0
10	13.1	18.5	10.0	5.1	4.0
12	18.8	26.7	14.4	7.4	4.0
14	25.7	36.3	19.6	10.0	5.0
16	33.5	47.4	25.6	13.1	6.6
18	42.4	REST. JT.	32.5	16.5	8.3
20	REST. JT.	REST. JT.	40.1	20.4	10.3
24	REST. JT.	REST. JT.	REST. JT.	29.4	14.8

NOTES:

1. ALL BENDS WITHOUT RESTRAINED JOINTS SHALL HAVE CONCRETE THRUST BLOCKS INSTALLED FOR RESTRAINT.
2. MEGA LUGS MAY BE USED ONLY IN CONJUNCTION WITH CONCRETE THRUST BLOCKING.
3. BEARING AREA MUST BE AGAINST UNDISTURBED SOIL.
4. DO NOT COVER JOINTS OR BOLTS (WHERE APPLICABLE) WITH CONCRETE.

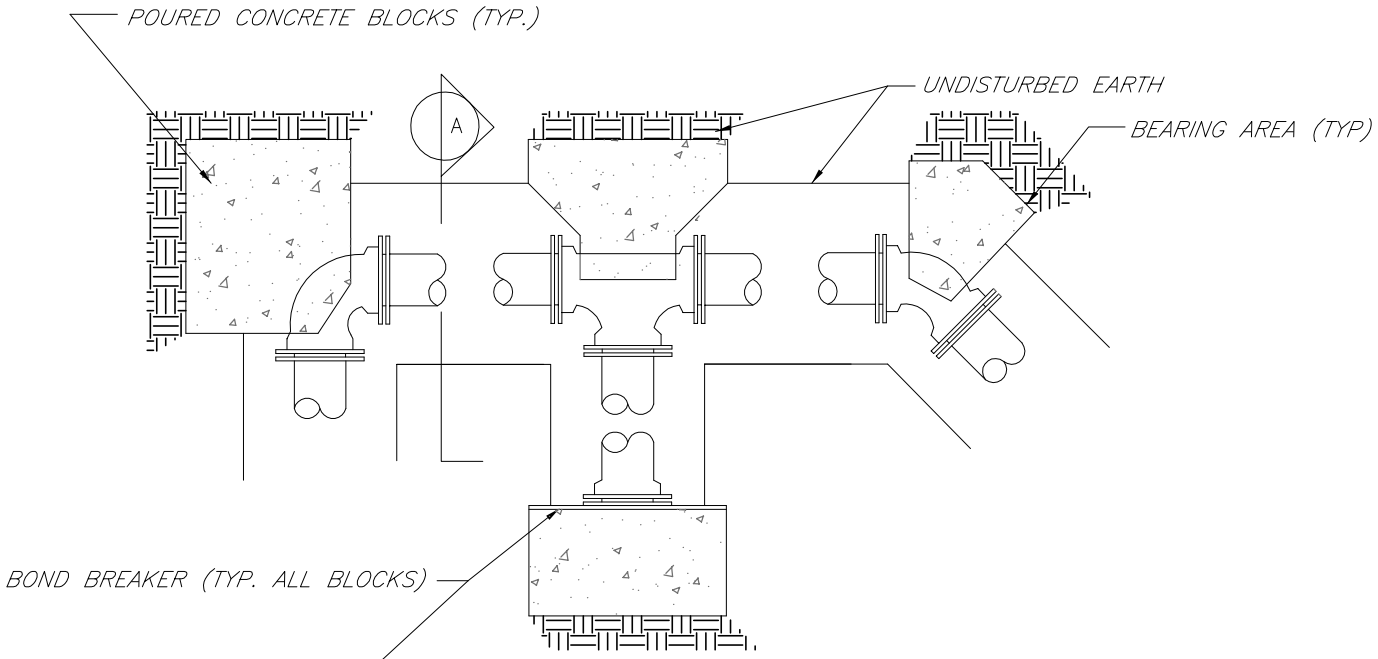

PLAN

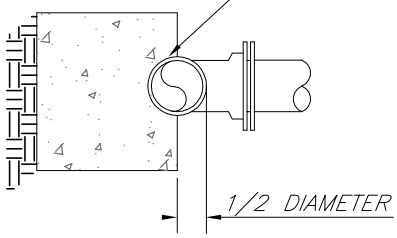

SECTION A

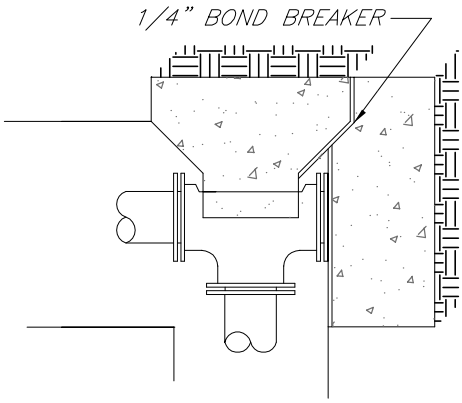

LEE'S SUMMIT
MISSOURI
PUBLIC WORKS ENGINEERING DIVISION | 220 SE GREEN STREET | LEE'S SUMMIT, MO 64063

HORIZONTAL THRUST BLOCKS

Date: 02/13
Drawn By: JN
Checked By: DL
FILE: WAT–1
Rev: 1/14
Rev:

REQUIRED CONCRETE VOLUME (CUBIC FEET – CF)

NOM. DIA. (INCHES)	180 TEE, PLUG	90 BEND	45 BEND	22.5 BEND	11.25 BEND
6	50.5	71.4	38.6	19.7	9.9
8	89.8	126.9	68.7	35.0	17.6
10	140.2	198.3	107.3	54.7	27.5
12	202.0	REST. JT.	154.6	78.8	39.6
14	REST. JT.	REST. JT.	210.4	107.3	53.9
16	REST. JT.	REST. JT.	REST. JT.	140.1	70.4
18	REST. JT.	REST. JT.	REST. JT.	177.3	89.1
20	REST. JT.	REST. JT.	REST. JT.	REST. JT.	110.0
24	REST. JT.	REST. JT.	REST. JT.	REST. JT.	158.4

NOTES:

1. ALL BENDS WITHOUT RESTRAINED JOINTS SHALL HAVE CONCRETE THRUST BLOCKS INSTALLED FOR RESTRAINT.
2. MEGA LUGS MAY BE USED ONLY IN CONJUNCTION WITH CONCRETE THRUST BLOCKING.
3. BEARING MUST BE AGAINST UNDISTURBED SOIL.
4. DO NOT COVER JOINTS OR BOLTS (WHERE APPLICABLE) WITH CONCRETE.

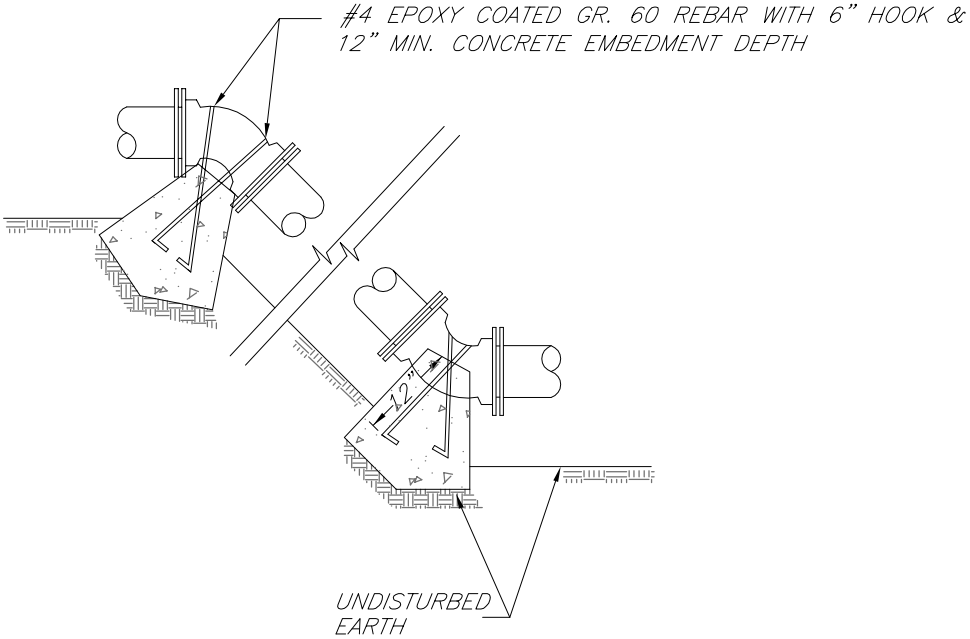

LEE'S SUMMIT
MISSOURI
PUBLIC WORKS ENGINEERING DIVISION | 220 SE GREEN STREET | LEE'S SUMMIT, MO 64063

VERTICAL THRUST BLOCKS

Date: 02/13
Drawn By: JN
Checked By: DL
FILE: WAT–2
Rev: 1/14
Rev:

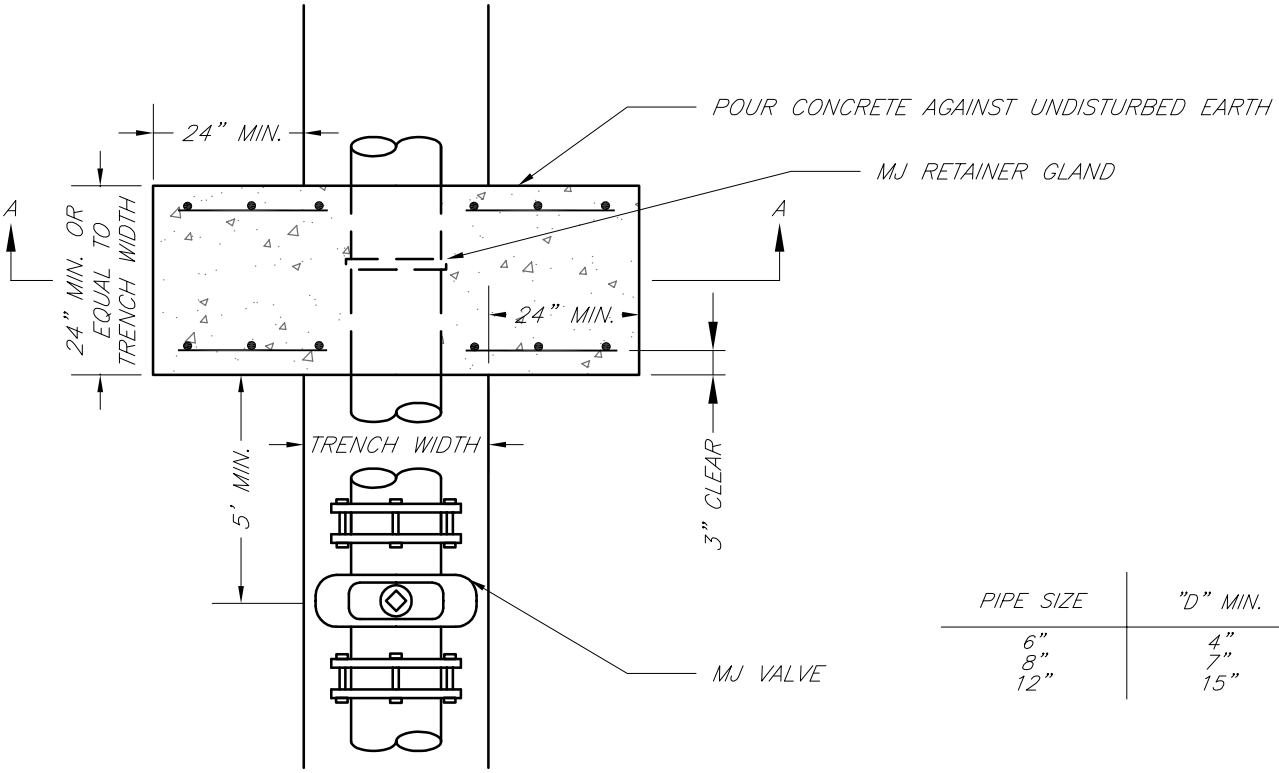

PIPE SIZE	"D" MIN.
6"	4"
8"	7"
12"	15"

TOP VIEW

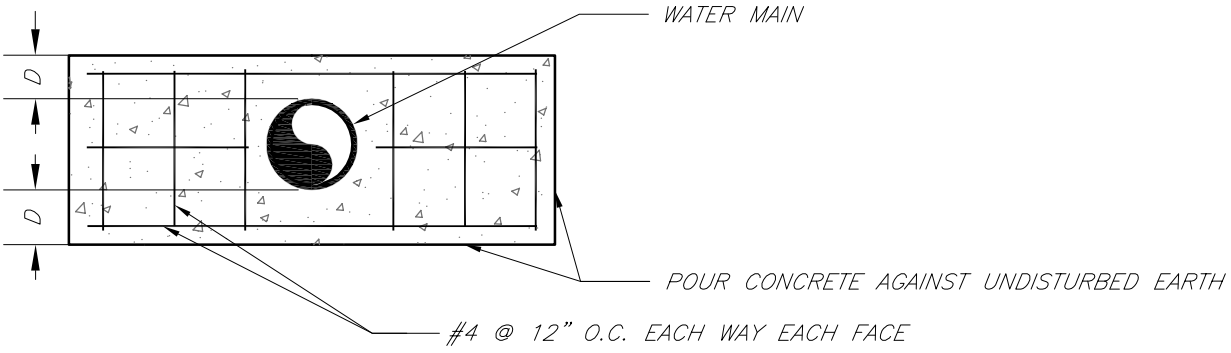

SECTION A

NOTE:

THIS DETAIL NOT TO BE USED FOR PIPE GREATER THAN 12"

LEE'S SUMMIT
MISSOURI
PUBLIC WORKS ENGINEERING DIVISION | 220 SE GREEN STREET | LEE'S SUMMIT, MO 64063

STRADDLE BLOCK

Date:	02/13
Drawn By:	JN
Checked By:	DL
FILE:	WAT-3
Rev:	1/14
Rev:	

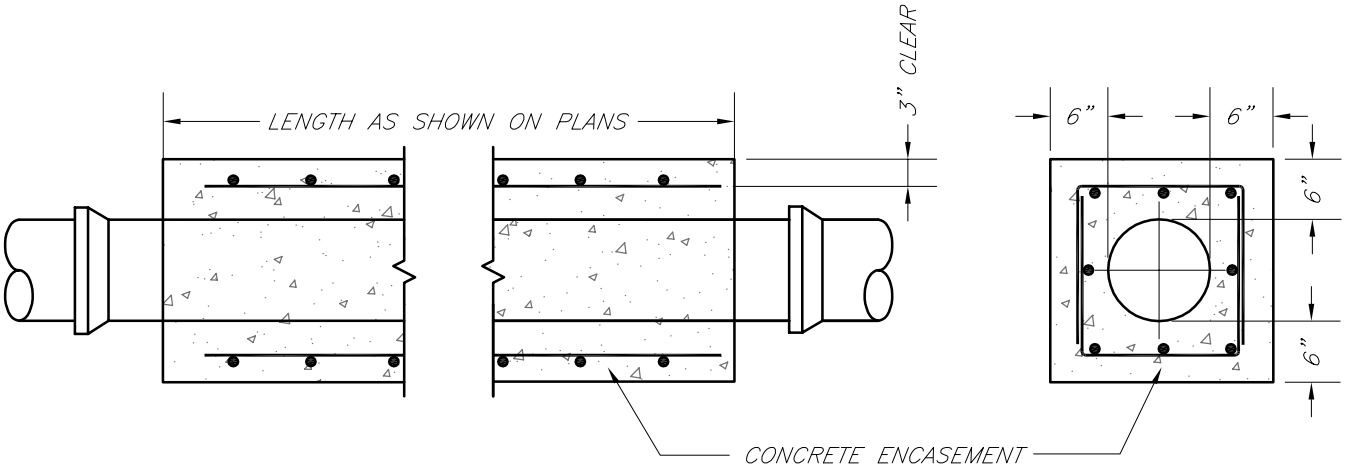

NOTES:

1. INTERMEDIATE BELLS SHALL BE ENCASED.
2. REINFORCING STEEL SHALL BE #4 @ 12" O.C. EACH WAY WITH A MINIMUM REBAR LAP OF 12".
3. THIS DETAIL IS FOR PIPES 12" AND SMALLER.

LS	LEE'S SUMMIT MISSOURI PUBLIC WORKS ENGINEERING DIVISION | 220 SE GREEN STREET | LEE'S SUMMIT, MO 64063	Date: 02/13
		Drawn By: JN
		Checked By: DL
		FILE: WAT-4
	WATER PIPE ENCASEMENT	Rev: 1/14
		Rev:

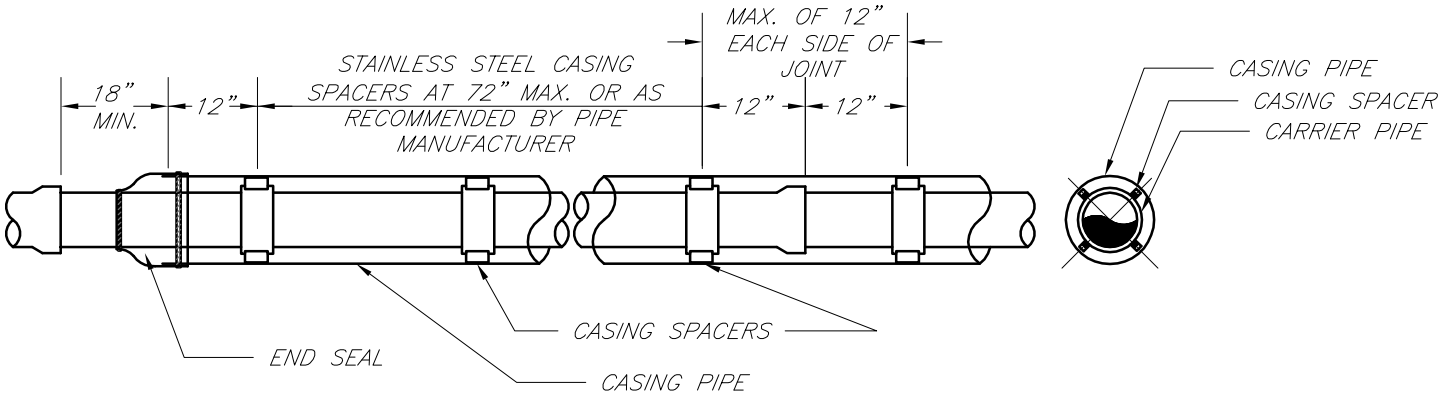

NOT TO SCALE

NOTES:

1. REFER TO SPECIFICATION SECTION 3900 FOR ADDITIONAL INFORMATION.
2. LENGTH, DIAMETER, AND WALL THICKNESS TO BE SHOWN ON CONSTRUCTION PLANS.

LS	LEE'S SUMMIT MISSOURI PUBLIC WORKS ENGINEERING DIVISION | 220 SE GREEN STREET | LEE'S SUMMIT, MO 64063	Date: 02/13 Drawn By: JN Checked By: DL FILE: WAT–5
	WATER CASING PIPE DETAIL	Rev: 1/14 Rev:

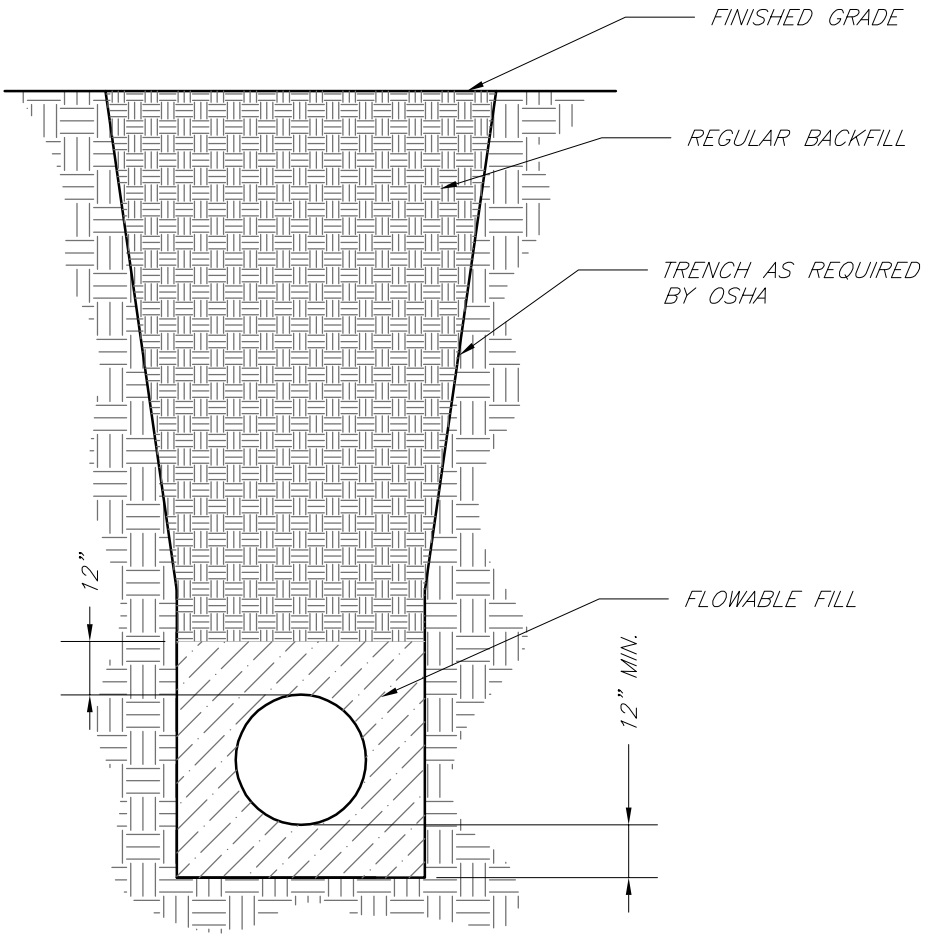

NOT TO SCALE

NOTES:

1. FLOWABLE FILL SHALL MEET THE REQUIREMENTS OF THE CITY OF LEE'S SUMMIT DESIGN AND CONSTRUCTION MANUAL.
2. REGULAR BACKFILL ABOVE THE TRENCH CHECK SHALL BE FREE OF DEBRIS, ORGANIC MATTER, AND STONES > 6" IN ANY DIMENSION.
3. TOP OF FLOWABLE BACKFILL SHALL EXTEND 12" ABOVE THE TOP OF THE PIPE.
4. LENGTH OF TRENCH CHECK SHALL BE A MINIMUM OF 12".

LS	LEE'S SUMMIT MISSOURI PUBLIC WORKS ENGINEERING DIVISION | 220 SE GREEN STREET | LEE'S SUMMIT, MO 64063	Date: 02/13
		Drawn By: JN
		Checked By: DL
		FILE: WAT–6
	TRENCH CHECK	Rev: 1/14
		Rev:

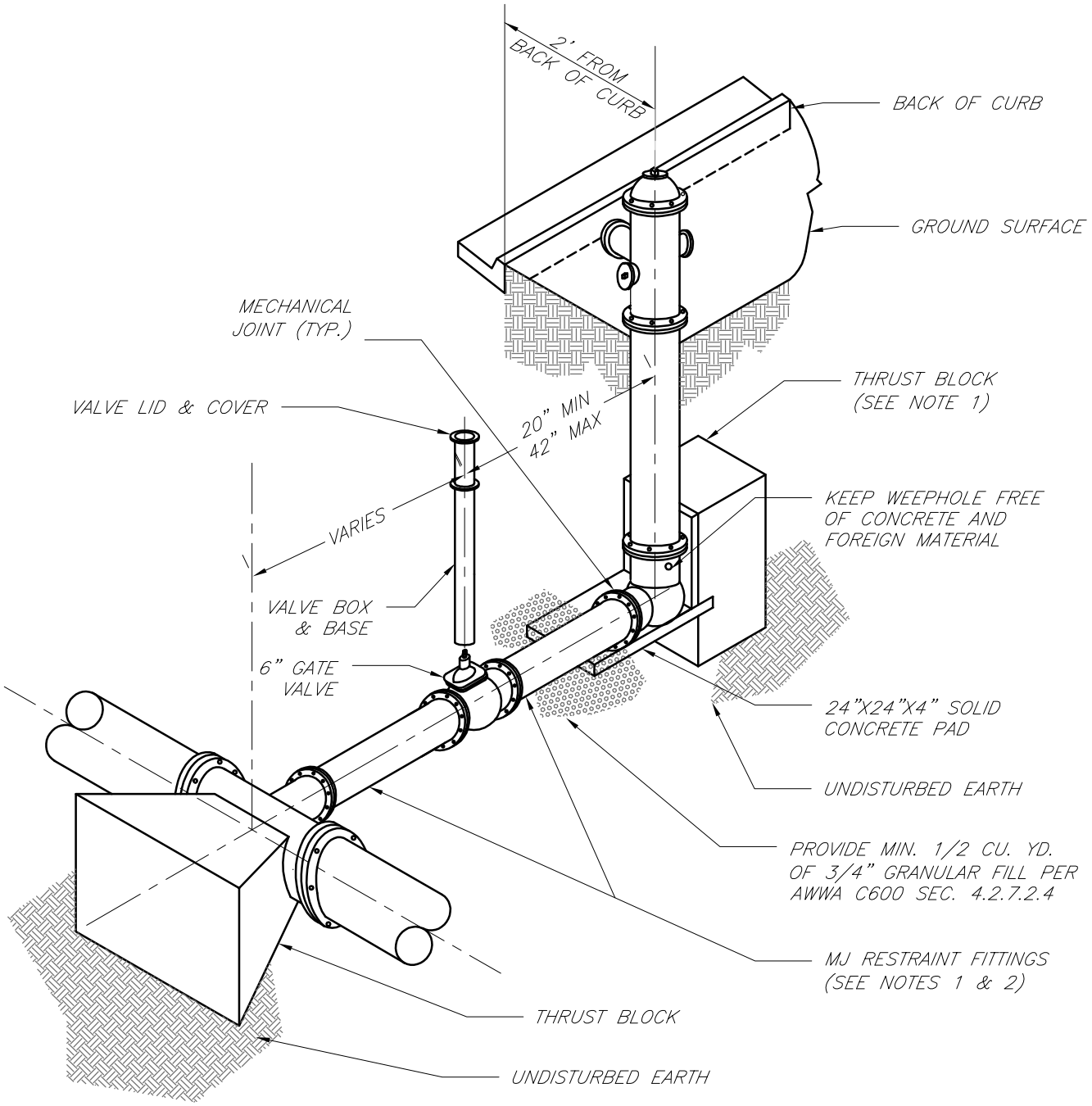

NOTES:

1. WHEN RETAINER GLANDS ARE USED IN LIEU OF MECHANICAL JOINT (MJ) RESTRAINT FITTINGS, HORIZONTAL THRUST BLOCKS ARE REQUIRED.
2. GATE VALVE MAY BE BOLTED DIRECTLY TO MJ RESTRAINT TEE.
3. SEE APPROVED PRODUCTS LIST FOR WATER UTILITIES FOR FIRE HYDRANT, VALVES, VALVE BOX LID, AND COVER.
4. BOTTOM HYDRANT FLANGE SHALL BE 2" TO 6" ABOVE FINISHED GRADE.
5. FOR STREETS WITHOUT CURBS FIRE HYDRANTS SHALL BE PLACED WITHIN 1 FOOT OF THE R/W LINE, BUT NOT MORE THAN 10' FROM EDGE OF PAVEMENT. FIRE HYDRANT SHALL NOT BE PLACED IN BOTTOM OF DITCH.
6. HYDRANT SHALL BE ROTATED AS DIRECTED BY INSPECTOR.

LS	LEE'S SUMMIT MISSOURI PUBLIC WORKS ENGINEERING DIVISION | 220 SE GREEN STREET | LEE'S SUMMIT, MO 64063	Date: 02/13
		Drawn By: JN
		Checked By: DL
		FILE: WAT–7
	HYDRANT INSTALLATION – STRAIGHT SET	Rev: 1/14
		Rev:

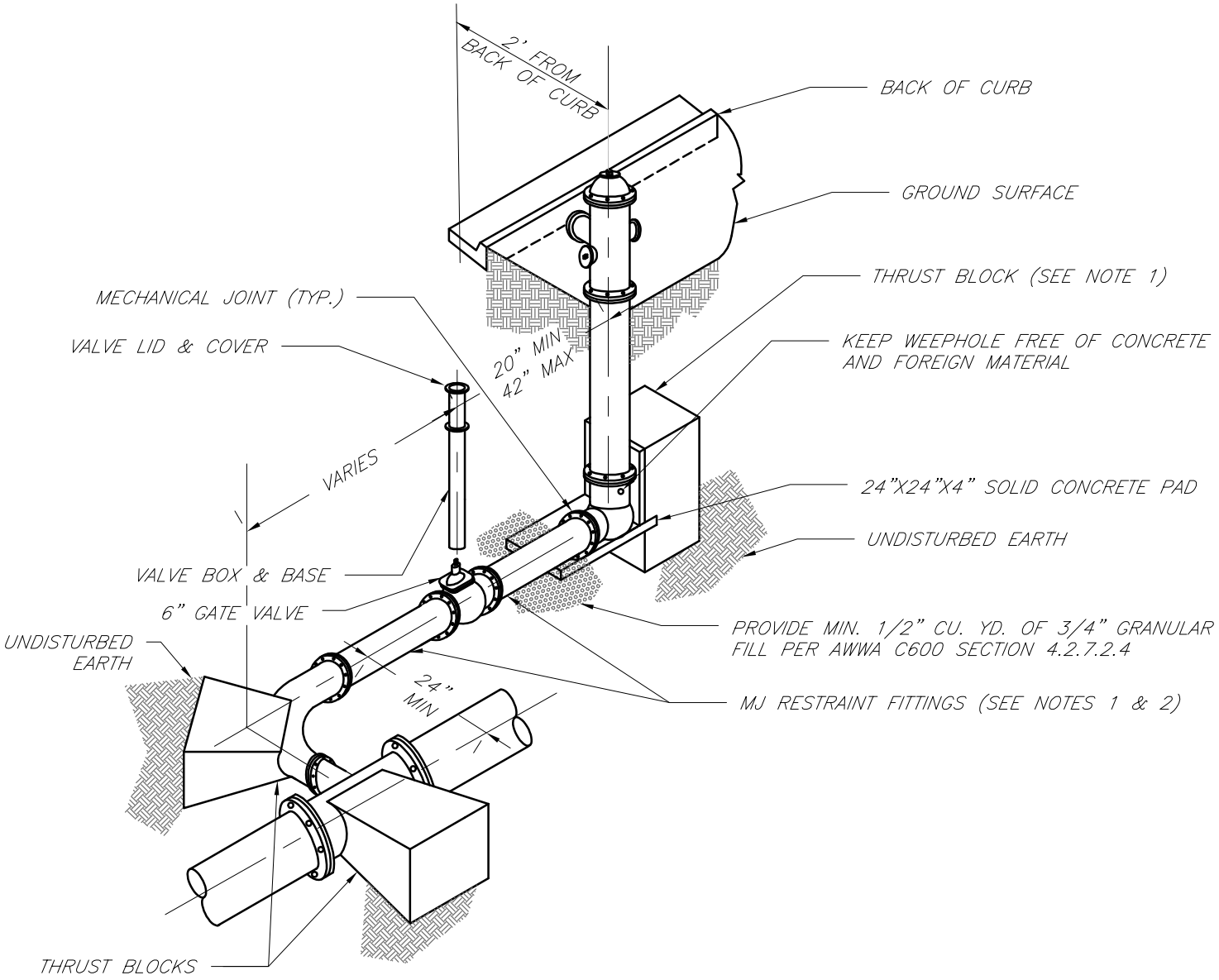

NOTES:

1. WHEN RETAINER GLANDS ARE USED IN LIEU OF MECHANICAL JOINT (MJ) RESTRAINT FITTINGS, HORIZONTAL THRUST BLOCKS ARE REQUIRED.
2. GATE VALVE MAY BE BOLTED DIRECTLY TO MJ RESTRAINT TEE.
3. SEE APPROVED PRODUCTS LIST FOR WATER UTILITIES FOR FIRE HYDRANT, VALVES, VALVE BOX LID, AND COVER.
4. BOTTOM HYDRANT FLANGE SHALL BE 2" TO 6" ABOVE FINISHED GRADE.
5. FOR STREETS WITHOUT CURBS FIRE HYDRANTS SHALL BE PLACED WITHIN 1 FOOT OF THE R/W LINE, BUT NOT MORE THAN 10' FROM EDGE OF PAVEMENT. FIRE HYDRANT SHALL NOT BE PLACED IN BOTTOM OF DITCH.
6. HYDRANT SHALL BE ROTATED AS DIRECTED BY INSPECTOR.

LS	LEE'S SUMMIT MISSOURI PUBLIC WORKS ENGINEERING DIVISION | 220 SE GREEN STREET | LEE'S SUMMIT, MO 64063	Date: 02/13 Drawn By: JN Checked By: DL FILE: WAT-8
	HYDRANT WITH 90 DEGREE BEND	Rev: 1/14 Rev:

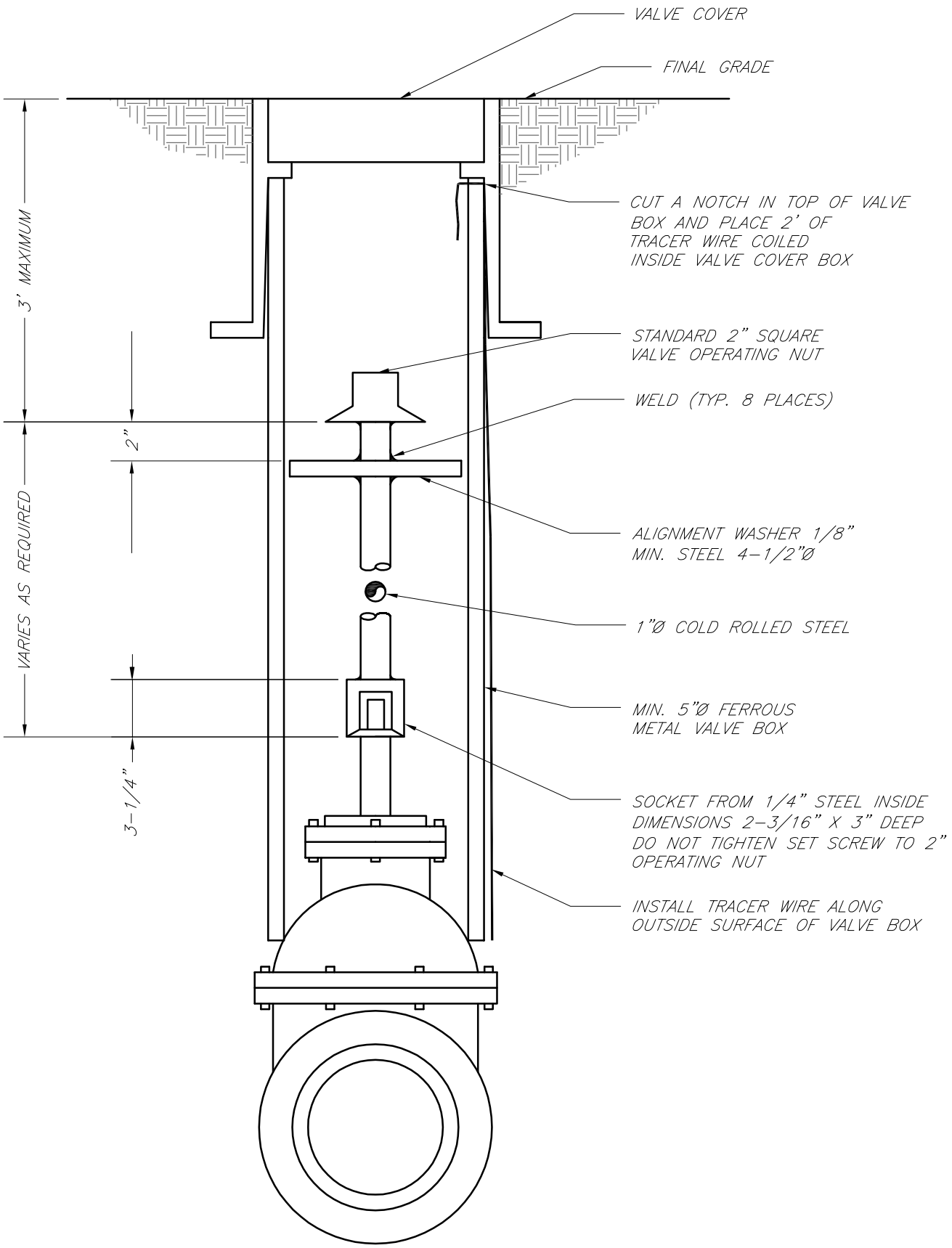

LEE'S SUMMIT
MISSOURI
PUBLIC WORKS ENGINEERING DIVISION | 220 SE GREEN STREET | LEE'S SUMMIT, MO 64063

VALVE STEM EXTENSION AND VALVE BOX

Date:	02/13
Drawn By:	JN
Checked By:	DL
FILE:	WAT-9
Rev:	1/14
Rev:	

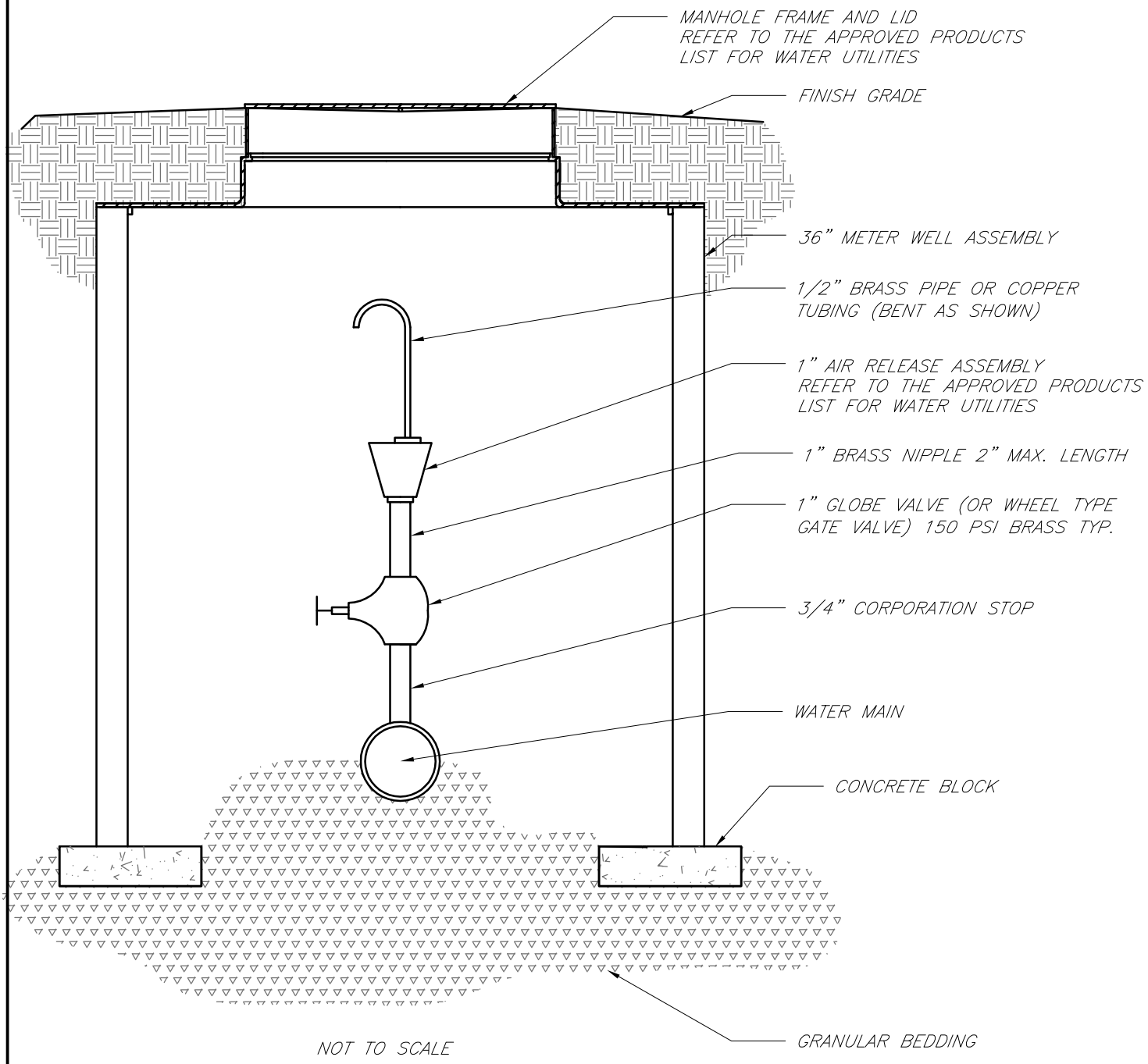

NOT TO SCALE

LEE'S SUMMIT
MISSOURI
PUBLIC WORKS ENGINEERING DIVISION | 220 SE GREEN STREET | LEE'S SUMMIT, MO 64063

AIR RELEASE ASSEMBLY

Date:	02/13
Drawn By:	JN
Checked By:	DL
FILE:	WAT-10
Rev:	1/14
Rev:	

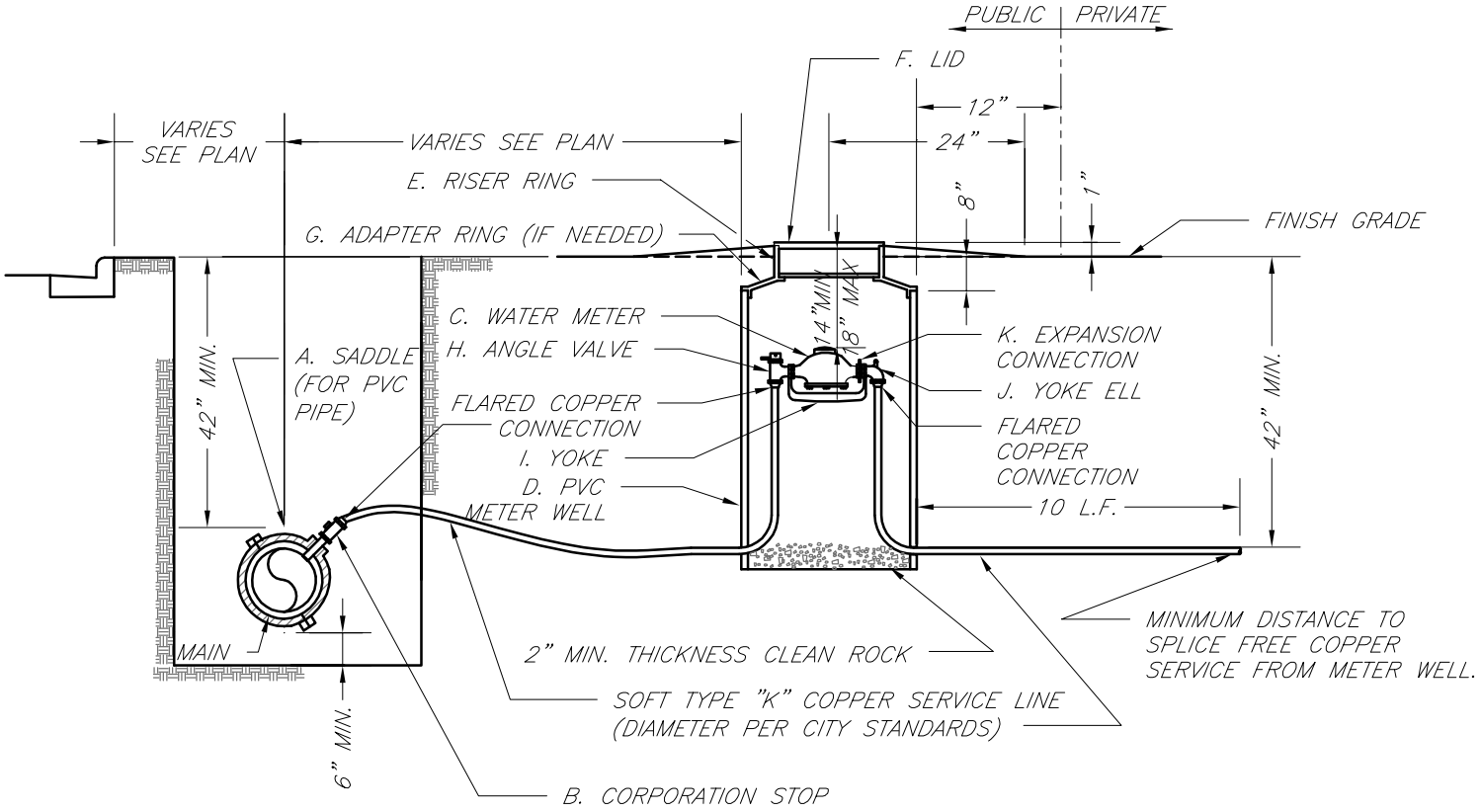

TYPICAL METER INSTALLATION – 2" AND SMALLER
NOT TO SCALE

NOTES:

1. METER INSTALLATION SHALL NOT BE LOCATED IN AREAS SUBJECT TO VEHICULAR TRAFFIC OR IN CONCRETE PAVEMENT WITHOUT CITY APPROVAL.
2. IF METER IS TO BE LOCATED OTHER THAN IN FRONT OF PROPERTY LINE, CITY APPROVAL SHALL BE OBTAINED.
3. CITY TO FURNISH ITEMS A–K.
4. NO OTHER EQUIPMENT SHALL BE INSTALLED IN THIS PIT.
5. 42" MINIMUM BURY DEPTH FOR ALL SERVICE LINES.
6. EXCAVATION FOR TAP TO EXPOSE 4 LINEAR FEET OF MAIN.
7. NO SPLICES ALLOWED BETWEEN METER AND MAIN.
8. SERVICE CONNECTION TAP AT APPROXIMATELY 45 DEGREES.
9. LID AND RISER RING SHALL BE SET SO THAT GROUND WATER WILL DRAIN AWAY FROM THE WELL.
10. CONTACT WATER UTILITIES, 816–969–1900, FOR REQUIREMENTS OF A METER LARGER THAN 2"

LS	LEE'S SUMMIT MISSOURI PUBLIC WORKS ENGINEERING DIVISION | 220 SE GREEN STREET | LEE'S SUMMIT, MO 64063	Date: 02/13
		Drawn By: JN
		Checked By: DL
		FILE: WAT–11
	SERVICE CONNECTION/METER WELL	Rev: 1/14
		Rev:

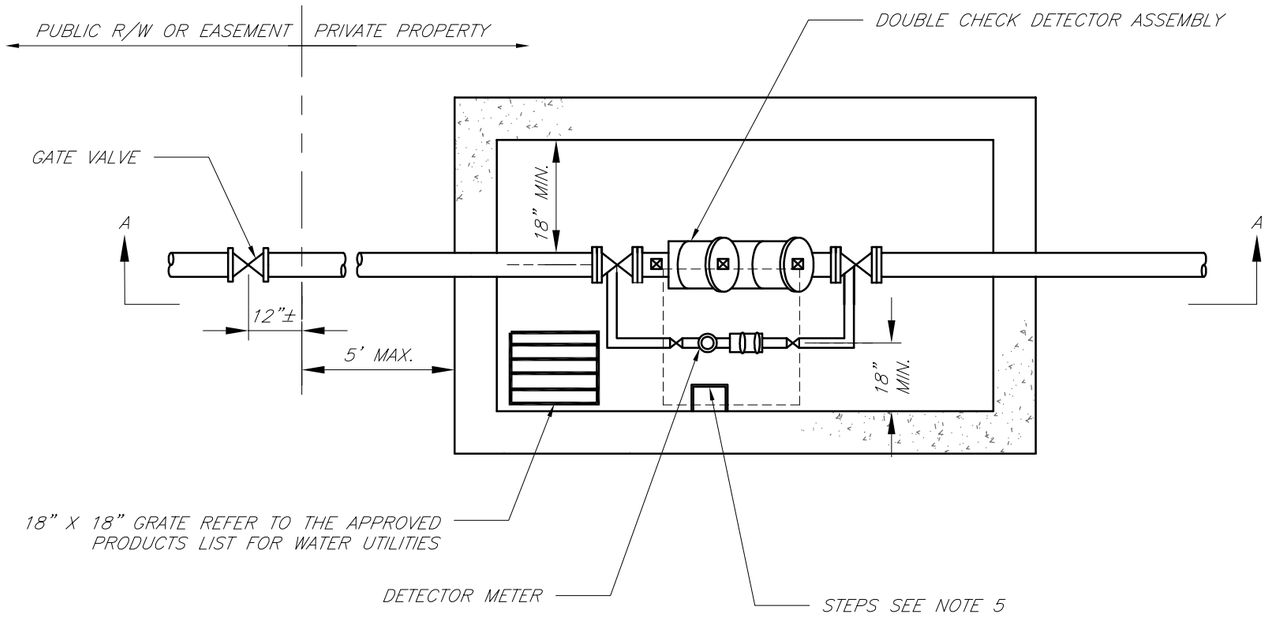

PLAN VIEW
NOT TO SCALE

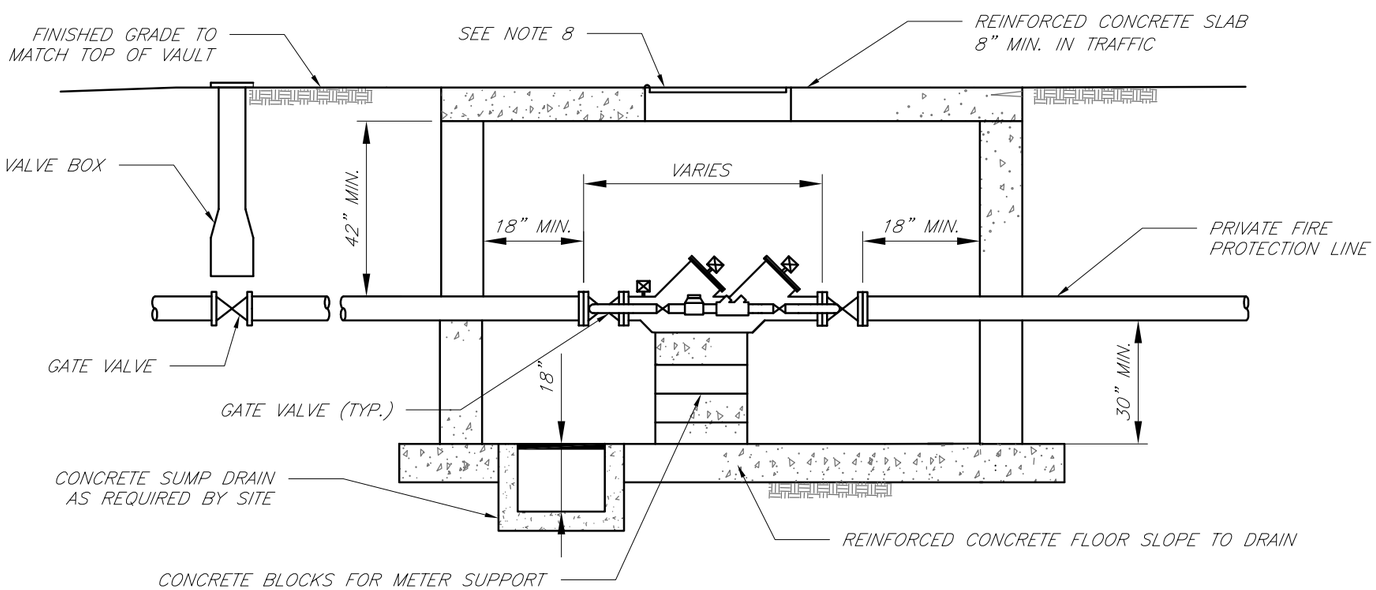

SECTION A–A
NOT TO SCALE

GENERAL NOTES:

1. METER VAULT WALLS TO BE POURED OR PRECAST CONCRETE. METER VAULT ROOF TO BE REINFORCED CONCRETE WITH OPENING CENTERED OVER DETECTOR METER. REINFORCED WALLS AND SLABS ARE TO BE DESIGNED BY THE OWNER'S ENGINEER OR PRECAST ENGINEER.
2. METER VAULT TO BE LOCATED, WHEN POSSIBLE, OUTSIDE TRAFFIC AREA AND WHERE SURFACE WATER WILL NOT DRAIN INTO IT. PROVIDE CONCRETE SUMP TO DRAIN TO AN ABOVE GROUND DISCHARGE POINT.
3. ALL PIPE AND FITTINGS FROM THE CITY WATER MAIN THROUGH THE VAULT SHALL BE PROVIDED WITH RESTRAINED JOINT FITTINGS.
4. ALL FITTINGS FOR THE DETECTOR METER TO BE BRASS.
5. STEPS SHALL BE IN ACCORDANCE WITH THE APPROVED PRODUCTS LIST FOR WATER UTILITIES AND SHALL BE ON 16" CENTERS.
6. A DEPARTMENT OF NATURAL RESOURCES APPROVED DOUBLE CHECK DETECTOR ASSEMBLY BACKFLOW PREVENTER MUST BE USED. FOR A COPY OF THE MISSOURI DEPARTMENT OF NATURAL RESOURCES APPROVED BACKFLOW PREVENTION ASSEMBLIES, CONTACT WATER UTILITIES AT 816–969–1900.
7. ALL VALVES SHALL HAVE RISING STEMS.
8. MANHOLE COVER SHALL BE A BILCO K–1 MODEL UNLESS IN A VEHICLE TRAFFIC AREA. SEE THE APPROVED PRODUCTS LIST FOR WATER UTILITIES FOR TRAFFIC CONDITIONS. THE COVER SHALL HAVE A 1–3/4" ø HOLE DRILLED FOR A TOUCH/READ DEVICE.
9. A MINIMUM OF 18" CLEARANCE SHALL BE PROVIDED AROUND ALL PIPING, VALVES, APPURTENANCES, ETC.
10. CONTACT PUBLIC WORKS ENGINEERING FOR VAULTS THAT INCLUDE A FIRE DEPARTMENT CONNECTION OR A 3" OR LARGER METER.

CITY OF LEE'S SUMMIT, MO
PUBLIC WORKS DEPARTMENT
ENGINEERING DIVISION
220 SE GREEN STREET
LEE'S SUMMIT, MO 64063

Project: STANDARD DRAWINGS

Sheet Name: VAULT FOR DOUBLE CHECK DETECTOR CHECK

Drawn By: .AS
Checked By: .DL
Date: 1/14
Rev: 1/14

OF

WAT–12

SYMBOL LEGEND

- Work Area
- Channelizer
- Sign
- Arrow Panel
- Barricade
- Flagger
- Direction of Travel

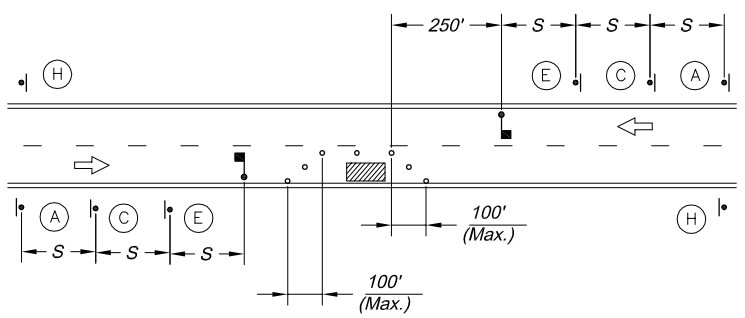

LANE CLOSURE - TWO LANE STREET

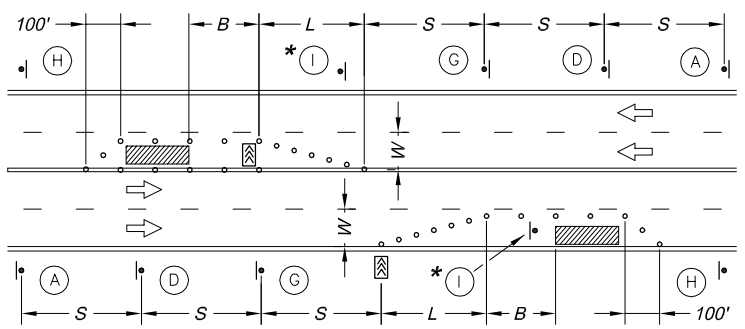

LANE CLOSURE - FOUR LANE STREET

* Install Signs Every 200 Feet Throughout the Closed Lane or As Needed

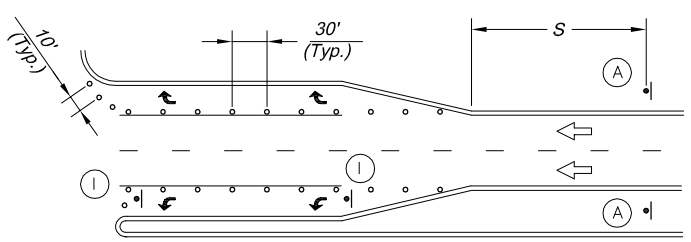

TURN LANE CLOSURE

Sign Spacing "S"	
Speed Limit (mph)	Spacing (Feet)
25	100
30 - 35	250
≥ 40	350

Taper Dimensions (Feet)				
Speed Limit (mph)	Minimum Taper Length "L", per Lane Width "W"			Minimum Number of Channelizers
	10	11	12	
25	105	115	125	6
30	150	165	180	7
35	205	225	245	8
40	270	295	320	9
45	450	495	540	13

Guidelines for Length of Longitudinal Buffer Space "B"	
Speed Limit (mph)	Length (Feet)
25	35
30	55
35	85
40	120
45	170

Maximum Channelizer Spacing		
Speed Limit (mph)	Within Taper (Feet)	Outside Taper (Feet)
25	25	50
30	30	60
35	35	70
40	40	80
45	45	90

SIGN LEGEND

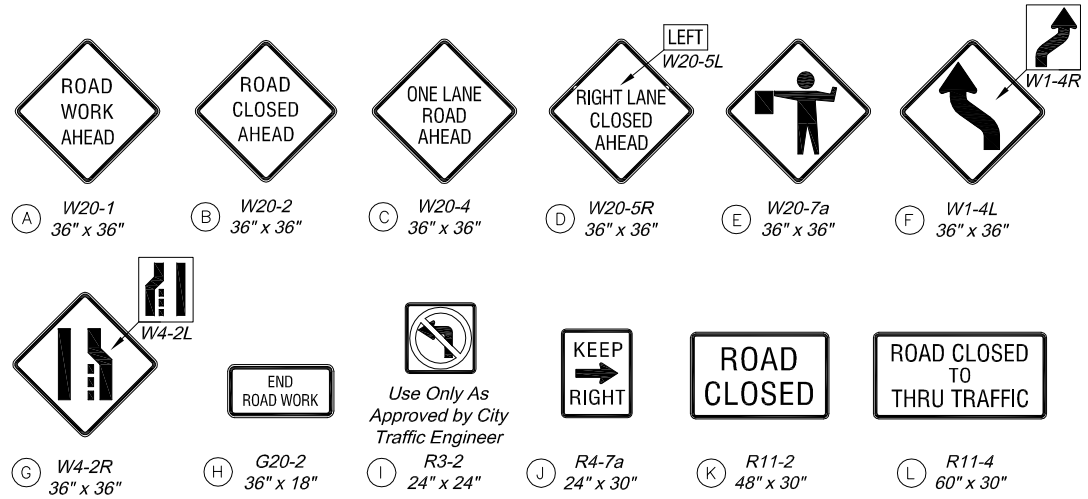

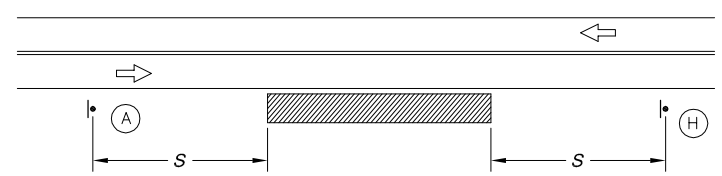

TYPICAL SIGNING FOR WORK ADJACENT TO THE STREET

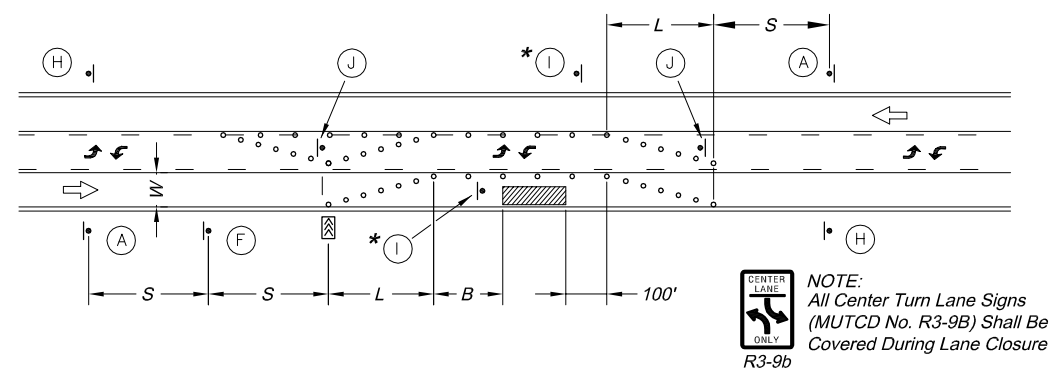

NOTE:
All Center Turn Lane Signs (MUTCD No. R3-9B) Shall Be Covered During Lane Closure

LANE CLOSURE - THREE LANE STREET

* Install Signs Every 200 Feet Throughout the Closed Lane or As Needed

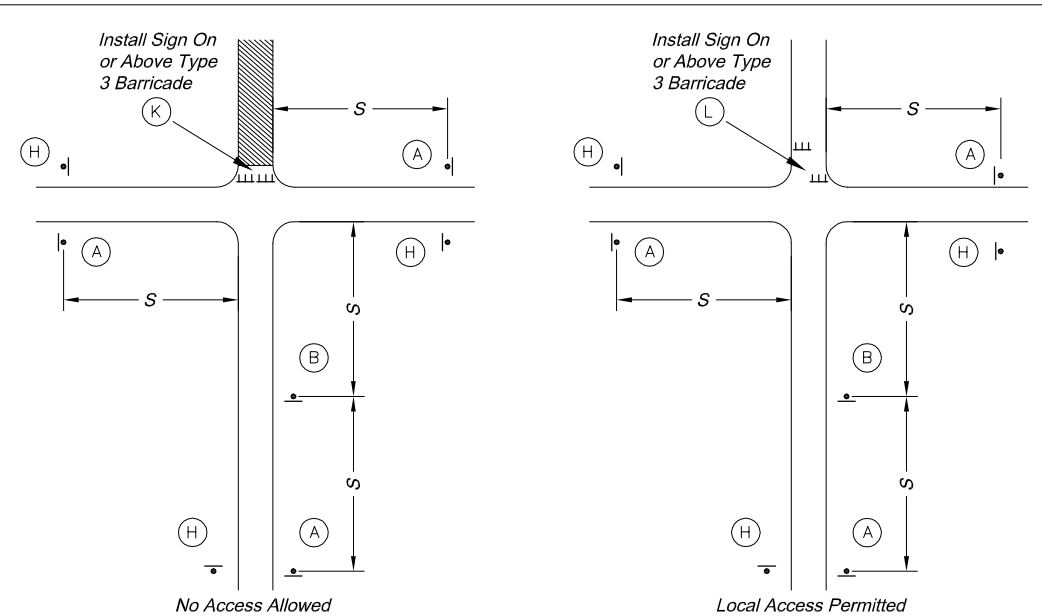

No Access Allowed

Local Access Permitted

TYPICAL STREET CLOSURE

GENERAL NOTES:

1. All signs, barricades, channelizers, markings and other traffic control devices shall conform to the latest edition of the Manual on Uniform Traffic Control Devices (MUTCD).
2. All traffic control devices shall be standard in size, shape, color, and message, in good condition, and retro-reflectorized. All signs shall be securely mounted with height and lateral location as described in the MUTCD.
3. Warning lights shall be used on barricades in place at night and on warning signs which alert drivers about a change in alignment, traffic control, lane closure, or road closure.
4. Flaggers shall be used where indicated on the plans, where construction vehicles interact with normal traffic, or where construction activities impose a restriction on traffic, as directed by the City Traffic Engineer. Where flaggers are used, advance signing shall be erected as shown in the details or as specified in the MUTCD. Flaggers shall meet the requirements in the MUTCD in regard to character, training, attire, and behavior.
5. Trim-lines are the City's preferred channelizing device. Cones may not be used at nighttime.
6. Traffic control devices not in use or not applicable shall be either covered or removed from the work area.
7. The Contractor shall use barricades, street plates, or fencing as needed to effectively shield pedestrian and vehicular traffic from exposed objects, excavations, and construction activities.
8. Access shall be maintained to all driveways and side streets unless noted otherwise on the plans.
9. No street shall be closed without the approval of the City Traffic Engineer. The Contractor shall notify the City Traffic Engineer at least 7 days in advance of any street closure. If a detour route around the closure is to be provided, all detour signing shall be as shown on a plan approved by the City Traffic Engineer.
10. Construction vehicles parked along streets shall be located within the work area (traffic control) or where otherwise normally permitted. Construction materials, including traffic control and vehicles shall not restrict sight distance for vehicles exiting at streets or drives.
11. Construction materials shall be kept off of sidewalks, consolidated in one location within City right-of-way, and removed daily unless otherwise approved by the Inspector. Dirt, mud, and other construction debris on streets and sidewalks shall be removed immediately.
12. The Contractor shall not perform any work that will restrict vehicular traffic in any way between the hours of 7:00 a.m. and 9:00 a.m. or 4:00 p.m. and 6:00 p.m. Monday through Friday unless otherwise indicated in the specifications.
13. All travel lanes should be at least 11 feet wide unless otherwise authorized by the City Traffic Engineer. A "Narrow Lanes" sign shall be installed in advance of a lane width reduction to less than 11 feet.
14. All edge drop-offs of more than 2 inches and less than 4 inches should be protected by a wedge or barrier and all edge drop-offs greater than 4 inches shall have edge protection (see Traffic Control Specifications for edge treatment requirements).
15. The "Workers" symbolic sign (MUTCD No. W21-1a) may be used instead of the "Road Work Ahead" sign for work with a duration of 12 hours or less. The "End Road Work" sign is not required to be installed after the "Workers" sign.
16. No traffic signal shall be altered or modified in any way without a plan approved by the City Traffic Engineer.
17. The Contractor shall be responsible for maintaining all traffic control devices on an around-the-clock basis, whether or not work is actively being pursued and any deficiencies noted shall be corrected immediately.
18. The traffic control requirements shown on these plans are minimum requirements only and do not attempt to address in depth the variety of situations that may occur once construction has started. In no way do the requirements shown on these plans relieve the Contractor of his responsibility for selecting the proper traffic control devices and implementation procedures that will assure the safety of drivers, pedestrians, and workers at all times.
19. Should the contractor fail to enforce the traffic control plan or fail to clean, replace or otherwise maintain the traffic control devices when directed to do so by the City Traffic Engineer or representative, the City may take one or more of the following actions:
    - A) Employ another agency to correct deficiencies in traffic control devices and deduct the cost from the Contractor's pay estimate,
    - B) Stop the work until deficiencies are corrected,
    - C) Suspend all pay estimates until deficiencies are corrected, or
    - D) Place the Contractor in default.

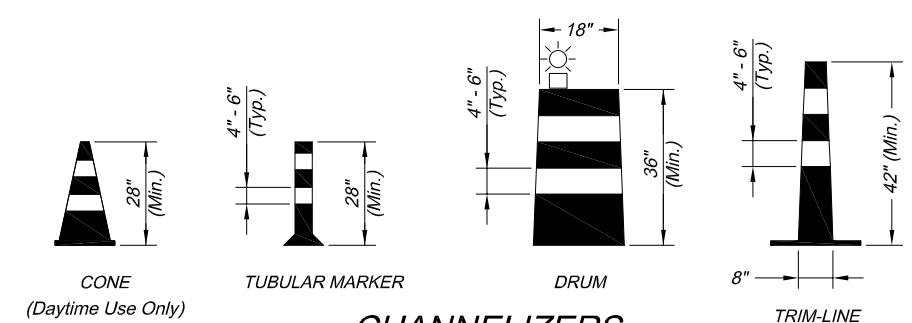

CONE (Daytime Use Only) | TUBULAR MARKER | DRUM | TRIM-LINE

CHANNELIZERS

NOTE: White Bands On Barricades and Channelizers Shall Be Made From High Intensity Sheeting Material.

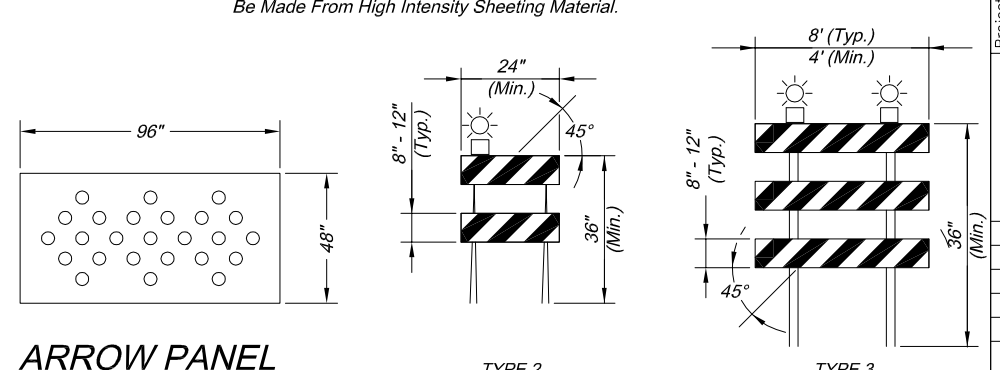

ARROW PANEL

TYPE 2

TYPE 3

BARRICADES

CITY OF LEE'S SUMMIT
PUBLIC WORKS DEPARTMENT
ENGINEERING DIVISION
220 SE GREEN STREET
LEE'S SUMMIT, MISSOURI 64063
PHONE: (816) 969-1800 FAX: (816) 969-1809

Project:

TRAFFIC CONTROL DETAILS

Sheet Name: STANDARD DRAWING TC-1

Drawn By: JJW
Checked By: MP
Date: 12-10-2008
Project No.: X

x OF x

X

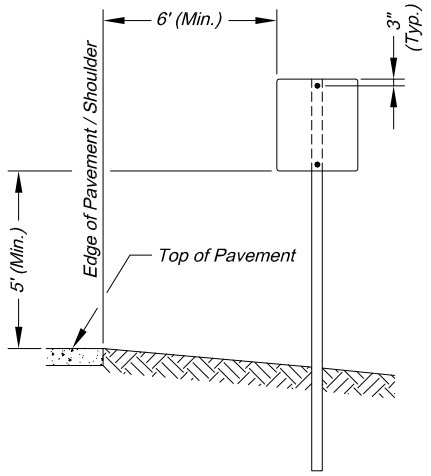

SIGN INSTALLATION FOR NON-CURBED STREET

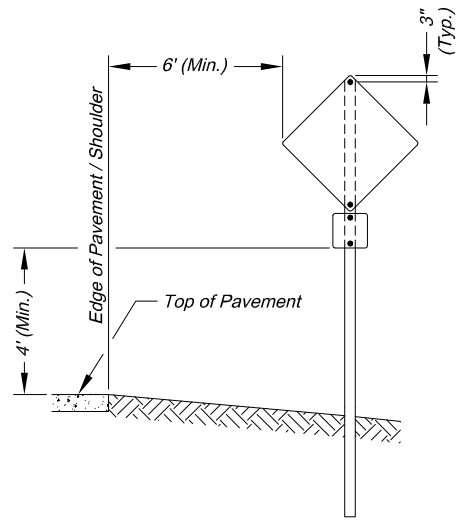

SIGN INSTALLATION WITH AUXILARY SIGN FOR NON-CURBED STREET

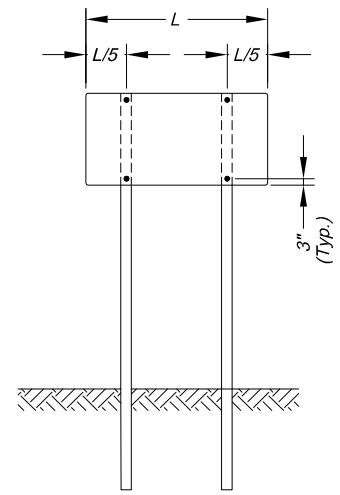

SIGN INSTALLATION WITH TWO SIGN POSTS

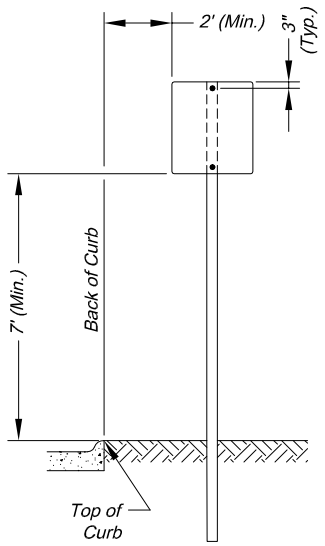

SIGN INSTALLATION FOR CURBED STREET

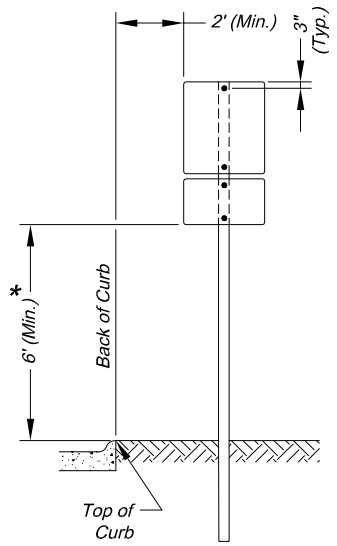

SIGN INSTALLATION WITH AUXILARY SIGN FOR CURBED STREET

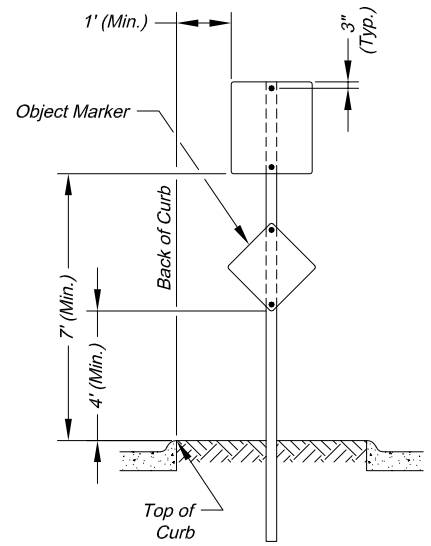

SIGN INSTALLATION FOR RAISED MEDIANS

SIGN MOUNTING DETAILS

* The height to the bottom of a sign when it is located in a pedestrian walkway or extends into a walkway shall be a minimum of 80 inches above the walkway.

NOTE:
1. Generally, the sign mounting height should not be more than 1' greater than the minimum mounting height.

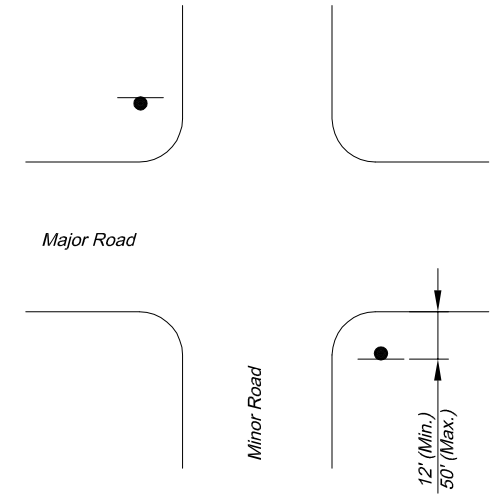

NON-CURBED INTERSECTION INSTALLATION

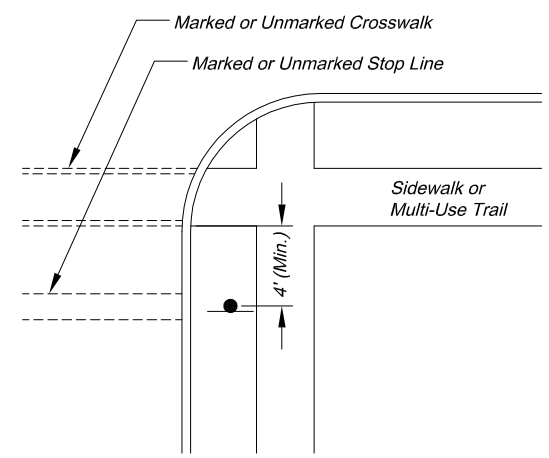

INTERSECTION WITH SIDEWALK / MULTI-USE TRAIL INSTALLATION

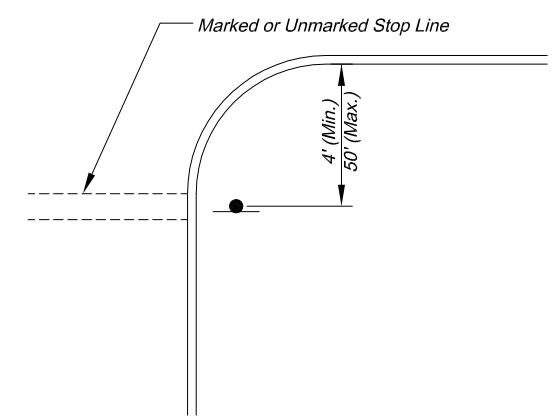

CURBED INTERSECTION INSTALLATION

CONTROL SIGN LOCATION

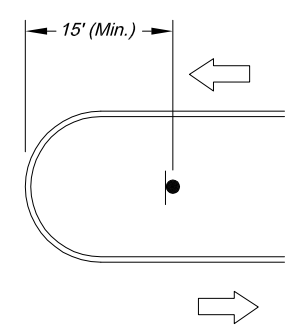

TYPICAL MEDIAN SIGN LOCATION

MEDIAN SIGN LOCATION

NOTES:
1. A 4" P.V.C. sleeve shall be installed in new concrete medians at each location where a sign is to be installed.
2. For existing concrete medians, a 4" hole shall be cored into the concrete.

CITY OF LEE'S SUMMIT
PUBLIC WORKS DEPARTMENT
ENGINEERING DIVISION
220 SE GREEN STREET
LEE'S SUMMIT, MISSOURI 64063
PHONE: (816) 969-1800 FAX: (816) 969-1809

Project:

SIGN MOUNTING DETAILS

Sheet Name: STANDARD DRAWING SN-1

Drawn By: AS
Checked By: JW
Date: 08/26/2009
Project#

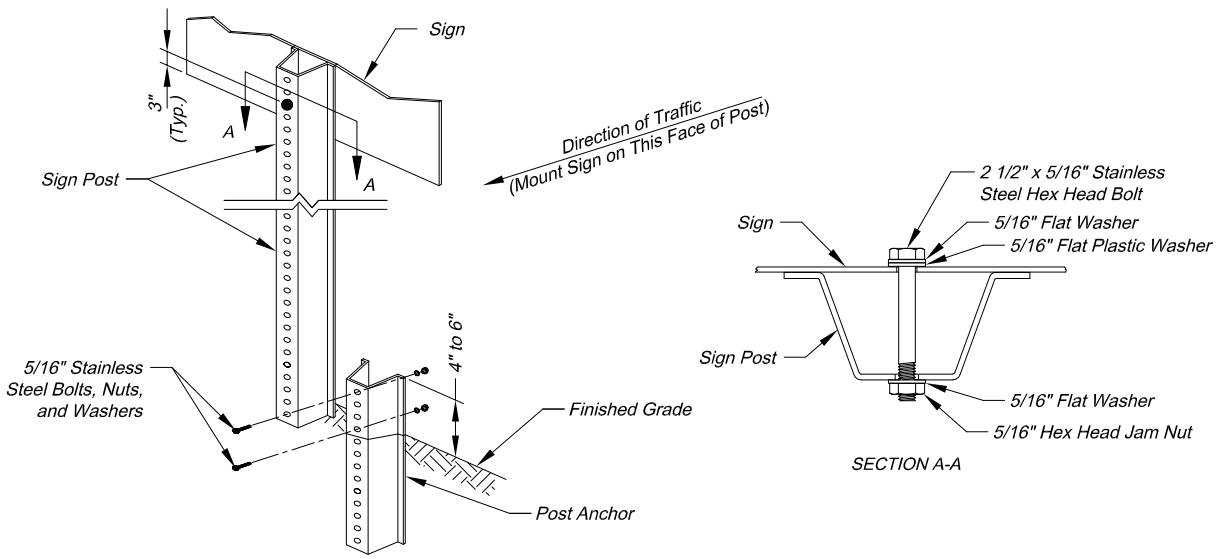

U-STEEL POST DETAILS

U-STEEL POST NOTES:
1. Splice shall be positioned entirely between finished grade line and 18" above finished grade line. Only one splice will be allowed per post.
2. U-Steel post shall be 3 lb./ft., galvanized according to ASTM A123.
3. U-Steel post can be used for installation of signs with an area of less than 2.5 square feet.
4. All posts shall be embedded a minimum of 3 feet.

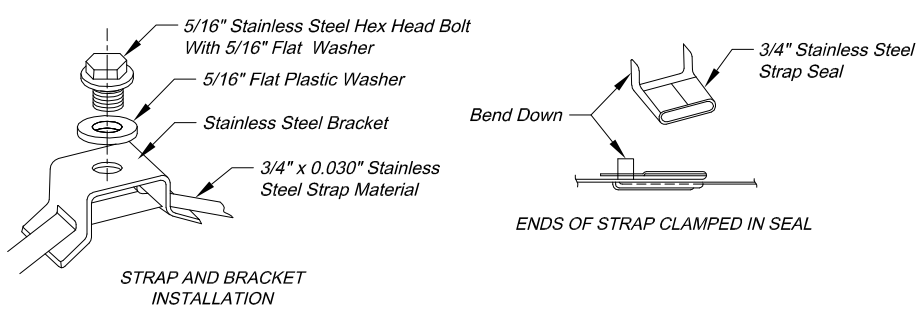

STRAP TYPE SIGN SUPPORT DETAILS

METAL POLE SIGN MOUNTING NOTES:
1. Signs on metal poles shall be attached with two brackets and stainless steel bands.
2. Holes in sign for attachment to the mounting brackets shall be offset a minimum of 2 inches from the edge of the sign.
3. Holes in sign shall be located such that the sign is level.
4. All strap, bracket, and seal materials should be Type 201 stainless steel.

PERMANENT SIGNING GENERAL NOTES:
1. All signing shall be in accordance with the latest edition of the Manual on Uniform Traffic Control Devices (MUTCD).
2. The Contractor is responsible for avoiding any and all utilities when installing sign posts, whether the utility is indicated on the plans or not.
3. All workmanship and materials shall be subject to the inspection and approval of the Public Works Department of the City of Lee's Summit.
4. The Contractor shall stake the location of all sign posts to be installed. The City Inspector shall inspect the staking prior to installation. Minor relocation to avoid conflicts may be allowed with the approval of the City Traffic Engineer or designee.
5. Signs shown to be installed on the side of metal poles shall be mounted with stainless steel straps or wing brackets as detailed. No signs are to be installed on wood poles. See Traffic Signal Standard Drawings for the installation of signs on mast arms.
6. All post mounted signs shall be installed with breakaway anchors according to the Standard Drawings.
7. All existing signs will be used in place during construction and protected from damage unless otherwise indicated in the plans. If the Contractor damages any existing sign or posts during construction, the Contractor will be required to replace the damaged materials with new signs or posts of the same type and size at the Contractor's expense. The Contractor shall be responsible for removing and storing any signs that are to be reinstalled on the project. All equipment shall be reinstalled in good condition.
8. Existing permanent signs and posts removed by the Contractor for construction purposes which are not to be reinstalled shall be delivered to the City's Public Works Maintenance Facility (1971 SE Hamblen Road). The Contractor shall be responsible for removing and storing equipment in good condition and is fully responsible for the equipment until it is delivered.
9. All Stop, Yield, or street name signs shall be maintained in a conspicuous location for the driving public. All Stop and Yield signs removed for construction purposes can be temporarily erected in reflectorized drums (no less than 7 feet above the pavement surface) until they can be reinstalled. Any temporary Stop or Yield sign installation to be left in place overnight will require prior approval from the City Inspector.

SQUARE STEEL POST INSTALLATION SEQUENCE:
1. Sign post anchor driven partially into the ground using a drive cap with a sledge or power equipment.
2. Anchor sleeve slipped over anchor and drive into the ground together with the sign post anchor.
3. Insert sign post into the post anchor and bolt in place.

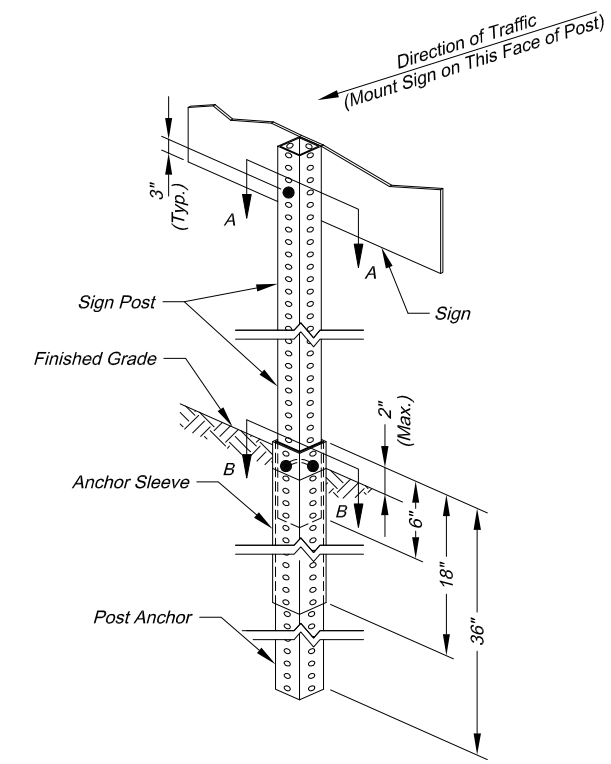

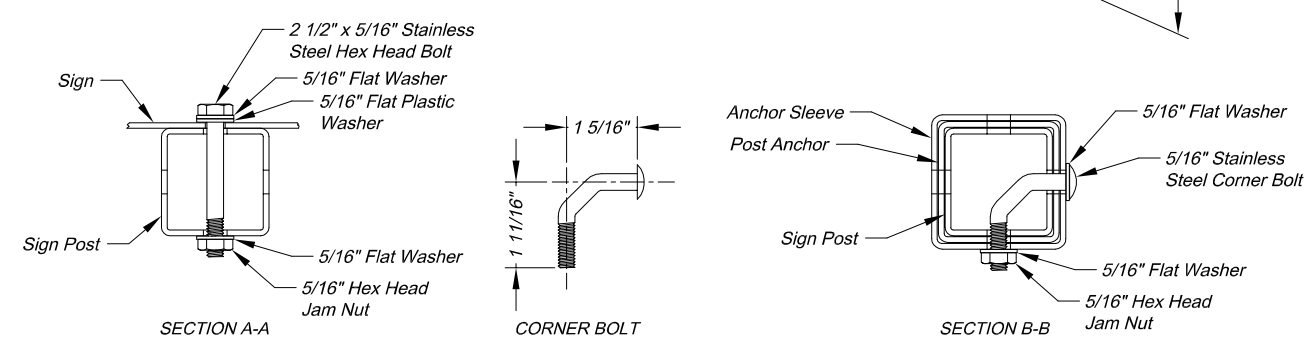

SQUARE STEEL POST DETAILS

SQUARE STEEL POST NOTES:
1. Square steel sign posts and break-away anchor shall consist of the following materials:
   - Sign Post - 14 Ga. 2" x 2" Square Steel Post
   - Post Anchor - 12 Ga. 2 ¼" x 2 ¼" x 36" Square Steel Post
   - Anchor Sleeve - 12 Ga. 2 ½" x 2 ½" x 18" Square Steel Post
2. 14 Gauge posts must meet a certified minimum yield strength of 60,000 psi.
3. In all installations the first hole above the finished grade line on the sign post, anchor, and anchor sleeve must be in line for the insertion of the corner bolt.
4. The maximum area for one sign post is 9.0 square feet. A sign or combination of signs with an area greater than 9.0 square feet will require two posts. Also, signs with a width greater than 36" (not including 36" x 36" diamond shaped signs) will require two posts.

CITY OF LEE'S SUMMIT
PUBLIC WORKS DEPARTMENT
ENGINEERING DIVISION
220 SE GREEN STREET
LEE'S SUMMIT, MISSOURI 64063
PHONE: (816) 969-1800 FAX: (816) 969-1809

Project:

SIGN POST DETAILS

Sheet Name: STANDARD DRAWING SN-2

Drawn By: AS
Checked By: JW
Date: 08/26/2009
Project#

STANDARD ABBREVIATION LISTS

Named Streets	
Avenue	AVE
Boulevard	BLVD
Circle	CIR
Creek	CR
Court	CT
Crossing	XING
Drive	DR
Highway	HWY
Lane	LN
Parkway	PKWY
Place	PL
Road	RD
Street	ST
Terrace	TER
Trail	TRL
Way	WAY

Numbered Streets	
First	ST
Second	ND
Third	RD
Fourth to Tenth	TH

STREET NAME SIGN QUANTITIES

Sign Designation	Sign Size	Sign Area (Sq. Ft.)	Number	Quantity (Sq. Ft.)
D3-1 (SP-1)	9" x	Sq. Ft.	1	1
D3-1 (SP-2)	9" x			
D3-1 (SP-3)	9" x			
D3-1 (SP-4)	9" x			
D3-1 (SP-5)	9" x			
D3-1 (SP-6)	9" x			

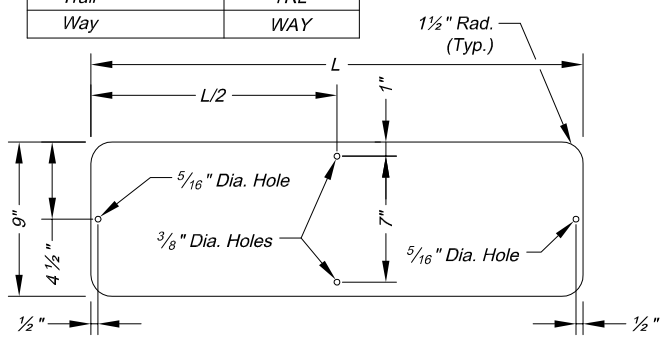

STREET NAME SIGN BLANK DETAILS

For Mounting on Square Steel Posts

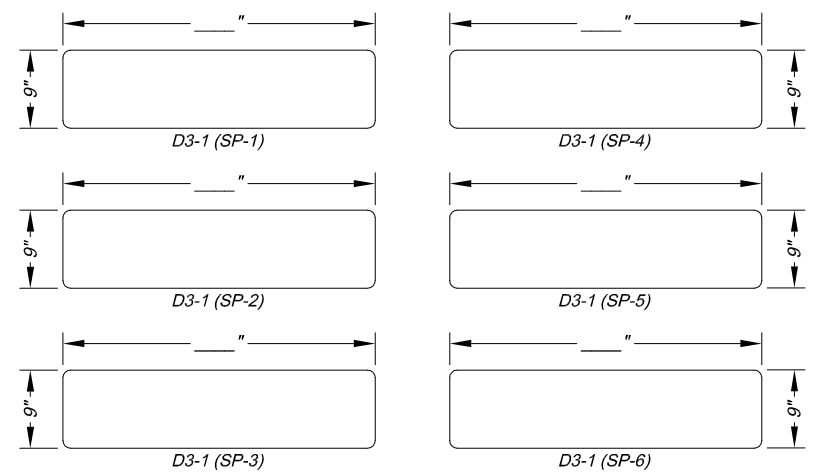

PROJECT SIGN DETAILS

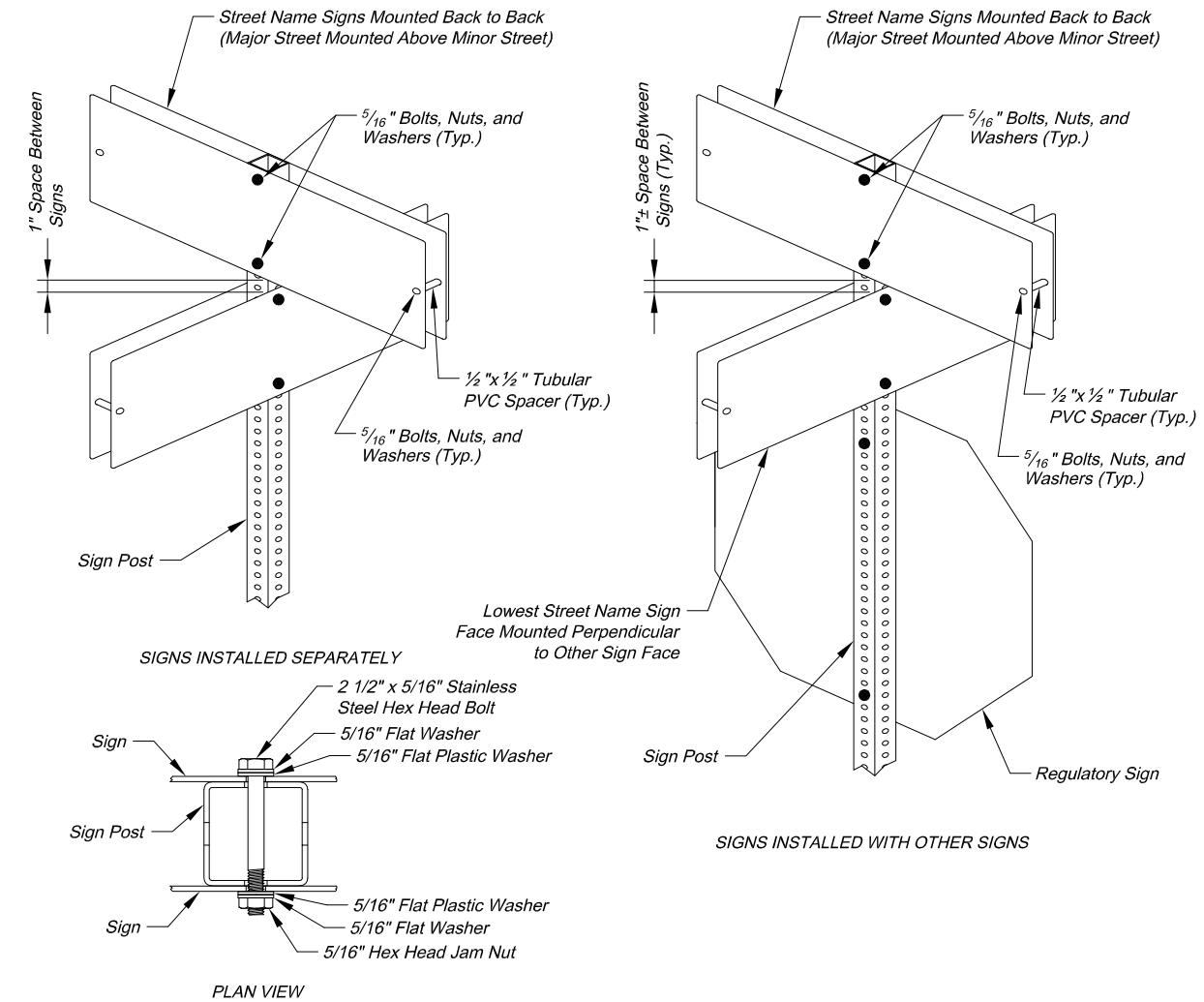

SQUARE STEEL POST MOUNTING DETAILS

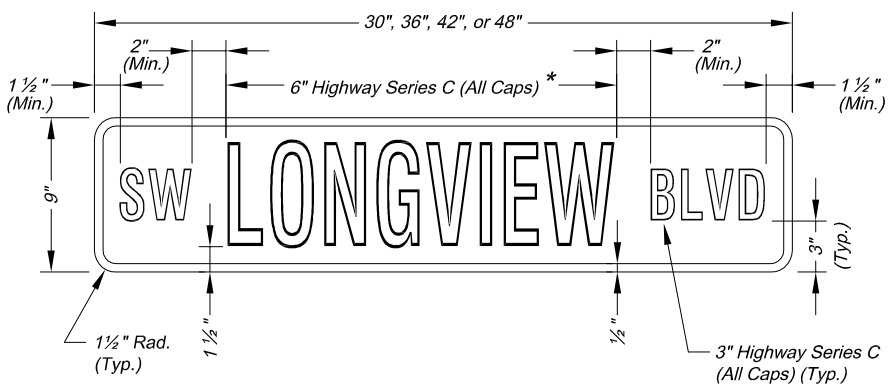

NAMED STREET NAME SIGN DETAIL

* Use Highway Series B (All Caps) in lieu of series C if necesary to fit text on a 36" sign blank.

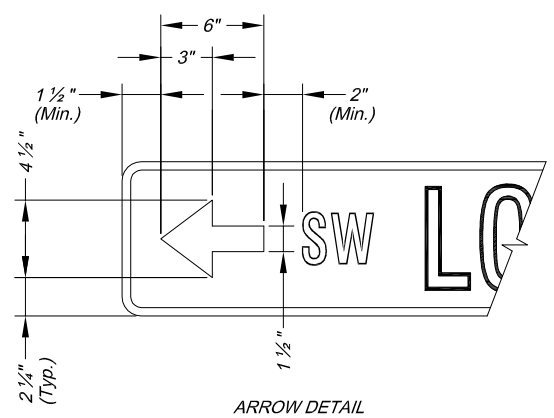

ARROW DETAIL

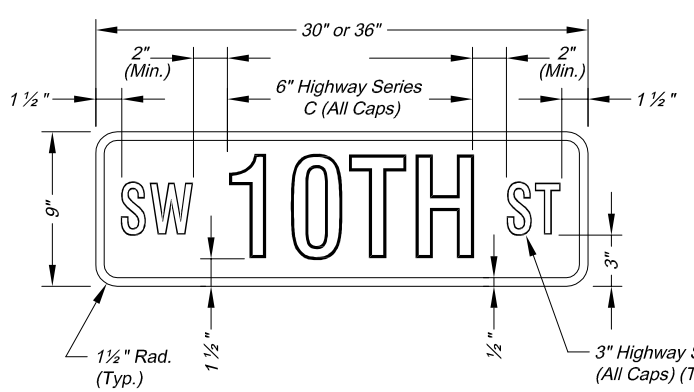

NUMBERED STREET NAME SIGN DETAIL

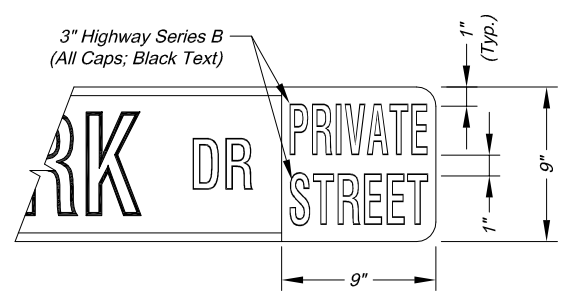

PRIVATE STREET TAG DETAIL

NOTES:

1. For all street name signs, the legend shall be white and the background shall be green.
2. Arrows shall be added to street name signs where the name of a street changes at an intersection. Street name signs with arrows are to be installed on each side of the intersection to indicate the change in names. Arrows shall be white.
3. The "PRIVATE STREET" tag should be added to the end of street name signs to indicate where a street that is outside the right-of-way intersects a public street. The background for the "PRIVATE STREET" tag shall be yellow.

STREET NAME SIGN FACE DETAILS

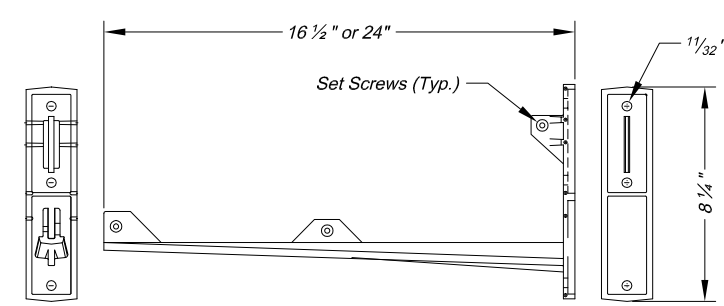

NOTES:

1. Wing bracket shall be an L-shaped cantilever of T-beam rigid frame 380-3 aluminum alloy construction.
2. Mount each wing bracket to metal pole using two ¾" wide stainless steel straps.
3. One wing bracket shall be installed per each sign. Cross brackets are not allowed.

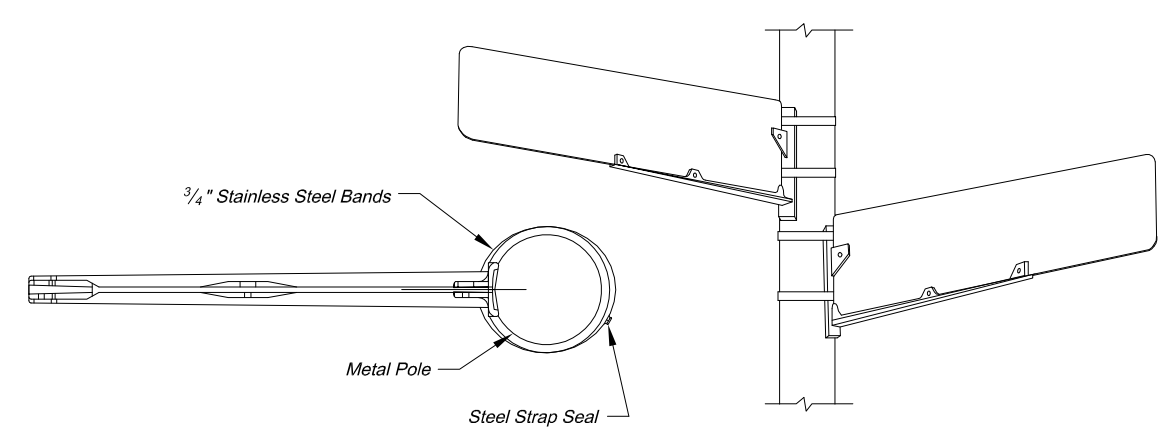

WING BRACKET MOUNTING DETAILS

CITY OF LEE'S SUMMIT
PUBLIC WORKS DEPARTMENT
ENGINEERING DIVISION
220 SE GREEN STREET
LEE'S SUMMIT, MISSOURI 64063
PHONE: (816) 969-1800 FAX: (816) 969-1809

Project:

STREET NAME SIGN DETAILS

Sheet Name: STANDARD DRAWING SN-3

Drawn By: AS
Checked By: JW
Date: 08/26/2009
Project#

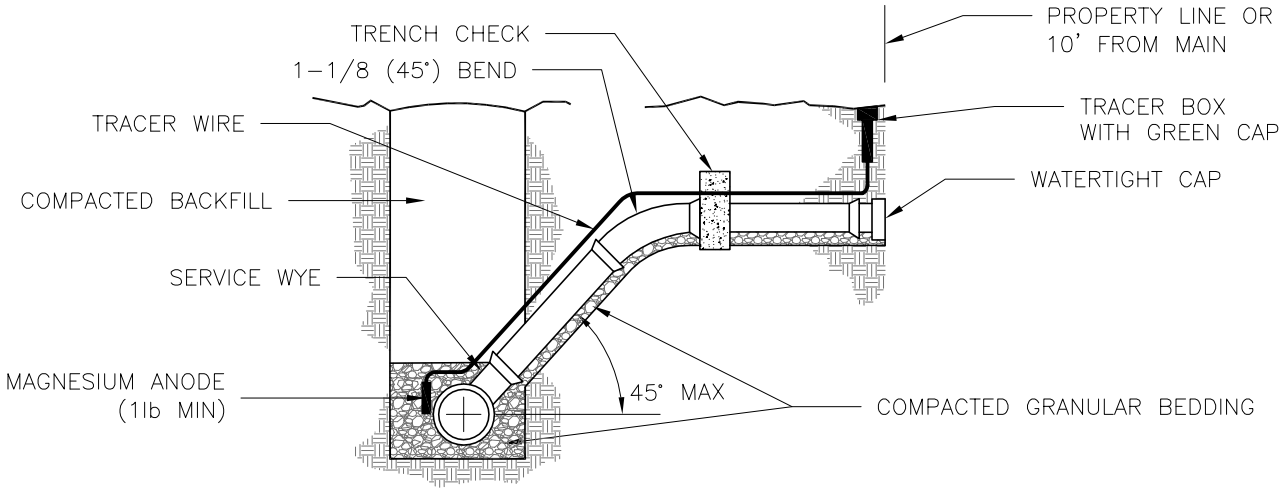

STANDARD INSTALLATION
NOT TO SCALE

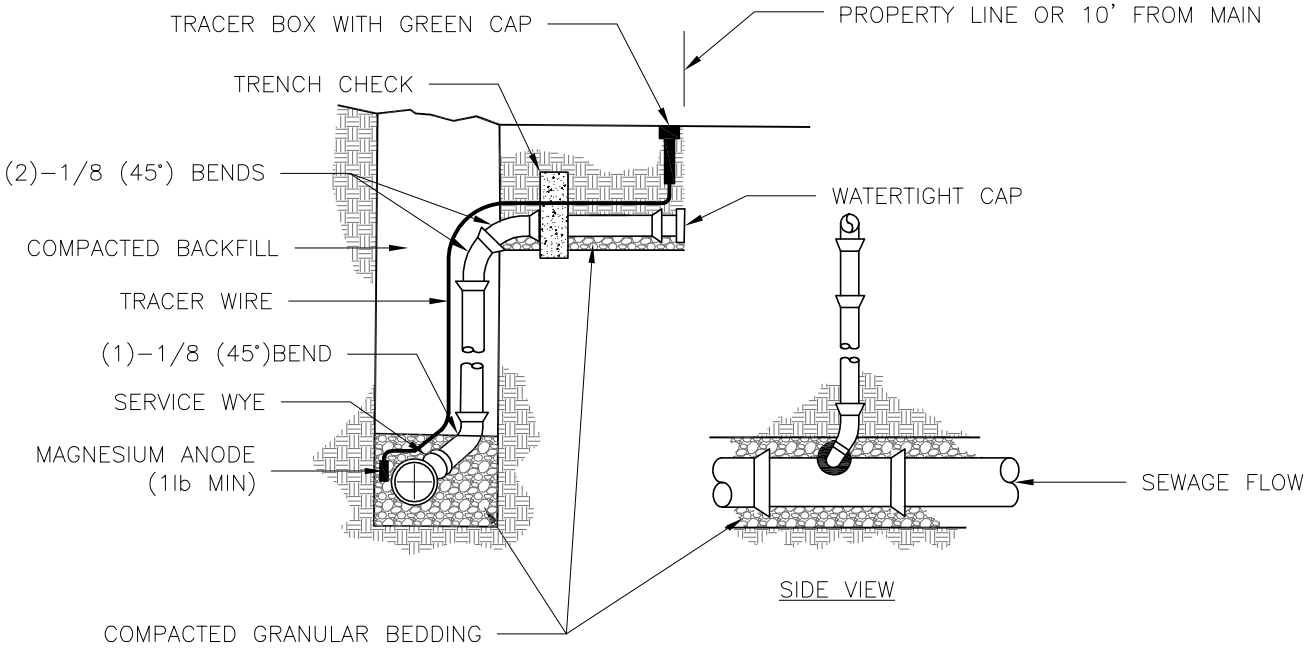

VERTICAL RISER
NOT TO SCALE

NOTES:

1. ALL SEWER STUBS SHALL BE CONSTRUCTED TO PROPERTY LINE OR 10' MINIMUM FROM THE MAIN. WHERE SIDEWALKS ARE PRESENT, CONTRACTOR SHALL EXTEND SERVICE LINE UNDER EXISTING SIDEWALK TO TWO FEET BEYOND.
2. IMPERVIOUS TRENCH CHECKS SHALL BE PLACED ON BUILDING SEWER STUBS (AT LEAST 5' AWAY FROM THE SANITARY SEWER MAIN).
3. TRENCH CHECKS ON THE BUILDING SEWER STUBS SHALL EXTEND 6" BELOW THE BOTTOM OF THE PIPE. LENGTH SHALL BE A MINIMUM OF 12". THE HEIGHT OF THE TRENCH CHECK SHALL EXTEND 12" ABOVE THE TOP OF THE PIPE. THE WIDTH OF THE TRENCH CHECK SHALL BE THE WIDTH OF THE TRENCH.
4. SEE SPECIFICATION SECTION 2100 FOR SEWER MAIN BEDDING AND BACKFILL.
5. #12 GAUGE GREEN INSULATED COPPER TRACER WIRE SHALL BE INSTALLED. TRACER WIRE TERMINAL BOXES SHALL BE INSTALLED DIRECTLY ABOVE THE SEWER SERVICE OR AS DETERMINED BY THE ENGINEER.
6. FOR SERVICES, TRACER WIRE SHALL RUN FROM THE WYE AND TERMINATE IN A FLUSH MOUNTED TRACER BOX WITH A GREEN CAST IRON LOCKABLE TOP. WIRE SHALL BE TAPED OR TIED TO THE PIPE AT 5' INTERVALS.
7. TRACER WIRE BOX SHALL BE INSTALLED WITHIN 1.0' OF PROPERTY LINE.
8. THE TRACER WIRE SHALL REMAIN CONTINUOUS TO THE GREATEST EXTENT POSSIBLE. SPLICES IN THE TRACER WIRE SHOULD BE MADE WITH SPLIT BOLT CONNECTORS. WIRE NUTS SHALL NOT BE USED. A WATER-PROOF CONNECTION IS NECESSARY TO PREVENT CORROSION.

LS	LEE'S SUMMIT MISSOURI PUBLIC WORKS ENGINEERING DIVISION | 220 SE GREEN STREET | LEE'S SUMMIT, MO 64063	Date: 12/13 Drawn By: SC Checked By: DL FILE: SAN-1
	BUILDING SEWER STUB AND RISER	Rev: 10/15 Rev: 12/15

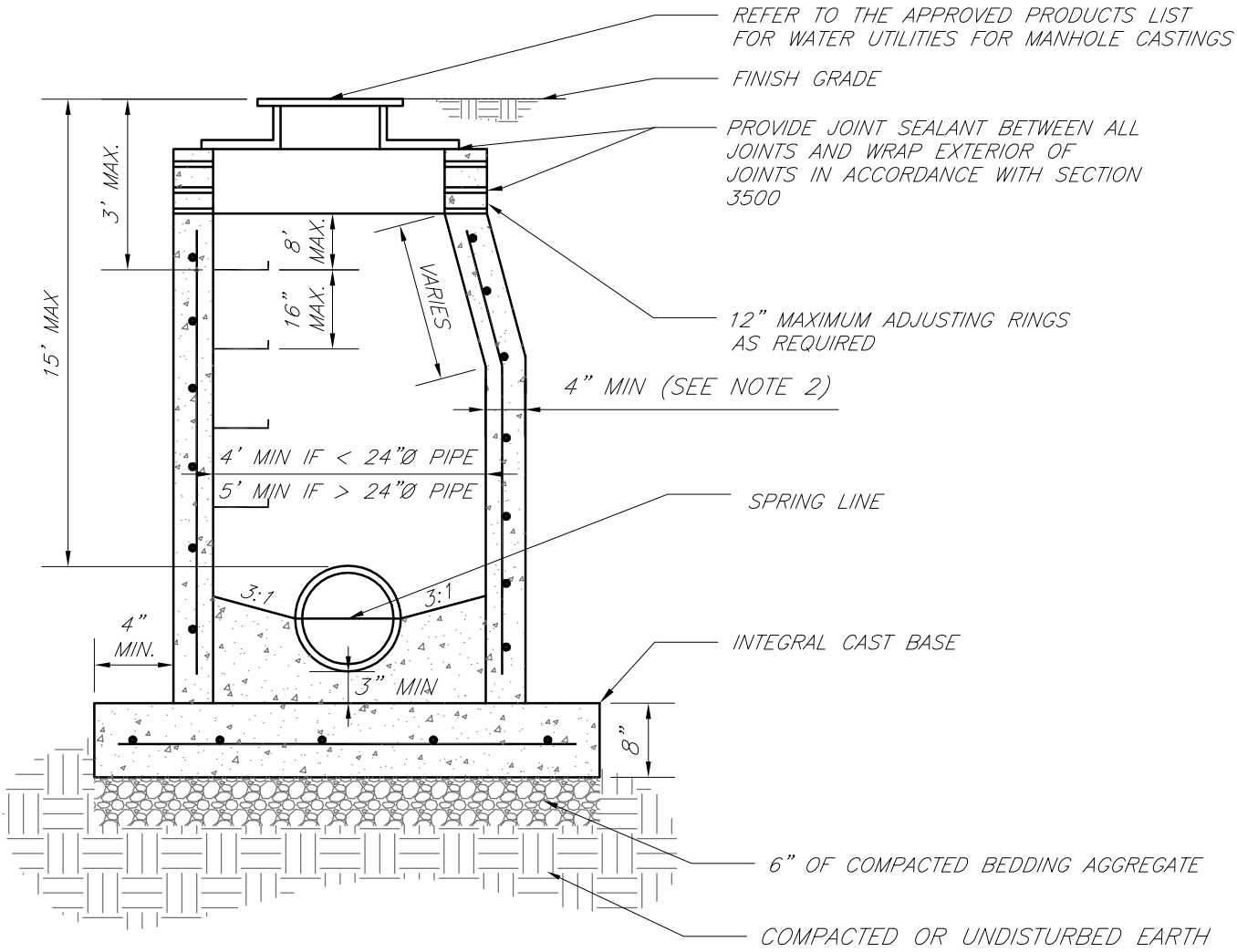

NOTES:

1. PRECAST CONCRETE MANHOLES SHALL CONFORM TO ASTM C478 EXCEPT AS MODIFIED BY THE SPECIFICATIONS.
2. A WALL THICKNESS NOT LESS THAN ONE–TWELFTH (1/12) OF THE INSIDE DIAMETER OR 4", WHICHEVER IS GREATER, SHALL BE USED WHEN THE MANHOLE DEPTH IS LESS THEN 15'.
3. WATERPROOFING SHALL BE REQUIRED ON THE OUTSIDE OF MANHOLES. THE WATERPROOFING SHALL CONSIST OF A TOTAL DRY FILM THICKNESS OF NOT LESS THAN 14 MILS OF BITUMINOUS COATING.
4. ONLY ECCENTRIC MANHOLE CONES WILL BE ALLOWED UNLESS OTHERWISE APPROVED BY THE CITY ENGINEER.
5. THE FILL CONCRETE FLOW CHANNEL FOR SIDE BRANCHES SHALL BE PLACED TO PROVIDE A SMOOTH TRANSITION INTO THE FLOW LINE.
6. REFER TO THE APPROVED PRODUCTS LIST FOR WATER UTILITIES FOR APPROVED MANHOLE GASKET MODELS.
7. REFER TO THE APPROVED PRODUCTS LIST FOR APPROVED STEPS.

LS	**LEE'S SUMMIT** MISSOURI PUBLIC WORKS ENGINEERING DIVISION | 220 SE GREEN STREET | LEE'S SUMMIT, MO 64063	Date: 02/13
		Drawn By: JN
		Checked By: DL
		FILE: SAN–2
	STANDARD PRECAST MANHOLE – SANITARY SEWER	Rev: 1/14
		Rev:

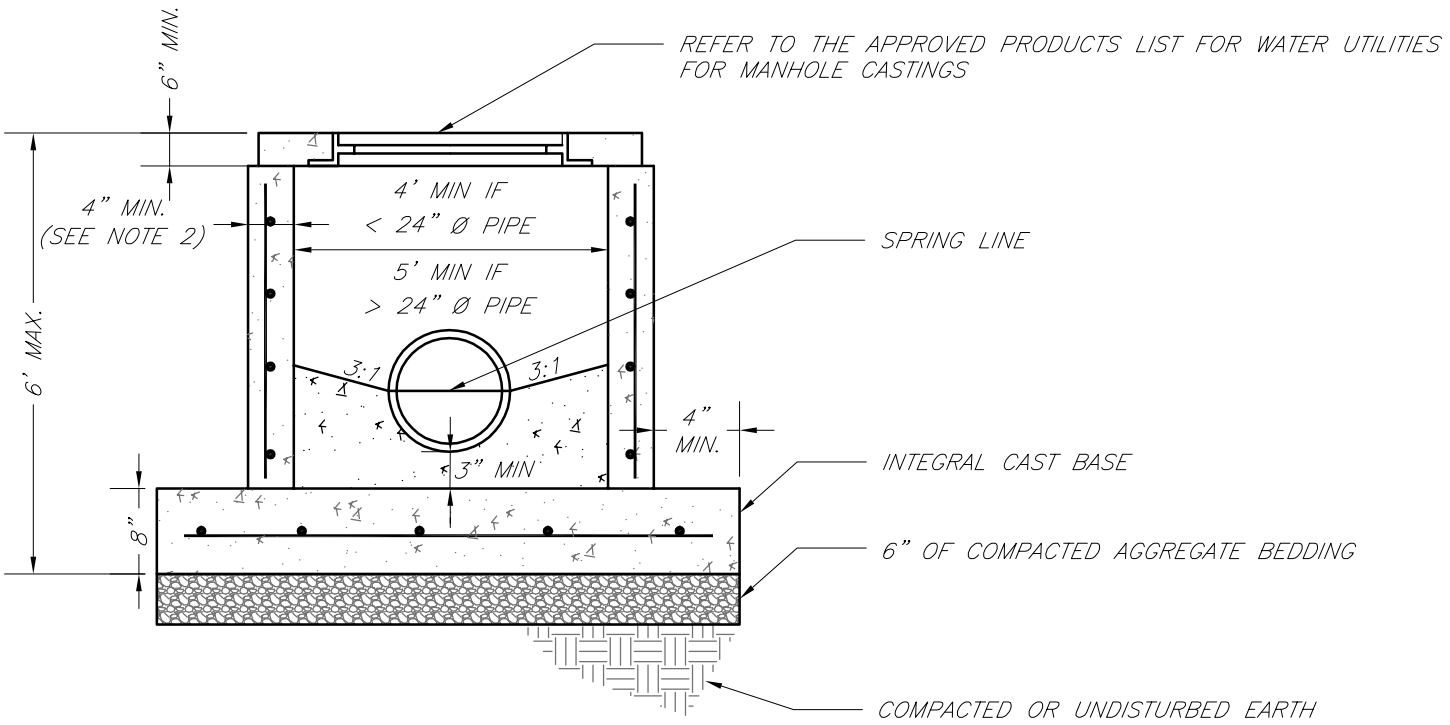

ELEVATION

NOTES:

1. PRECAST CONCRETE MANHOLES SHALL CONFORM TO ASTM C478 EXCEPT AS MODIFIED BY THE SPECIFICATIONS.
2. A WALL THICKNESS NOT LESS THAN ONE-TWELFTH (1/12) OF THE INSIDE DIAMETER OR 4", WHICHEVER IS GREATER SHALL BE USED.
3. WATERPROOFING SHALL BE REQUIRED ON THE OUTSIDE OF MANHOLES. THE WATERPROOFING SHALL CONSIST OF A TOTAL DRY FILM THICKNESS OF NOT LESS THEN 14 MILS OF BITUMINOUS COATING.
4. THE FILL CONCRETE FLOW CHANNEL FOR SIDE BRANCHES SHALL BE PLACED TO PROVIDE A SMOOTH TRANSITION INTO THE FLOW LINE.
5. REFER TO THE APPROVED PRODUCTS LIST FOR WATER UTILITIES FOR MANHOLE GASKET MODELS.
6. PROVIDE STEPS AS SHOWN ON THE APPROVED PRODUCTS LIST FOR MANHOLE DEPTHS GREATER THAN 4'.

LS	LEE'S SUMMIT MISSOURI PUBLIC WORKS ENGINEERING DIVISION | 220 SE GREEN STREET | LEE'S SUMMIT, MO 64063	Date: 02/13
		Drawn By: JN
		Checked By: DL
		FILE: SAN-3
	SHALLOW PRECAST MANHOLE – SANITARY SEWER	Rev: 1/14
		Rev:

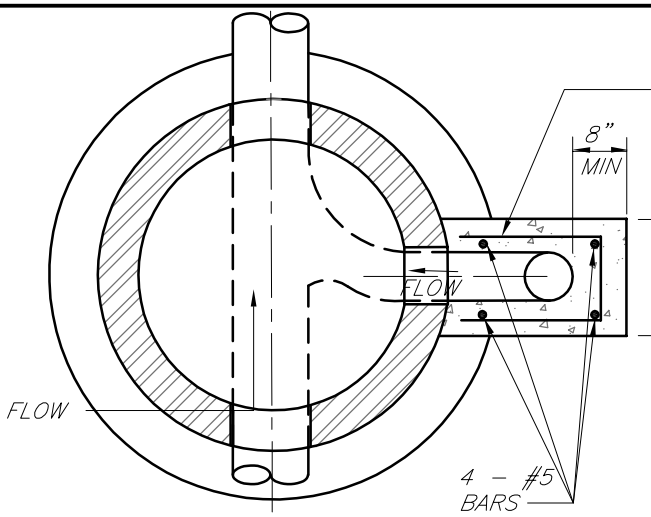

SECTION A–A

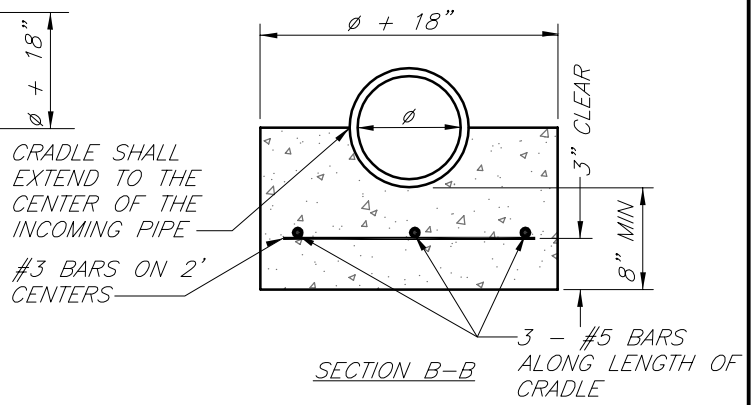

SECTION B–B

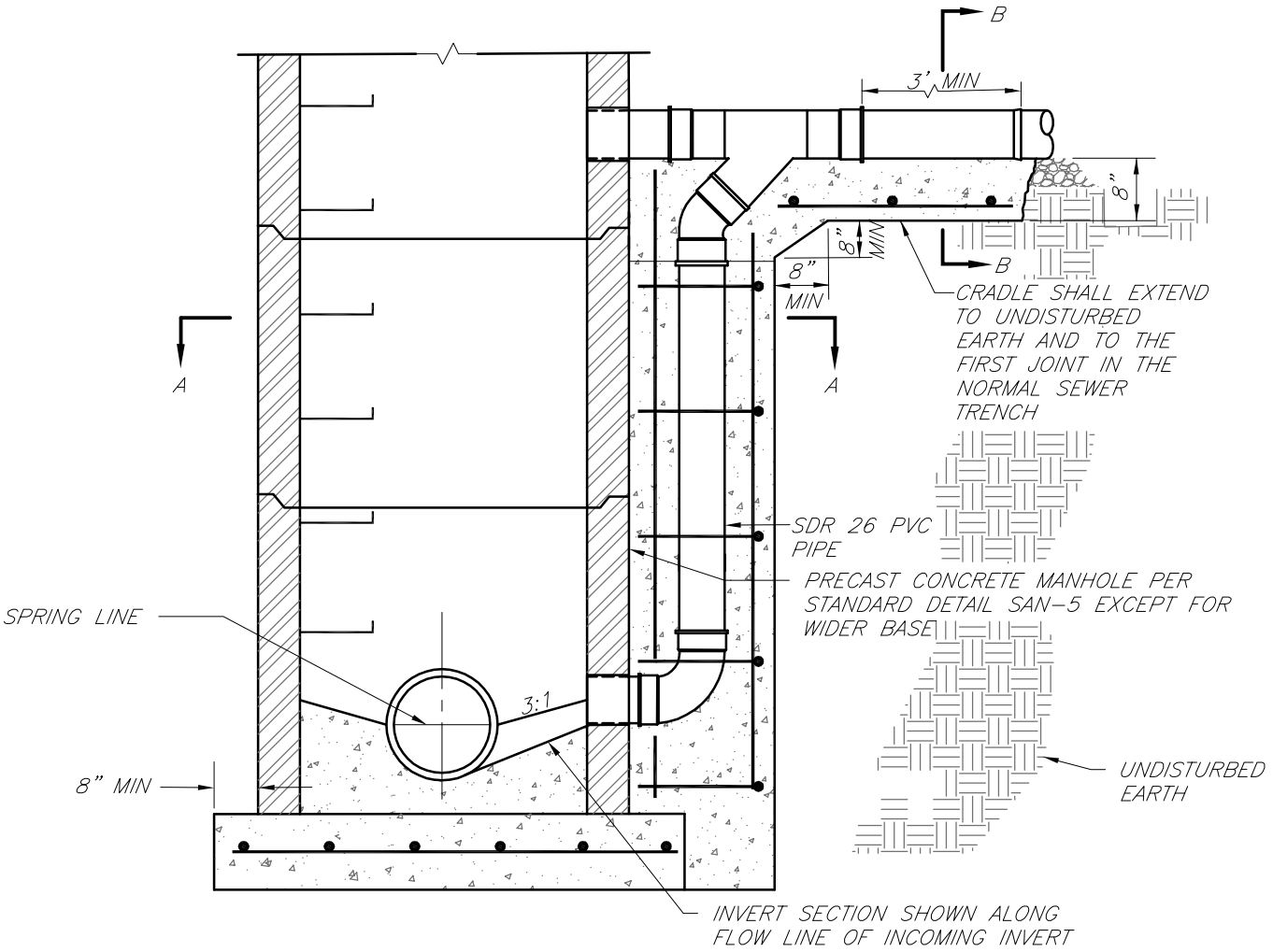

ELEVATION

NOTE:
REFER TO DRAWING SAN–2 FOR MANHOLE DETAILS NOT SHOWN.

LS	LEE'S SUMMIT MISSOURI PUBLIC WORKS ENGINEERING DIVISION | 220 SE GREEN STREET | LEE'S SUMMIT, MO 64063	Date: 02/13
		Drawn By: JN
		Checked By: DL
		FILE: SAN–4
	DROP SANITARY SEWER MANHOLE	Rev: 1/14
		Rev:

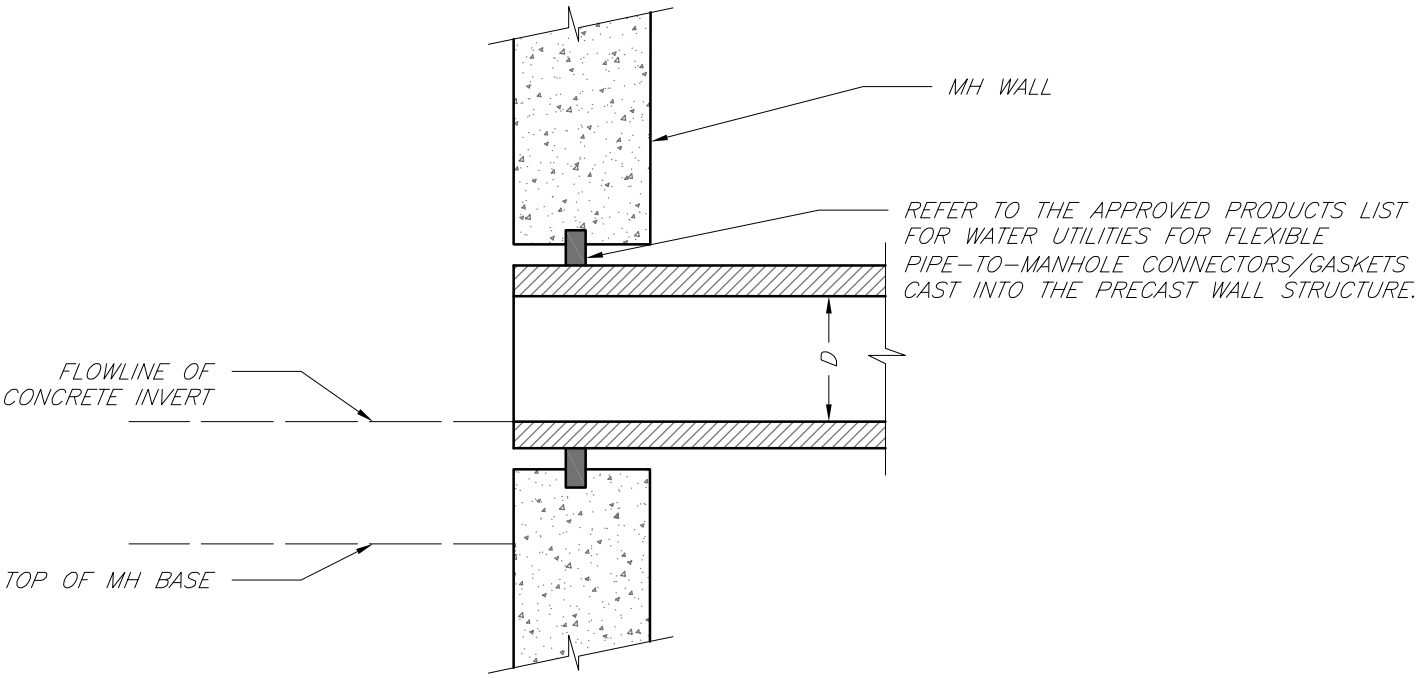

NEW MANHOLE

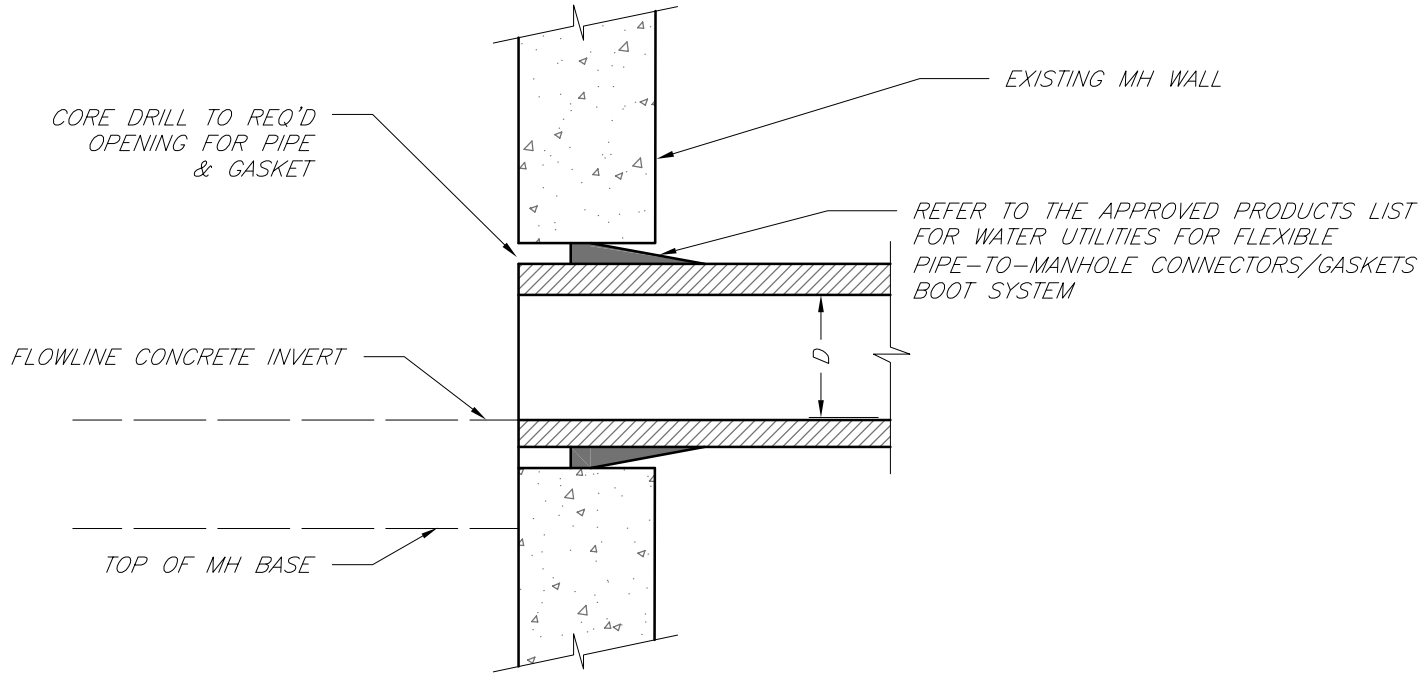

EXISTING MANHOLE

LS	**LEE'S SUMMIT** MISSOURI PUBLIC WORKS ENGINEERING DIVISION | 220 SE GREEN STREET | LEE'S SUMMIT, MO 64063	Date: 02/13
		Drawn By: JN
		Checked By: DL
		FILE: SAN-5
	MANHOLE WALL CONNECTIONS	Rev: 1/14
		Rev:

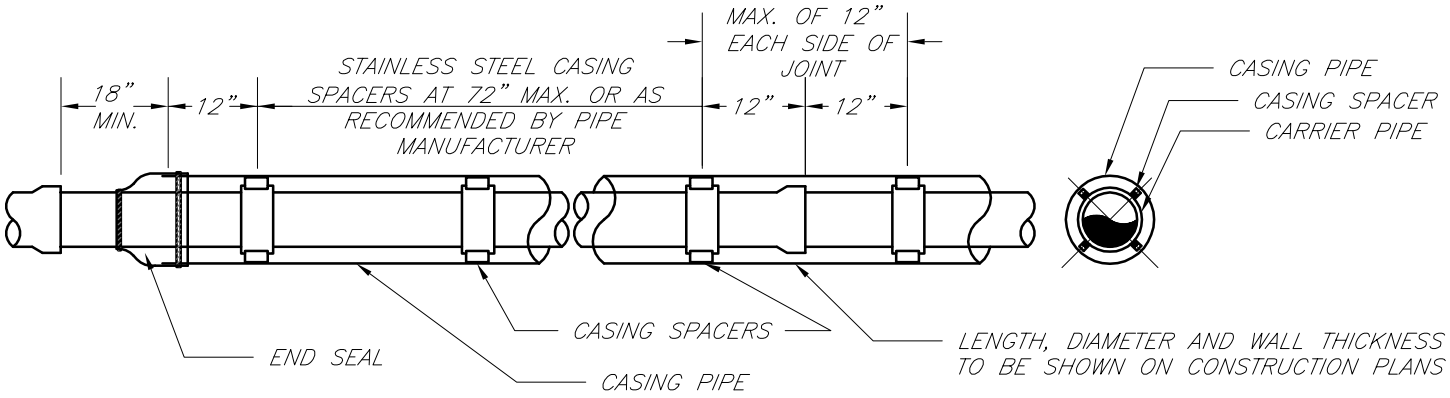

STAINLESS STEEL SPACERS

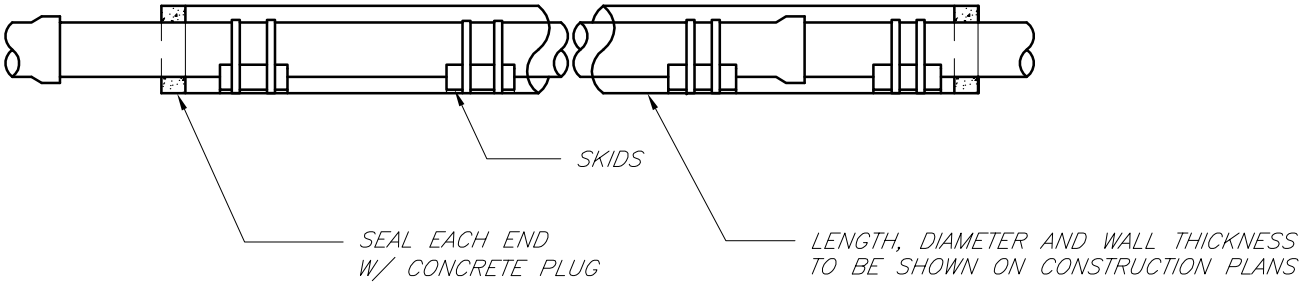

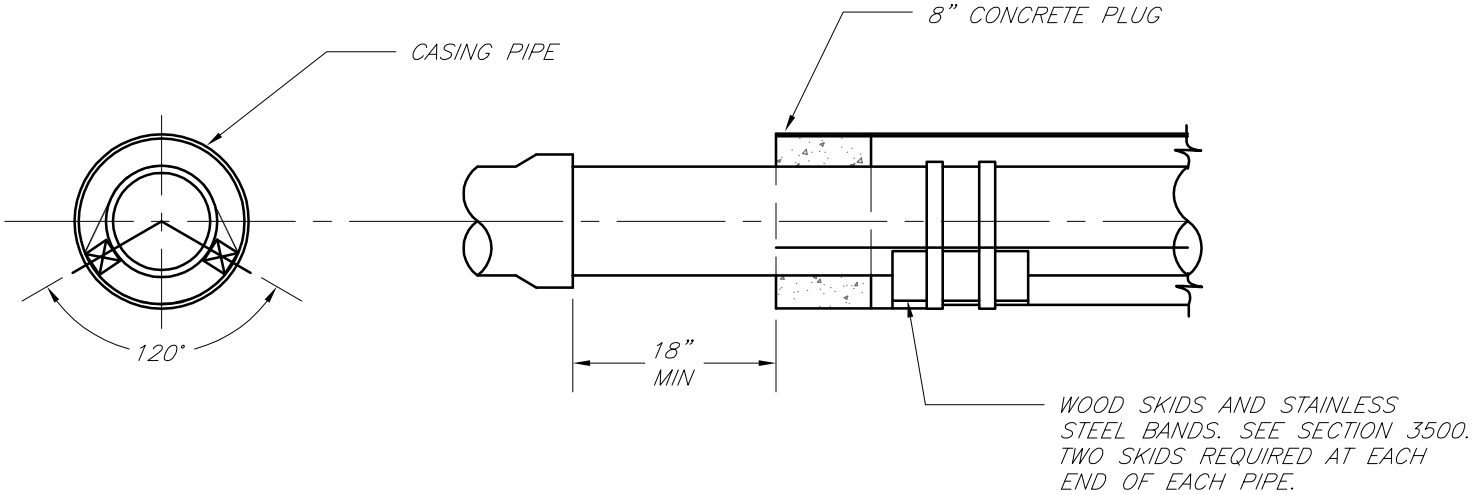

WOOD SKIDS

NOTE:
IF WOOD SKIDS ARE USED, ANNULAR SPACE BETWEEN CASING PIPE AND CARRIER PIPE SHALL BE FILLED WITH SAND.

LS	LEE'S SUMMIT MISSOURI PUBLIC WORKS ENGINEERING DIVISION | 220 SE GREEN STREET | LEE'S SUMMIT, MO 64063	Date: 02/13
		Drawn By: JN
		Checked By: DL
		FILE: SAN-6
	CASING PIPE DETAIL	Rev: 1/14
		Rev:

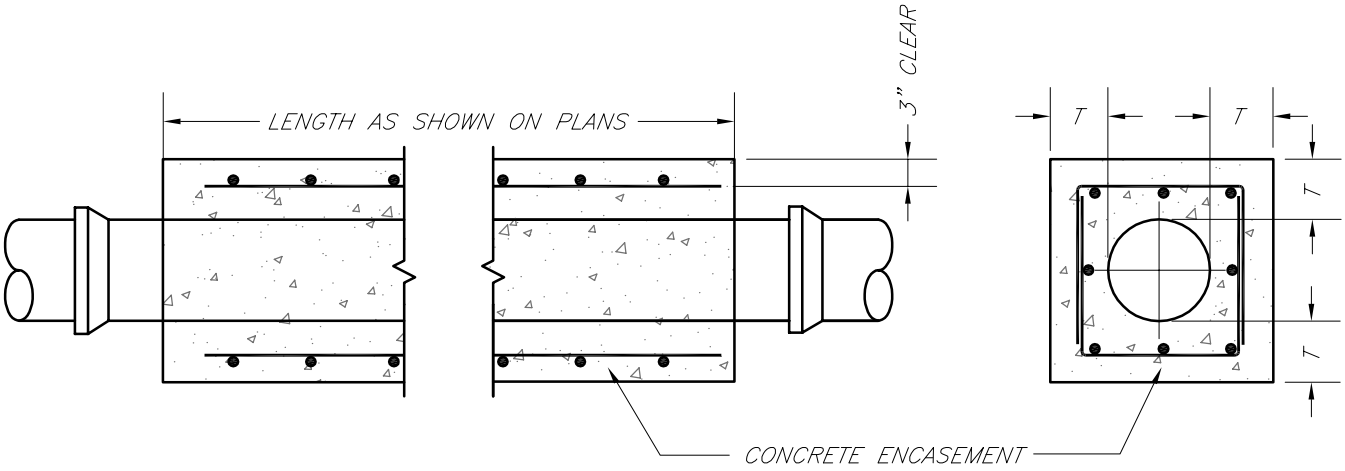

NOTES:

1. FOR PIPES LESS THAN 15", T = 6" MIN.
2. FOR PIPES 15" THRU 36", T = 8" MIN.
3. INTERMEDIATE BELLS SHALL BE ENCASED.
4. REINFORCING STEEL SHALL BE #4 @ 12" O.C. EACH WAY WITH A MINIMUM REBAR LAP OF 12".

LS	**LEE'S SUMMIT** **MISSOURI** PUBLIC WORKS ENGINEERING DIVISION | 220 SE GREEN STREET | LEE'S SUMMIT, MO 64063	Date: 02/13
		Drawn By: JN
		Checked By: DL
		FILE: SAN–7
	SANITARY PIPE ENCASEMENT	Rev: 1/14
		Rev:

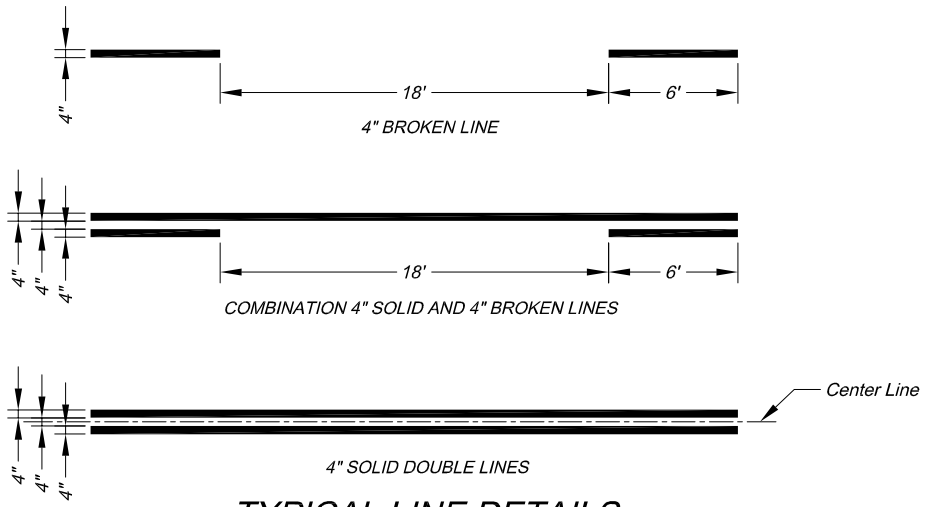

TYPICAL LINE DETAILS

NOTES:
1. All edge line, center line, and lane line pavement markings shall be 4" wide unless otherwise noted.
2. Edge lines shall be continuous solid white or yellow lines. Right side edge lines shall be solid white. Median or left side edge lines on divided roadways are to be solid yellow. Edge lines and center lines shall be continuous across driveways.

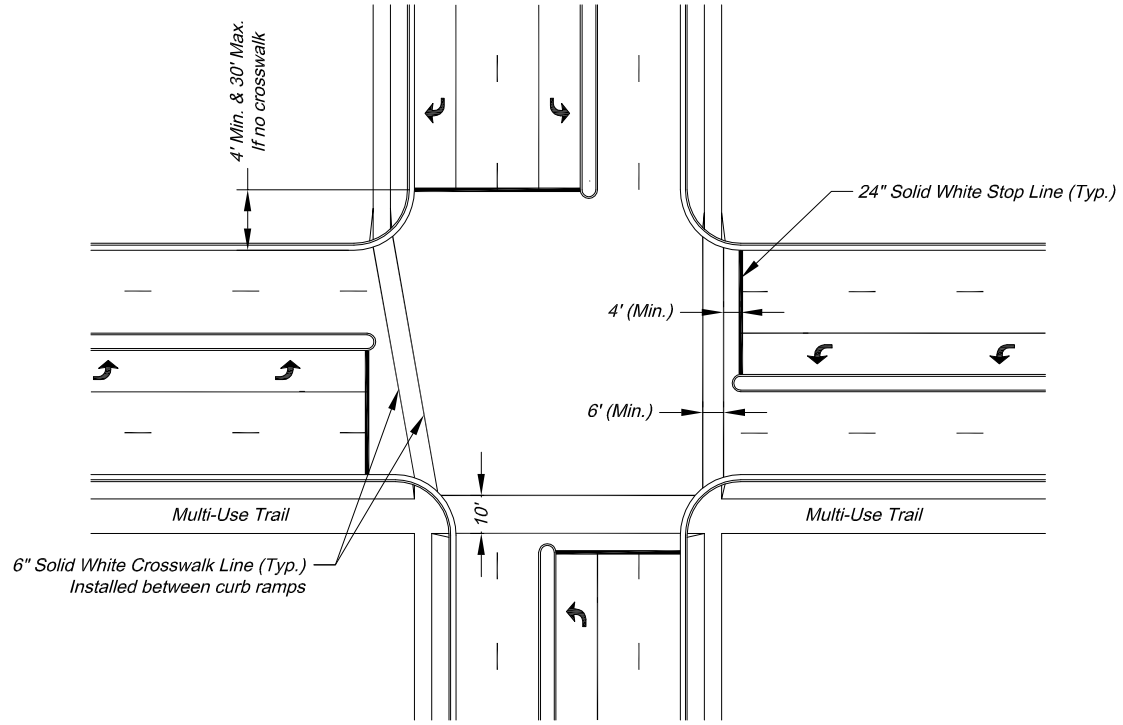

TYPICAL INTERSECTION MARKINGS

NOTES:
1. Transverse crosswalk lines shall be installed such that the distance between lines is at least 6 or 10 feet.
2. Stop lines are required at signalized intersections, on multi-lane stop controlled approaches, or in front of crosswalks at controlled intersections.

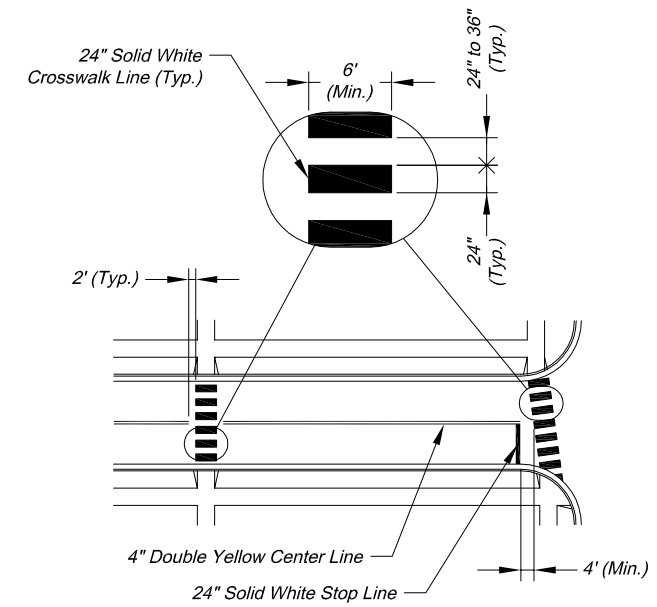

TYPICAL MIDBLOCK OR SCHOOL CROSS WALK

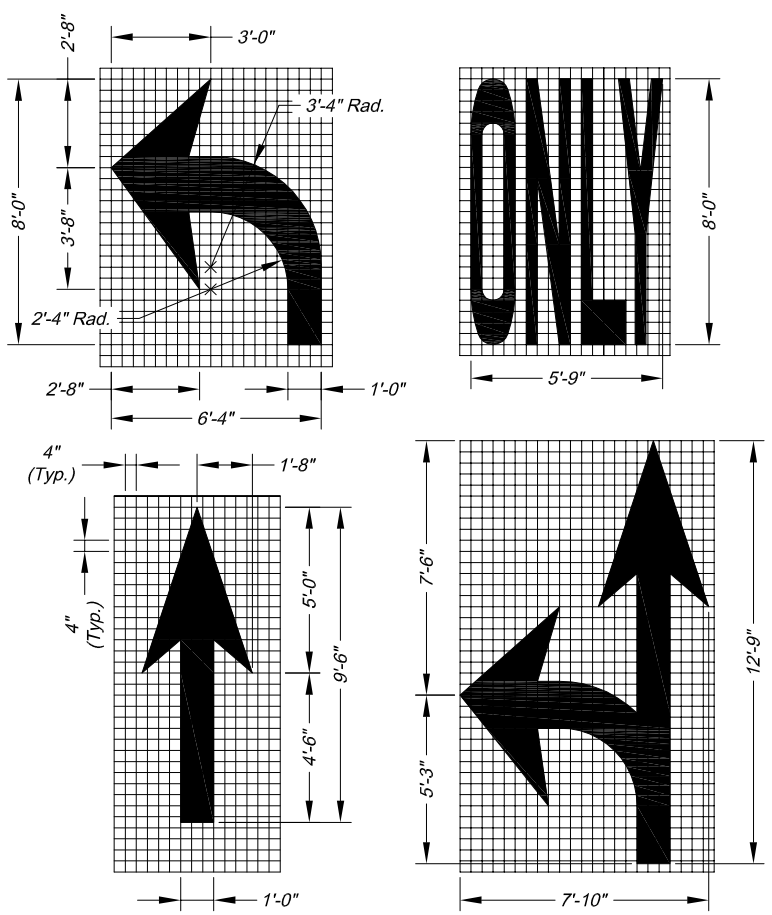

ARROW AND SYMBOL DETAILS

NOTES:
1. All arrow and symbol markings shall be white, and shall be centered in their respective traffic lanes.
2. Right-turn and combination right-turn/straight arrows are reverse of arrows shown.

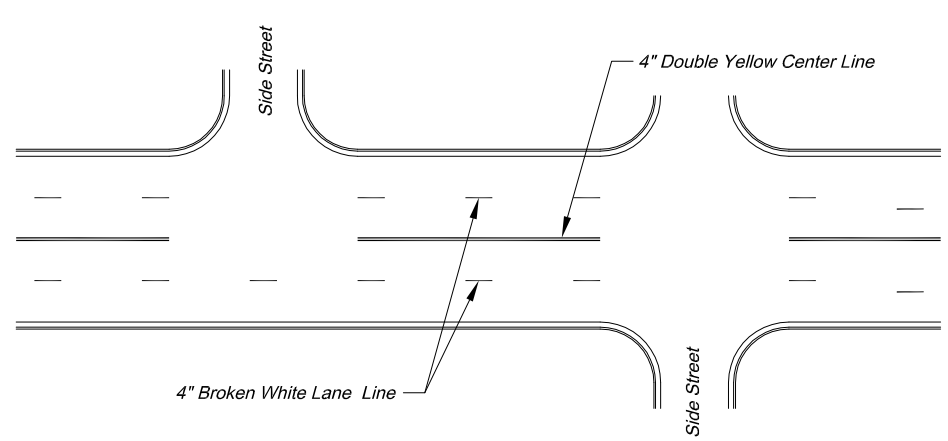

TYPICAL MARKINGS FOR FOUR-LANE UNDIVIDED ROADWAY

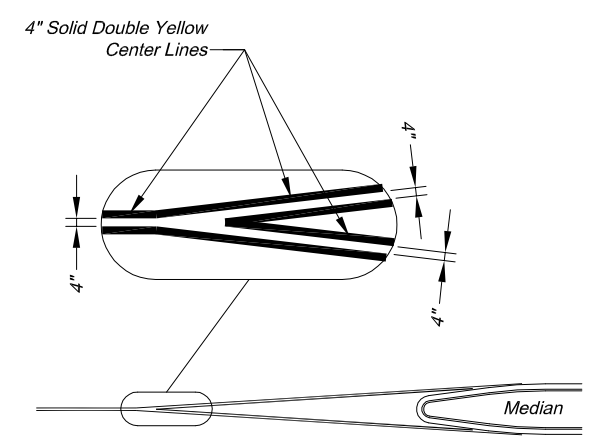

TYPICAL MEDIAN NOSE CENTER LINE DETAIL

PAVEMENT MARKING GENERAL NOTES:
1. All pavement markings shall be in accordance with the latest edition of the Manual on Uniform Traffic Control Devices (MUTCD).
2. All words and symbols shall conform to the latest edition of Standard Alphabets for Highway Signs and Pavement Markings printed by the U.S. Department of Transportation, Federal Highway Administration.
3. Pavement markings, either temporary or permanent are required at all times if the roadway is open to traffic.
4. All pavement markings that conflict with the desired markings shall be completely removed. Removals shall not leave the road surface scarred with an image that misleads traffic. Any excess damage or scarring of pavement shall be repaired at the Contractor's expense.
5. The proposed permanent markings shall be laid out by the Contractor in advance of the marking installation. Markings shall not be applied until the layout has been approved by the City Traffic Engineer.
6. Center lines shall be marked on all undivided arterial streets, and any other undivided street with more than two lanes and/or a speed limit of 30 mph or more.
7. Edge lines shall be marked on all non-curbed streets.

CITY OF LEE'S SUMMIT
PUBLIC WORKS DEPARTMENT
ENGINEERING DIVISION
220 SE GREEN STREET
LEE'S SUMMIT, MISSOURI 64063
PHONE: (816) 969-1800 FAX: (816) 969-1809

Project:

ROADWAY MARKING DETAILS

Sheet Name: STANDARD DRAWING PM-1

Drawn By: AS
Checked By: JW
Date: 09/09/2009
Project#

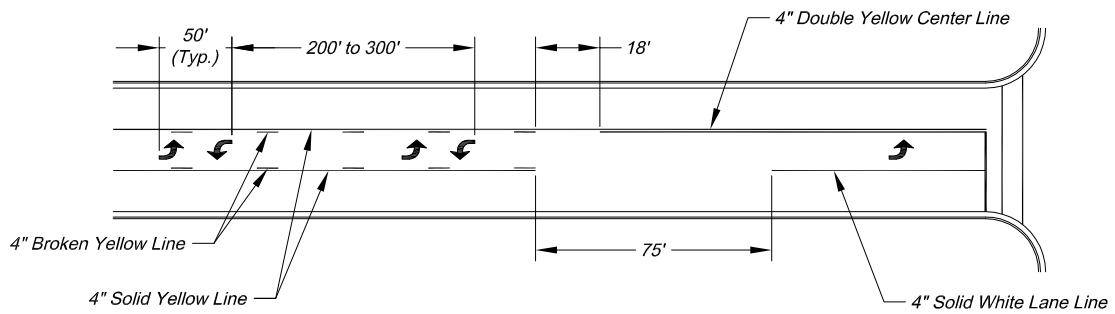

TYPICAL MARKINGS FOR TWO-WAY LEFT-TURN LANE

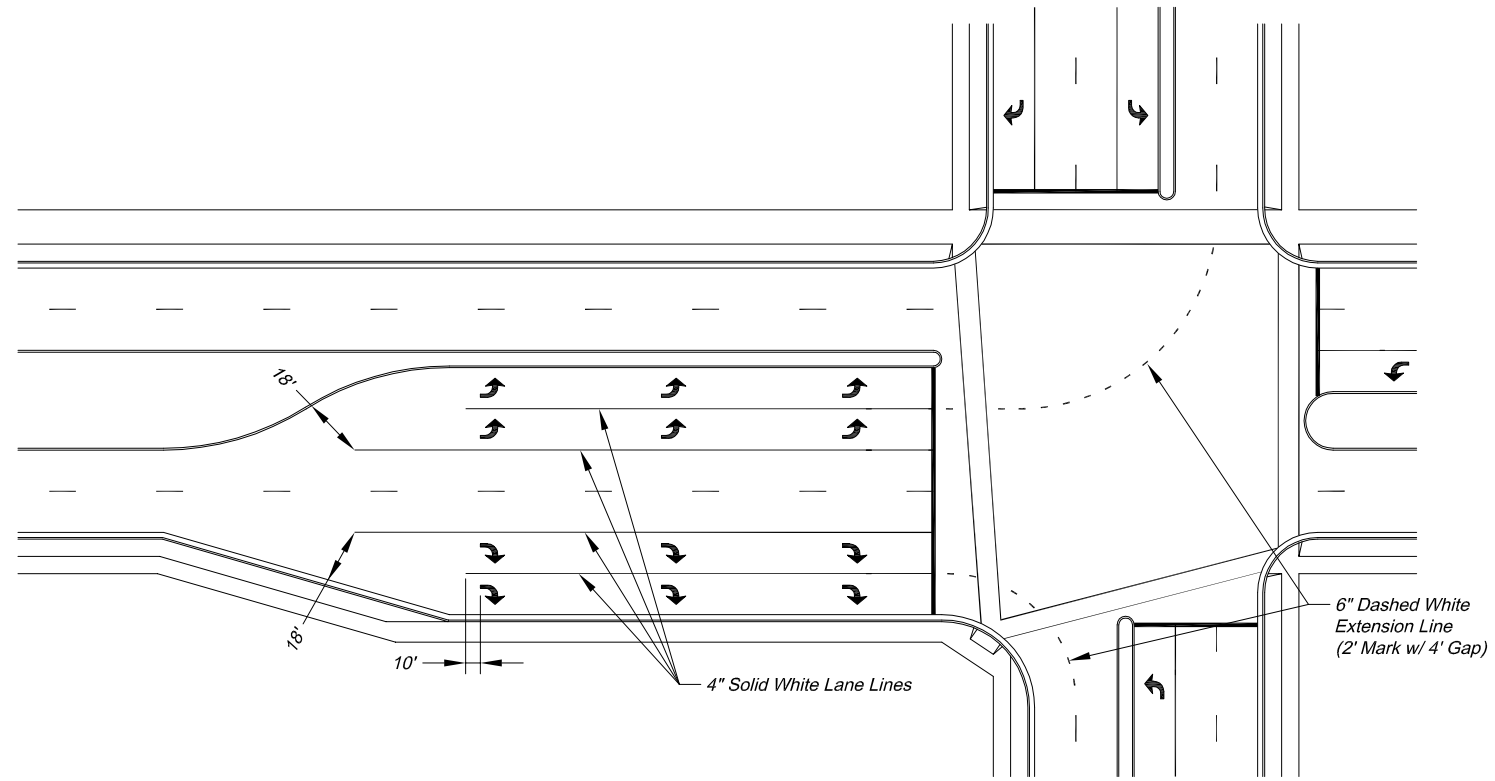

TYPICAL DUAL TURN LANE MARKINGS

NOTE:
1. Dashed extension lines shall not extend through crosswalks.

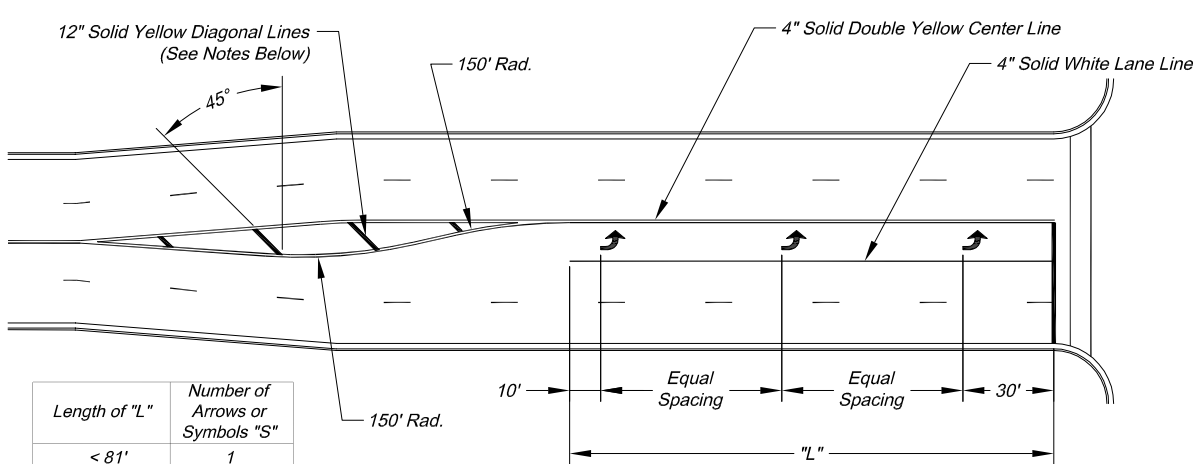

Length of "L"	Number of Arrows or Symbols "S"
< 81'	1
81' - 120'	2
121' - 200'	3
201' - 280'	4
281' - 360'	5
361' - 440'	6

TYPICAL TURN LANE MARKINGS

NOTES:
1. Diagonal lines are required between centerlines if the width of the area between the center lines is greater than 12' and/or the length of the area between center lines is greater than 250'.
2. Diagonal lines should be spaced at 5' increments, equal to the posted speed limit.
3. Equal Spacing is calculated as (L - 40) / (S - 1).
4. When a through lane of traffic terminates as a mandatory turn lane, Arrow and "ONLY" symbols should be marked in the turn lane, in alternating order. The first and last symbols should be Arrows.

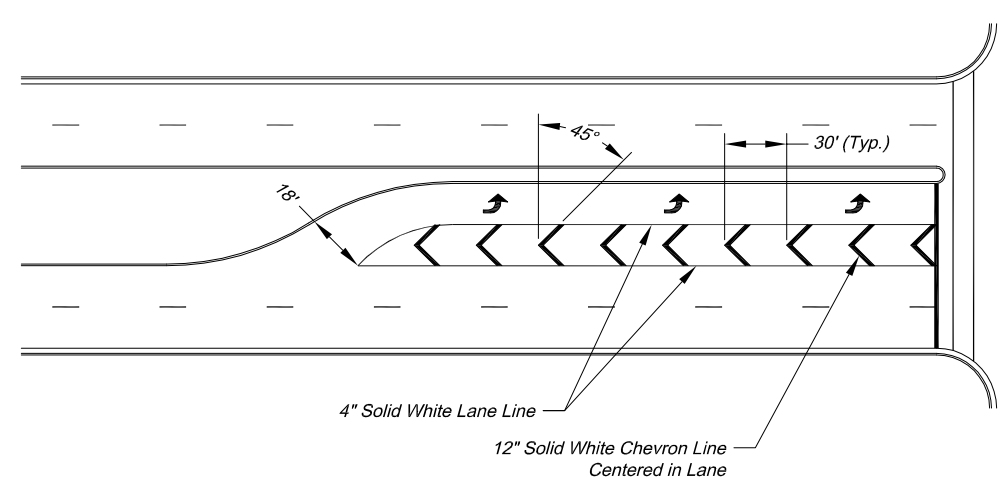

TYPICAL STRIPED OUT TURN LANE MARKINGS

CITY OF LEE'S SUMMIT
PUBLIC WORKS DEPARTMENT
ENGINEERING DIVISION
220 SE GREEN STREET
LEE'S SUMMIT, MISSOURI 64063
PHONE: (816) 969-1800 FAX: (816) 969-1809

Project:

INTERSECTION MARKING DETAILS

Sheet Name: STANDARD DRAWING PM-2

Drawn By: AS
Checked By: JW
Date: 09/09/2009
Project#

STREET LIGHT POLE, BRACKET ARM, AND BREAK-AWAY BASE

POLE TYPE	MOUNTING HEIGHT (A)	BRACKET ARMS LENGTH (B) ARM 1	BRACKET ARMS LENGTH (B) ARM 2	POLE SHAFT BASE O.D.	POLE SHAFT TOP O.D.	POLE SHAFT MIN. WALL THICKNESS	POLE SHAFT SHAFT LENGTH (C)	SHOE BASE BOLT CIRCLE (BC)	ANCHOR BOLTS DIAMETER	ANCHOR BOLTS LENGTH	ANCHOR BOLTS HOOK
P14	14'	-	-	6"	3"	0.156"	14'-0"	9.5"	0.75" 10NC	25"	3"
P30S	30'	6' or 10'	-	8"	6"	0.188"	26'-6" ±2"	11.0"	1.00" 8NC	36"	4"
P30D	30'	6' or 10'	6' or 10'	8"	6"	0.219"	26'-6" ±2"	11.0"	1.00" 8NC	36"	4"
P40S	40'	6', 10' or 15'	-	8"	6"	0.219"	36'-6" ±2"	11.5"	1.00" 8NC	36"	4"
P40D	40'	6', 10' or 15'	6', 10' or 15'	10"	6"	0.219"	36'-6" ±2"	14.5"	1.00" 8NC	48"	4"

NOTES:
1. All poles, arms, and miscellaneous equipment shall conform to these details and as specified by the latest city standard specifications.
2. Pole shaft shall have a satin ground finish.
3. All hardware (bolts, nuts, washers but not including anchor bolts) not otherwise specifically designated in the specifications or details shall be 300-series stainless steel conforming to ASTM A193 or A194.
4. Anchor bolts shall be used with concrete bases. Anchor bolts shall be steel with 50,000 PSI minimum yield; top 10" min. galvanized; including 8 nuts and 8 flat washers galvanized to ASTM A153 standards. Galvanized hex head bolts (see pole foundation sheet) shall be used with screw-in anchor bases. 4 bolts, 4 nuts and 8 flat washers to provided with each anchor.
5. All welding is to be done with 4043 weld wire. All arms and shafts are to be heat-treated to T6 temper after welding.
6. Anchor bolts shall project above the concrete base as per manufacturer's recommended practices, 2 ½ " to 3".
7. The aluminum street light pole assembly, including anchorage and luminaire, shall comply with the latest city standard specifications and the American Association of State Highway and Transportation Officials (AASHTO) load wind loading.
8. All poles and arms shall be clearly identified by the manufacturer's name, abbreviation, or symbol engraved on the shaft, shoe base, hand hole, or other means such as to be readily visible after installation.

MATERIAL DATA

COMPONENT	ALUMINUM ALLOY DESIGNATION	SPECIFICATION
Shoe Base	356-T6, Cast	**ASTM B26 or B108**
Breakaway Base	356-T6, Cast	ASTM B108
Bolt Covers	356 or 360, Cast	ASTM B26 or B108
Pole Shaft	6063-T6, Extruded	ASTM B221 or B241
Ground Lug	6061-T5 or 6063-T6, Plate	ASTM B221
Reinforced Handhole Frame	356-T6 or 6061-T6	ASTM B26, B108 or B221
Handhole Cover	6063-T6	ASTM B209, B221 or B241
Bracket Arm & Tubing Pipes	6063-T6	ASTM B221, B241 or B249
Bracket Arm Mounting Plates	6061-T6 or 6063-T6 Extruded	ASTM B221
Bracket Arm Strut & Arm Connector	6061-T6 or 6063-T6 Extruded	ASTM B221, B241 or B249
Pole Cap	356, Cast	ASTM B26 or B108
Anchor Bolts	N/A	Galvanized per ASTM A153

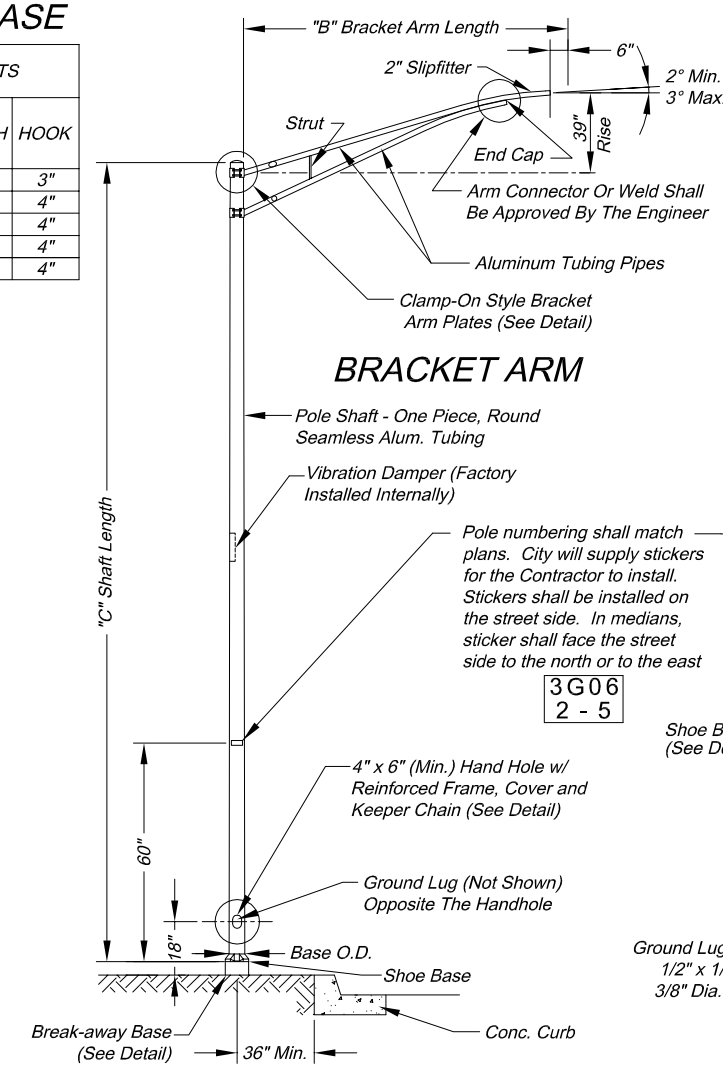

BRACKET ARM

POLE ELEVATION

(See tables for dimensions and materials)

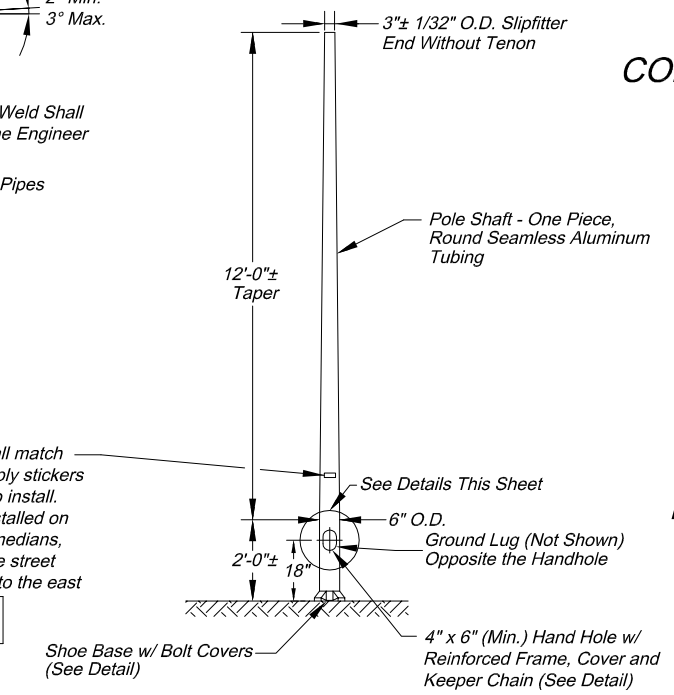

PEDESTAL POLE ELEVATION

(See tables for dimensions and materials)

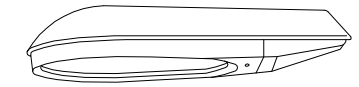

COBRA HEAD STYLE LUMINAIRE

150, 250, or 400 Watt HPS

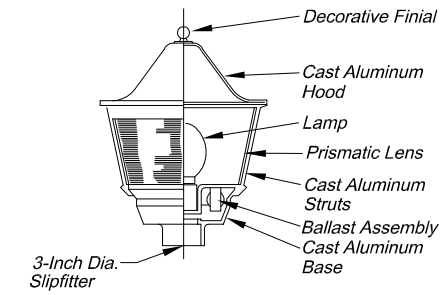

POST TOP LUMINAIRE

150 Watt HPS

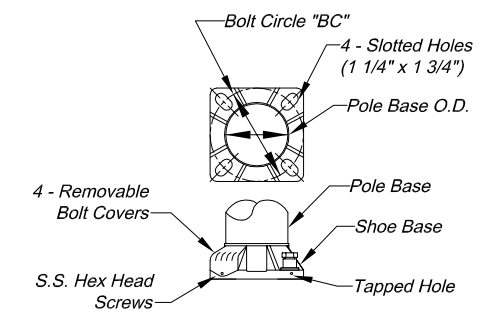

SHOE BASE

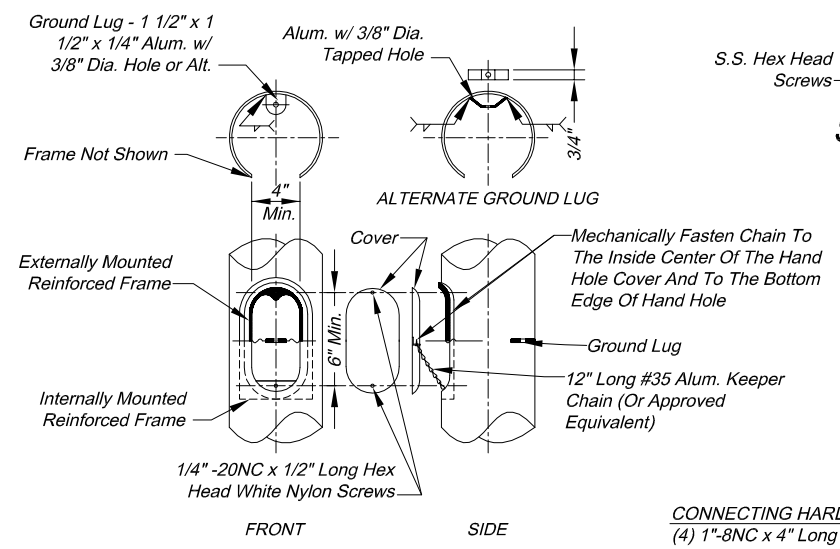

HAND HOLE

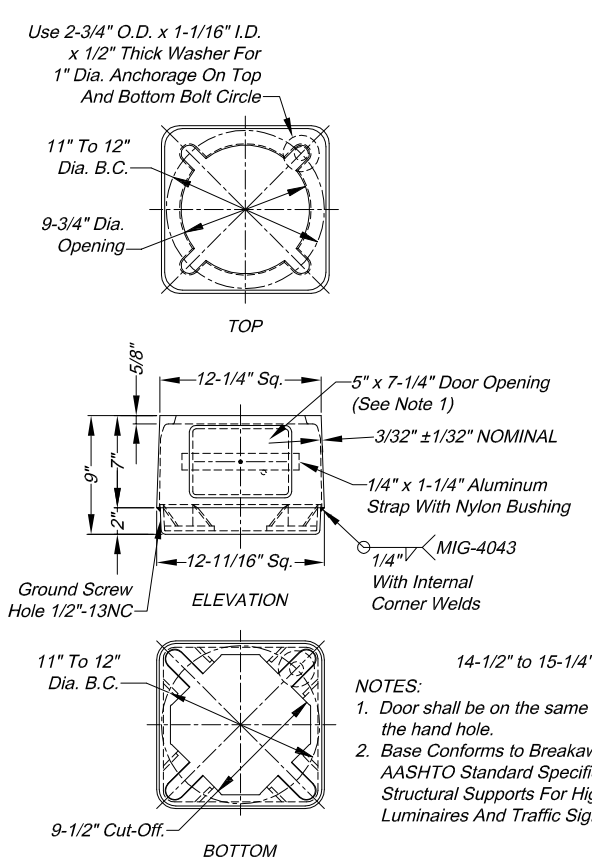

NOTES:
1. Door shall be on the same side of the pole as the hand hole.
2. Base Conforms to Breakaway Criteria Of AASHTO Standard Specifications For Structural Supports For Highway Signs, Luminaires And Traffic Signals (1994).

11" BREAK-AWAY BASE

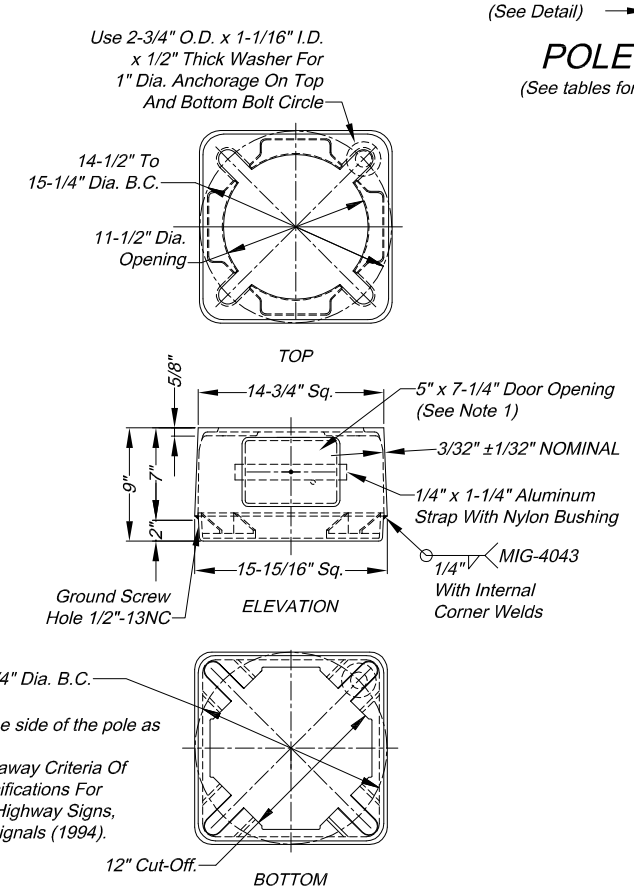

15" BREAK-AWAY BASE

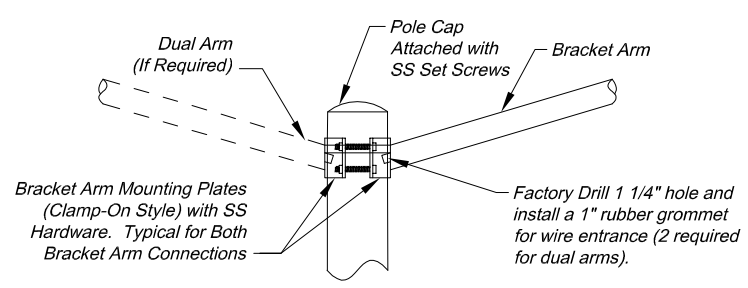

BRACKET ARM MOUNTING

CONNECTING HARDWARE
(4) 1"-8NC x 4" Long Galv. Hex Head Bolt SAE Gr. 5
(8) 1/2" Galv. Washer 2-3/4" O.D.
(4) 1" Galv. Hex. Nut
(4) 1" Galv. Flat Washer
(4) 1" Lock Washer

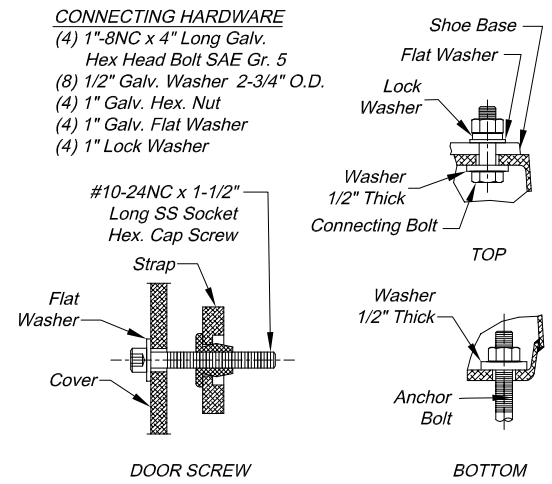

BREAK-AWAY BASE ANCHORAGE

CITY OF LEE'S SUMMIT
PUBLIC WORKS DEPARTMENT
ENGINEERING DIVISION
220 SE GREEN STREET
LEE'S SUMMIT, MISSOURI 64063
PHONE: (816) 969-1800 FAX: (816) 969-1809

Project:

POLE AND LUMINAIRE DETAILS

Sheet Name: STANDARD DRAWING SL-1

Drawn By: JH
Checked By: JW
Date: 08/21/2009

POLE TYPE	BRACKET ARM	DEPTH (A)	BOLT CIRCLE (BC)
P14	---	48"	9.5"
P30S or P30D	Single or Dual	72"	11.0"
P40S	Single	94"	11.5"
P40D	Dual	94"	14.5"

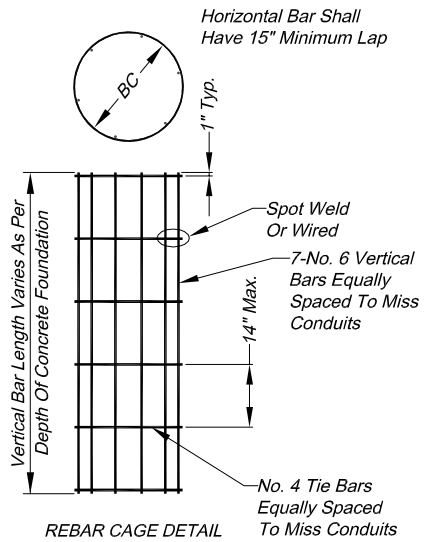

REBAR CAGE DETAIL

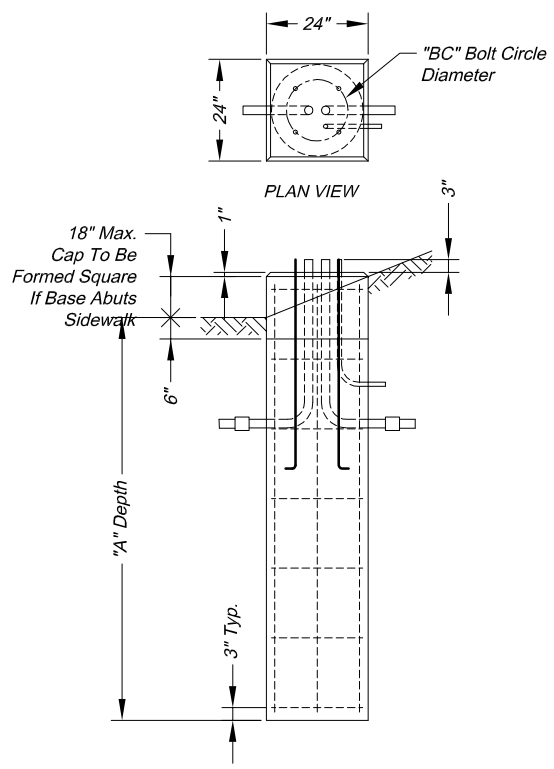

RAISED POLE BASE ELEVATION

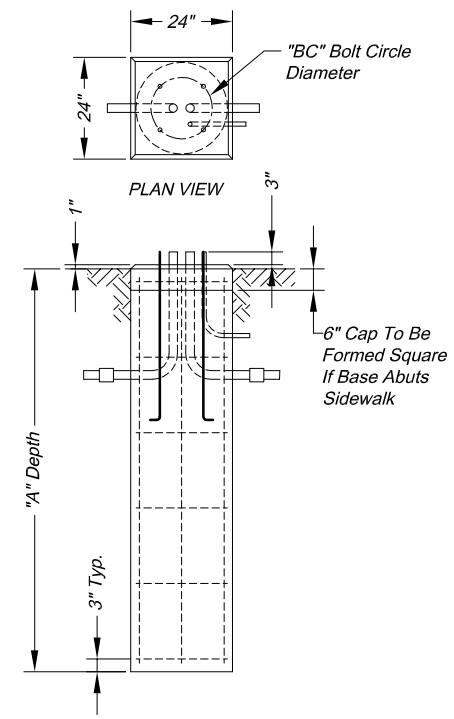

AT-GRADE POLE BASE ELEVATION

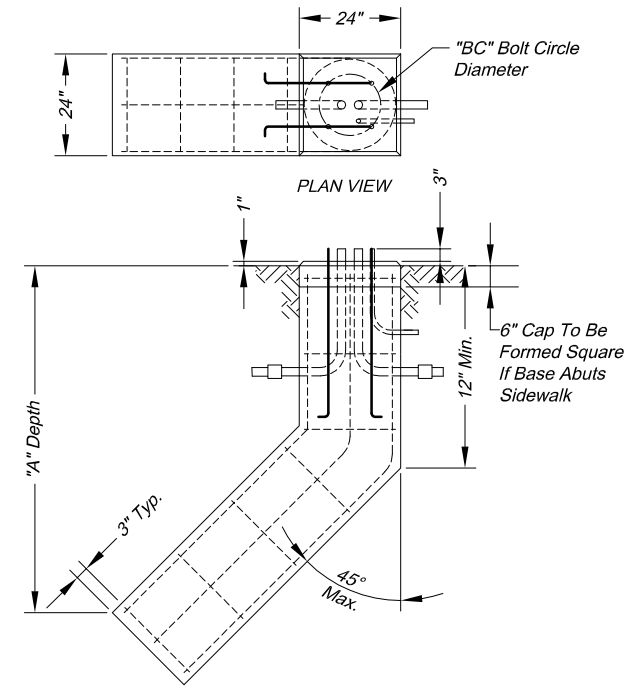

OFFSET CONCRETE BASE

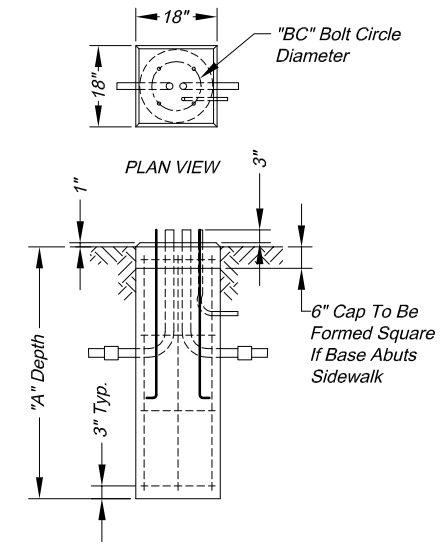

PEDESTAL POLE BASE

CONCRETE BASE DETAILS

BASE TYPE	POLE TYPE	MINIMUM TORQUE RATING (lbs. ft.)	MAXMUM TORQUE RATING (lbs. ft.)	SHAFT DIA. (A)	SHAFT LENGTH (B)	HELIX DIA. (C)	PLATE SIZE (D)	PLATE THICKNESS (E)	BOLT CIRCLE (BC)	SLOT LOCATION (G)
B14	P14	2,000	15,000	6"	48"	12"	10"	0.75"	9.5"	12"
B30	P30S & P30D	2,000	15,000	6"	60"	12"	12"	1.0"	11.0"	18"
B40S	P40S	2,000	20,000	8"	60"	14"	12"	1.0"	11.5"	18"
B40D	P40D	2,000	20,000	8"	60"	14"	15"	1.25"	14.5"	18"

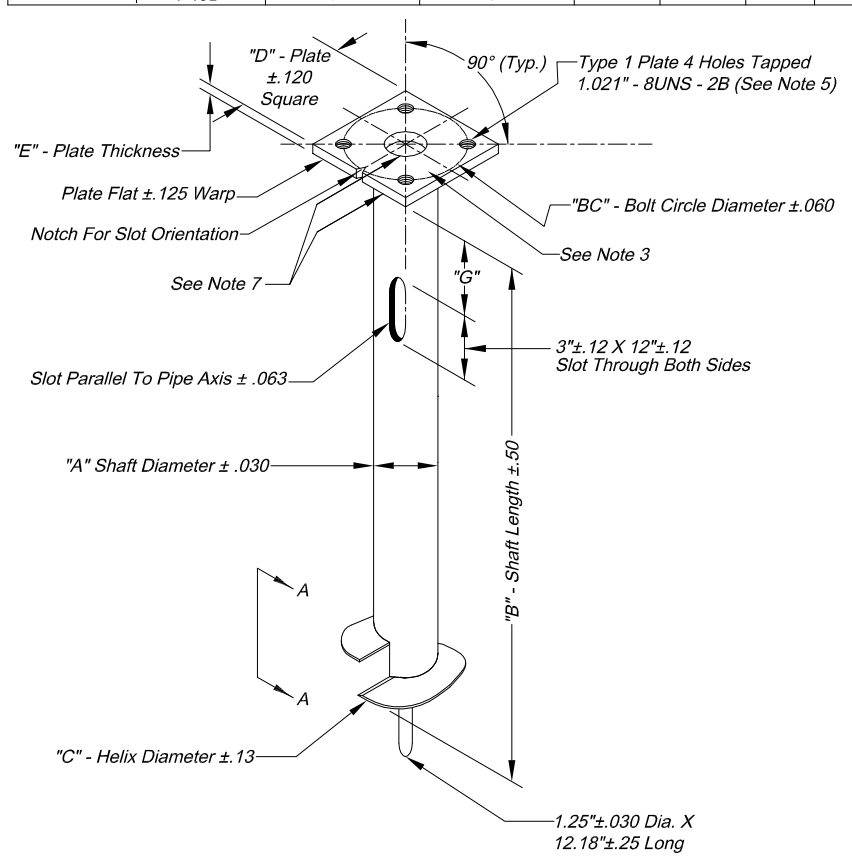

SCREW-IN ANCHOR BASE DETAILS

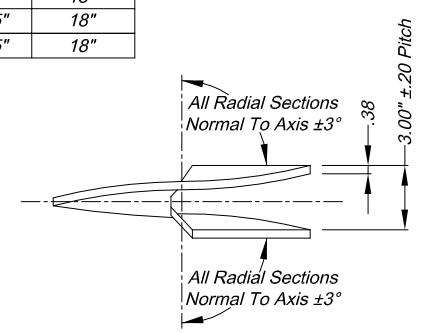

Helix Must Be Formed By Matching Metal Die

SECTION A-A

NOTES:

1. Finish: Hot dip galvanize per ASTM-A153 (latest revision).
2. Baseplate to be perpendicular to shaft axis (±1°) and hole and concentric (±.188 I.D. Fim) to shaft axis.
3. All bases shall be identified by the manufacturer's initials and the anchor type (1 or 2) permanently stamped into the top plate with 1/2" letters., the Julian date of manufacture shall be permanently stamped in 1/4" numerals.
4. Pilot point and shaft axes to be concentric (±.125 Fim) and in line (±2°).
5. Tap 1" holes on the specified bolt circle perpendicular to the baseplate. Clean and chase the threads after hot-dip galvanizing so that a bolt may be installed.
6. Preheat (room temperature 70°F), tumbleblast, handgrind, and clean baseplate, helix, and core on all weld areas.
7. Flame cut irregularities permissible:
   (1) Valleys not to exceed 3/32 in. below nominal surface level.
   (2) Peaks or positive irregularities not to exceed 1/32 in. above nominal surface level or intersections of nominal surfaces.
8. Manufacturer to have in effect industry recognized written quality control for all materials and manufacturing processes.
9. All material is to be new, unused and mill traceable meeting the following specifications:
   - Baseplate: ASTM A36-(latest revision) hot rolled steel plate (conform to AASHTO technical bul. #270).
   - Shaft: Steel pipe piles, seemless or straight welded, grade 2 per ASTM A252. Alternate material: pipe type E or S, grade B per ASTM A53.
   - Helix: ASTM A635-(latest revision) hot rolled steel plate
   - Pilot Point: ASTM A575-(latest revision) hot rolled steel
   - Bolt: ASTM A325 or Grade 5 SAE J429 - 1" diameter hot dip galvanized hex head bolt. Bolt shall include one each lock and flat washer.
10. The design and performance integrity of the foundation shall be verified by full-scale tests by qualified engineers independent of the manufacturer. Certified test reports shall be provided upon request.
11. Flame cut notch or projection will be on the base plate to indicate slot orientation.

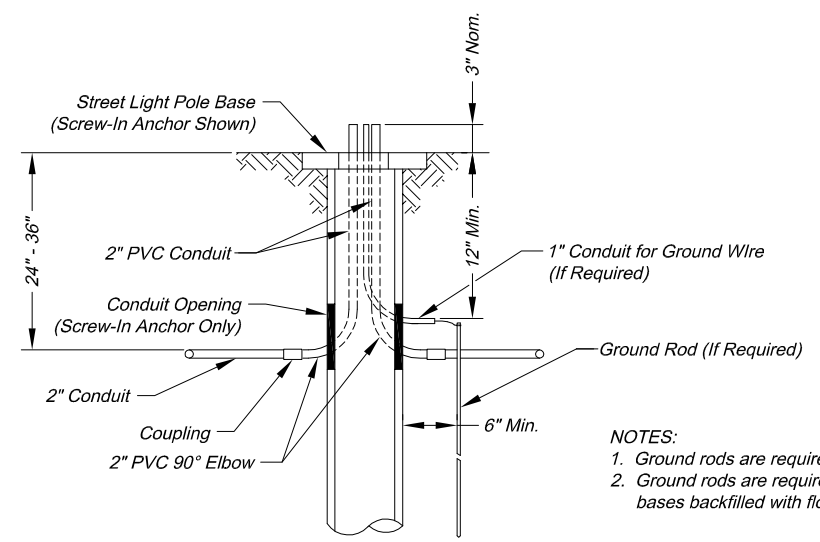

NOTES:

1. Ground rods are required for all concrete bases.
2. Ground rods are required for screw-in anchor bases backfilled with flowable fill or concrete.

CONDUIT ENTRANCE AND GROUNDING

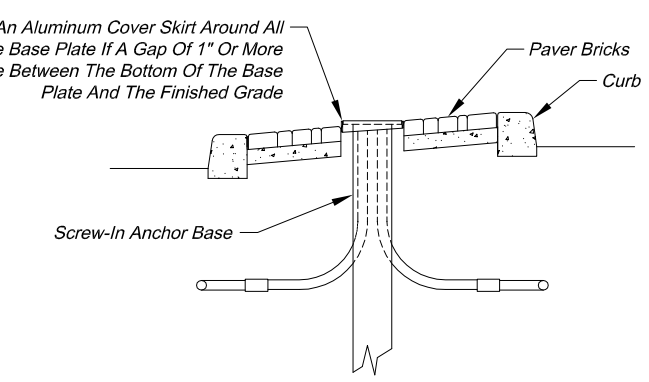

COVERSKIRT REQUIREMENTS

CITY OF LEE'S SUMMIT
PUBLIC WORKS DEPARTMENT
ENGINEERING DIVISION
220 SE GREEN STREET
LEE'S SUMMIT, MISSOURI 64063
PHONE: (816) 969-1800 FAX: (816) 969-1809

Project:

POLE BASE DETAILS

Sheet Name: STANDARD DRAWING SL-2

Drawn By: JH
Checked By: JW
Date: 08/21/2009

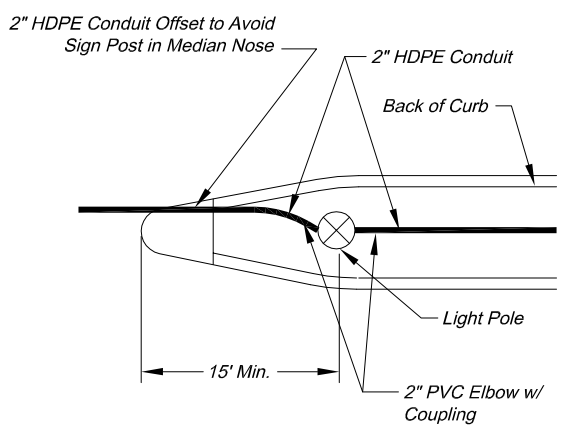

STREET LIGHT POLE IN MEDIAN

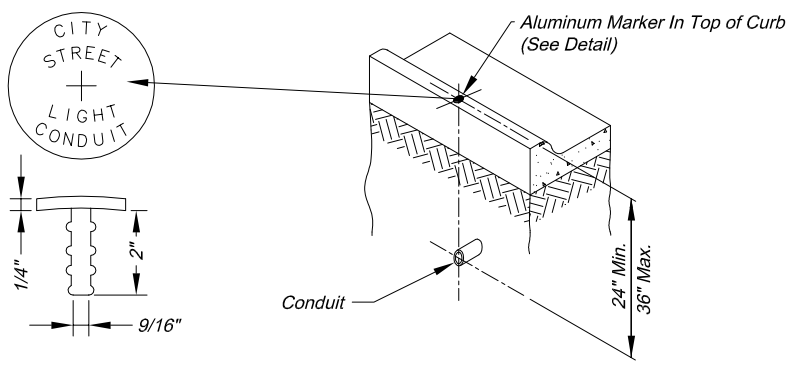

CONDUIT MARKING DETAIL

NOTES:
1. An aluminum marker shall be placed in the top of the curb directly over the conduit.
2. Markers shall be installed by drilling the curb and expoxying the marker in place. If installed in a sidewalk or curb ramp, the top of the marker shall be flush with the concrete surface.
3. No direct payment shall be made for conduit markers; they are subsidiary to the installation of conduit.

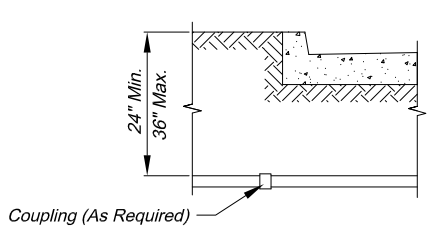

BORED CONDUIT

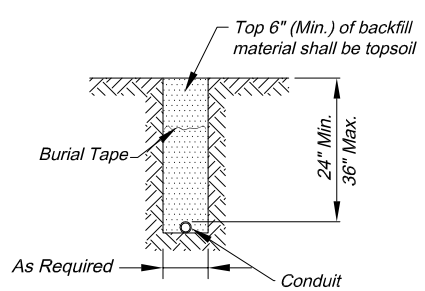

TRENCHED OR PLOWED CONDUIT

CONDUIT LOCATIONS

NOTES:
1. Backfill under paved surfaces shall be flowable fill.
2. The conduit shall not be covered unless inspected and approved by the City Engineer, so as to ensure proper depth, correct conduit material, and proper conduit end treatment.

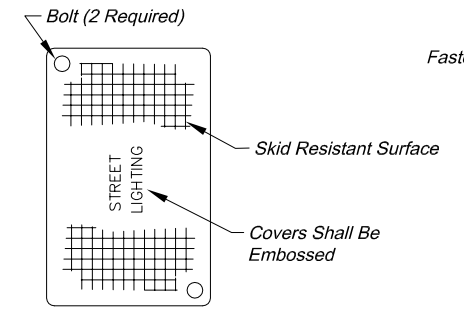

BOX COVER

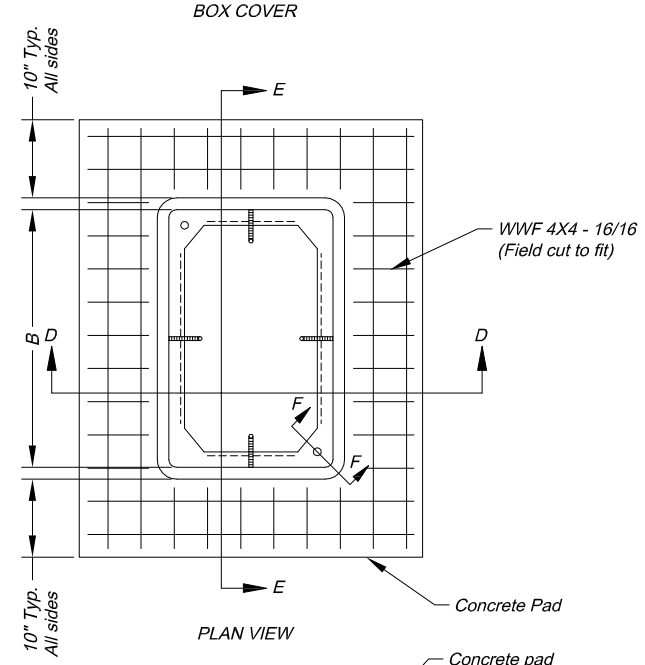

PLAN VIEW

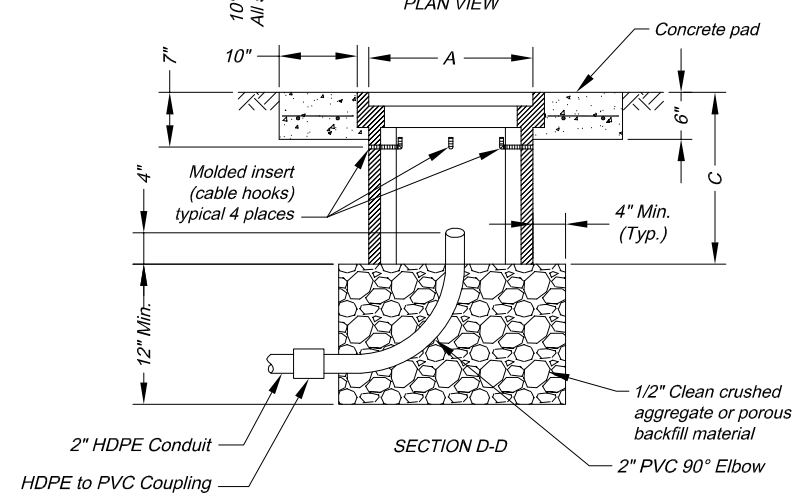

SECTION D-D

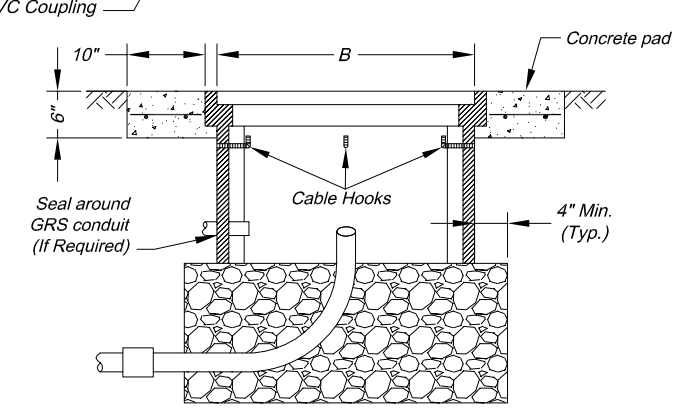

SECTION E-E

PULL OR JUNCTION BOX DETAILS

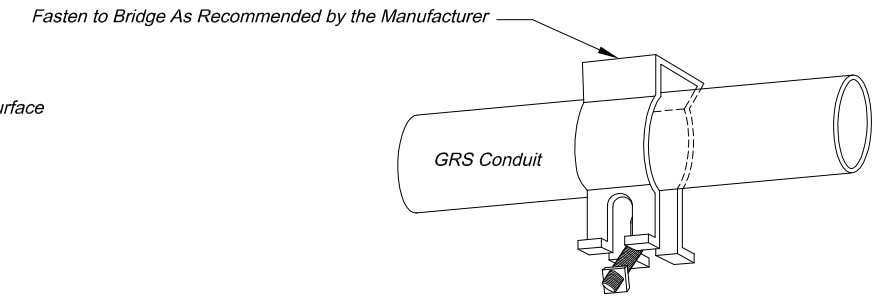

CONDUIT HANGER

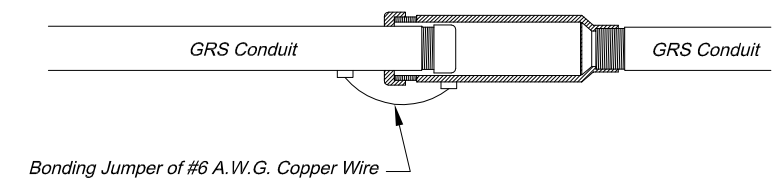

EXPANSION FITTING

GRS CONDUIT DETAILS

NOTES:
1. All conduits installed above ground shall be GRS.
2. Conduit attached to bridges shall have expansion fittings installed at each end of the bridge and at each expansion joint on the bridge.
3. All GRS conduits shall be electrically bonded by a grounding bushing and ground wire as detailed.
4. Install the conduit and connector assembly to permit a 1/2" minimum longitudinal travel in either direction.

Number of Entering/Exiting Conduits	Box Type	Minimum Box Dimensions		
		A	B	C
1 - 2	Type 1 Junction Box	12"	12"	12"
3 - 4	Type 2 Junction Box	12"	18"	12"
> 4	Class 1 Pull Box	17"	30"	22"

All dimensions shown are nominal

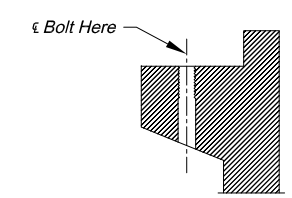

SECTION F-F

NOTES:
1. Lift opening required on all covers.
2. Preformed box walls may be either flared or vertical. The bottom of boxes shall be open to below.
3. If an extension is used with a preformed box, the lip of the extension may be interior or exterior. The extension shall be compatible and from the same manufacturer.
4. Cable hooks are to be included with Class 1 Pull Boxes only.
5. A Class 1 Pull Box shall be installed adjacent to each 4-Circuit Power Supply.

CITY OF LEE'S SUMMIT
PUBLIC WORKS DEPARTMENT
ENGINEERING DIVISION
220 SE GREEN STREET
LEE'S SUMMIT, MISSOURI 64063
PHONE: (816) 969-1800 FAX: (816) 969-1809

Project:

BOX AND CONDUIT DETAILS

Sheet Name: STANDARD DRAWING SL-3

Drawn By: JH
Checked By: JW
Date: 08/21/2009

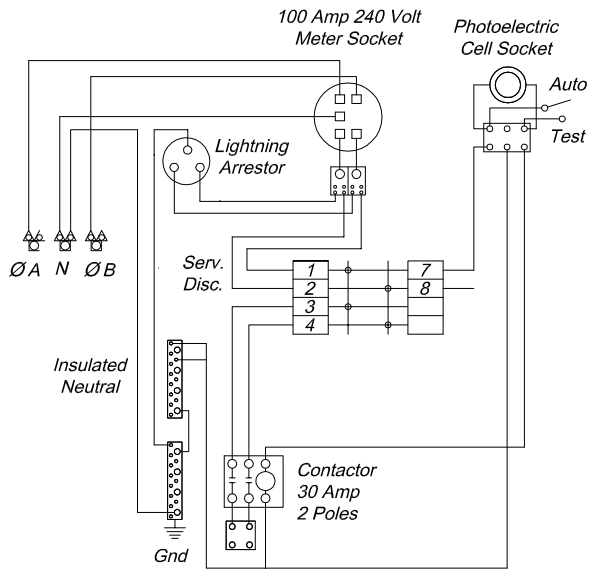

WIRING SCHEMATIC

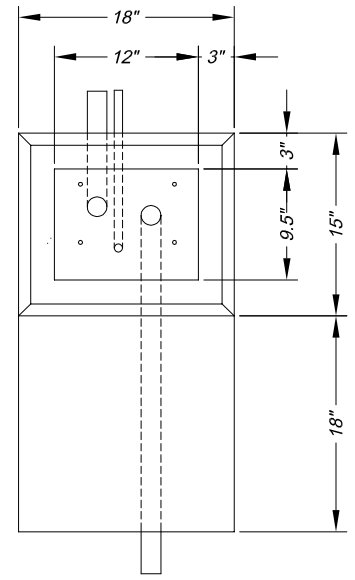

PLAN VIEW

FUSED CONTACTORS
ARE NOT PERMITTED

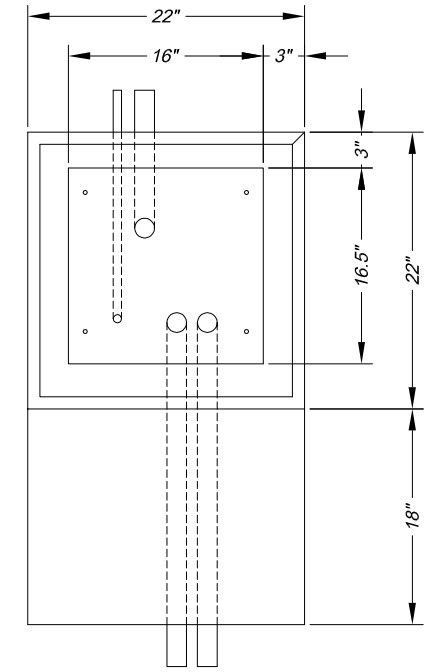

PLAN VIEW

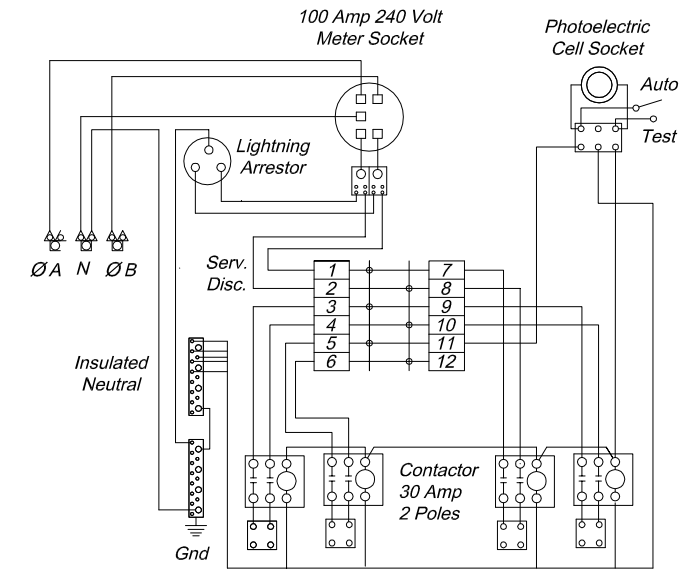

WIRING SCHEMATIC

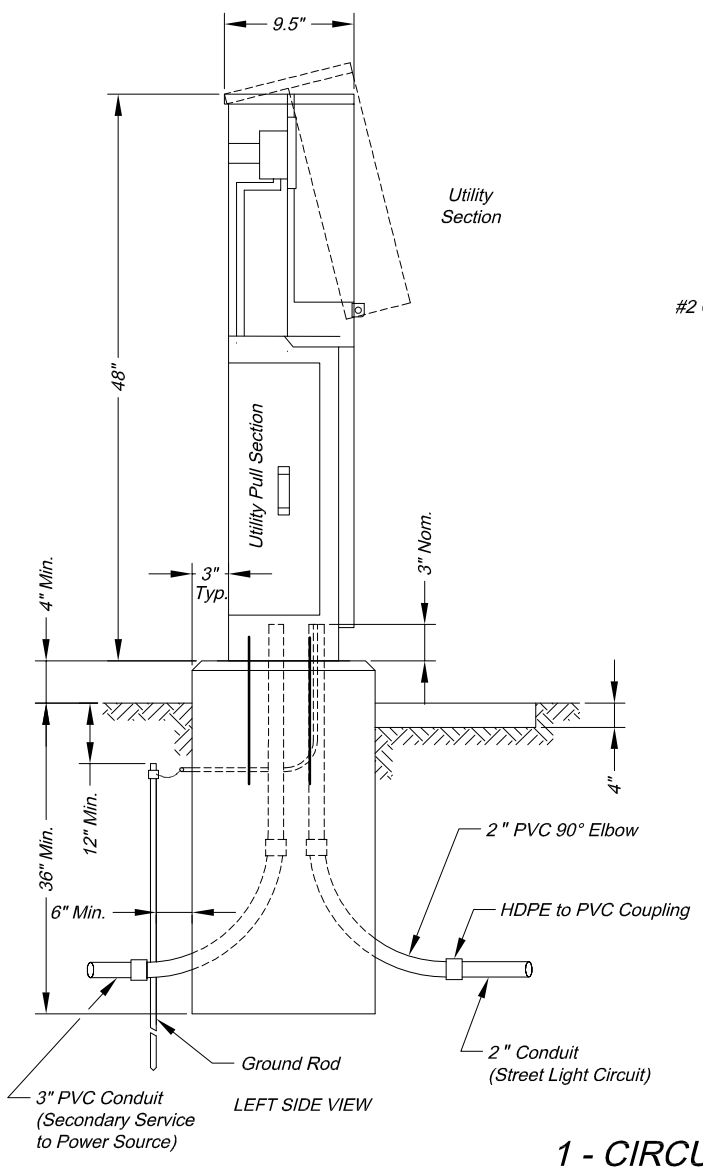

LEFT SIDE VIEW

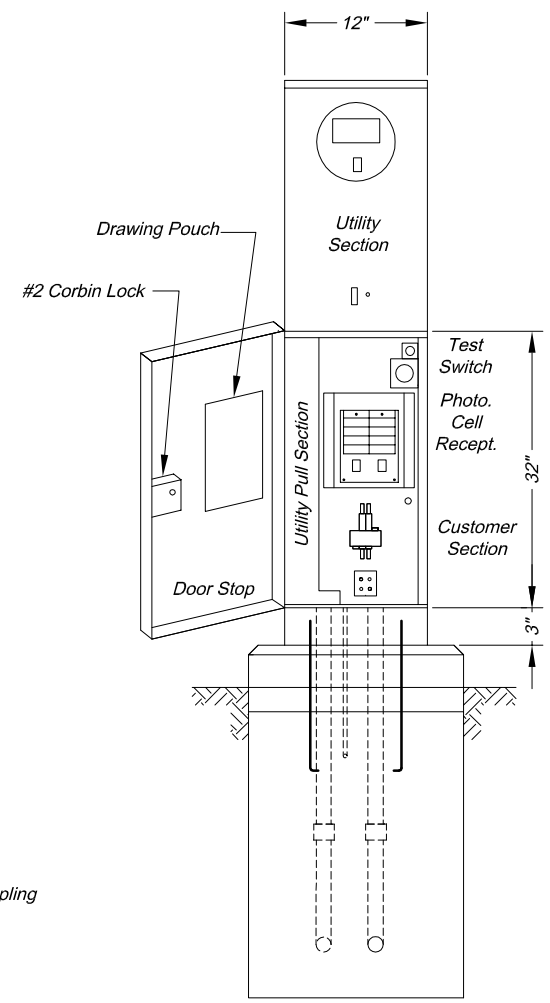

FRONT VIEW

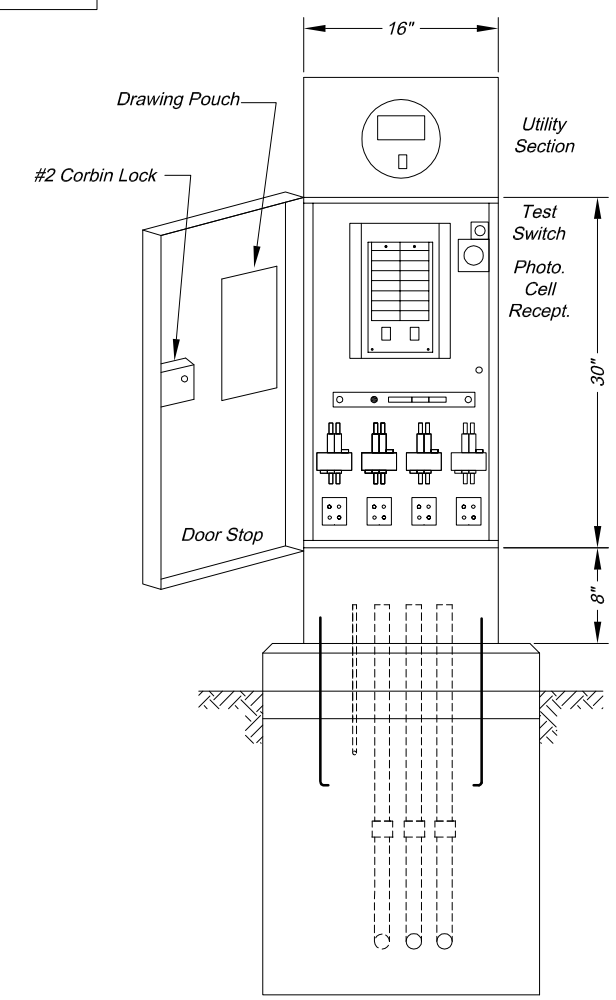

FRONT VIEW

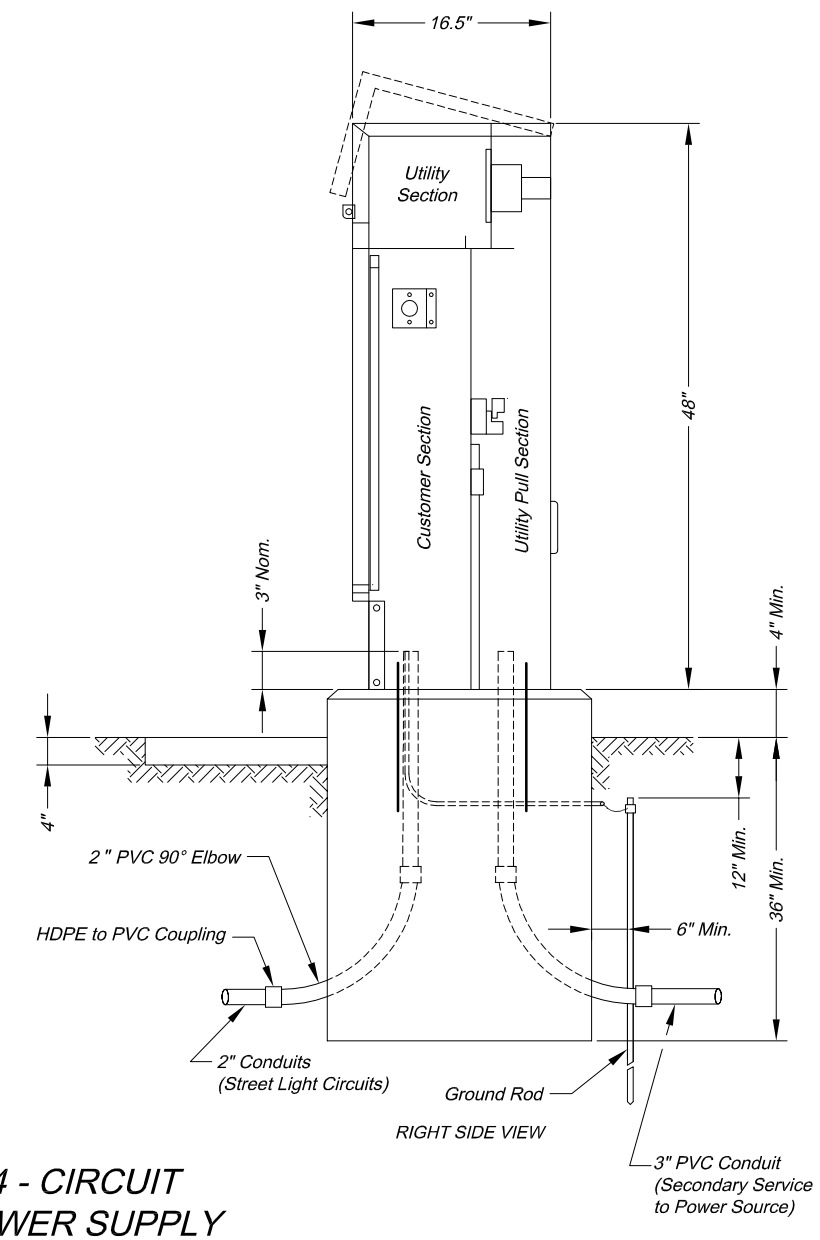

RIGHT SIDE VIEW

1 - CIRCUIT POWER SUPPLY

NOTES:

1. Photoelectric cell should be oriented to the north or east.
2. Seal around joint between cabinet and base with lifetime silicone caulk.
3. All exposed edges of the base should have a 1" chamfer
4. If base is adjacent to a traffic signal controller, raised portion of base (above finished grade) should be constructed to the same height as the signal controller base.
5. The street address with the power supply number below it should be labeled on the upper portion of the cabinet facing the street. The City will supply stickers for the Contractor to install.

4 - CIRCUIT POWER SUPPLY

CITY OF LEE'S SUMMIT
PUBLIC WORKS DEPARTMENT
ENGINEERING DIVISION
220 SE GREEN STREET
LEE'S SUMMIT, MISSOURI 64063
PHONE: (816) 969-1800 FAX: (816) 969-1809

Project:

POWER SUPPLY DETAILS

Sheet Name: STANDARD DRAWING SL-4

Drawn By: JH
Checked By: JW
Date: 08/21/2009

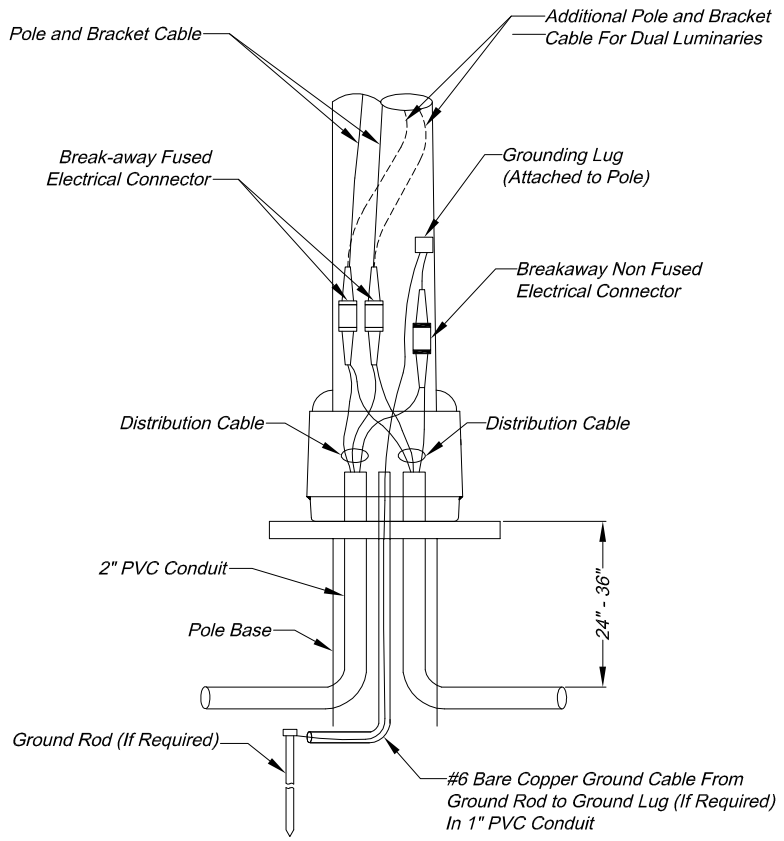

POLE WIRING DETAILS

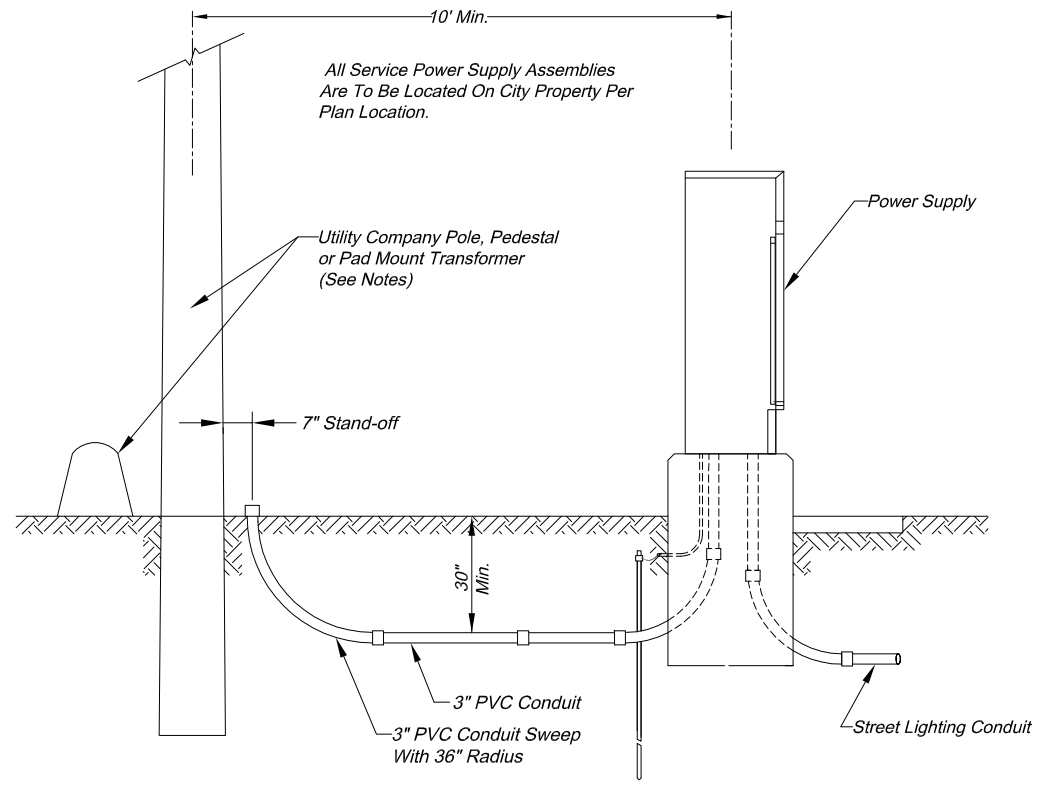

SECONDARY SERVICE CONNECTION DETAILS

NOTES:
1. Contractor shall install a conduit stub 24" to 6" above ground at utility poles. Conduit shall be stubbed to the side of the pole that will allow a direct run up the pole to the transformer without crossing other utility lines or cables. The end of the conduit shall be capped.
2. Contractor shall install conduit in a trench to within 24" of pedestals or pad mount transformers and leave a 36" x 36" x 36" access hole in the ground. Contractor shall keep open trench covered and promptly backfill access hole when service is completed.

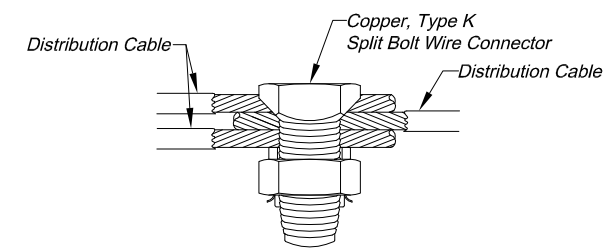

SPLICE KIT DETAILS

NOTES:
1. To be used only in junction or pull boxes where circuits branch or "tee".
2. All splices shall be protected with a resin splice kit (not shown) installed in accordance with the manufacturer's recommendations.

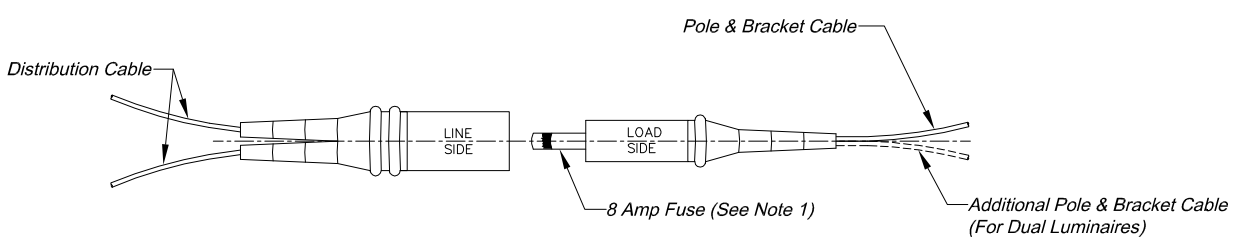

BREAK-AWAY FUSED ELECTRICAL CONNECTORS

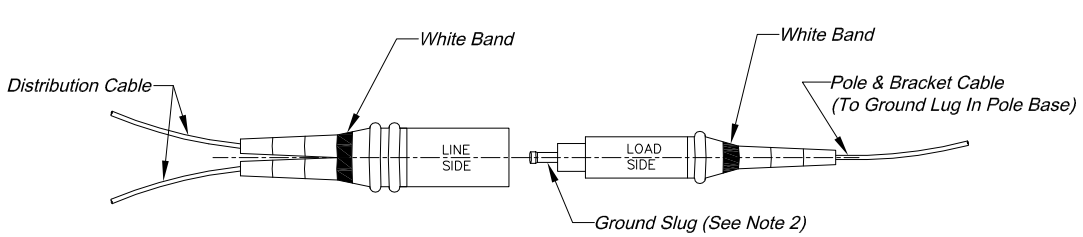

BREAK-AWAY NON FUSED ELECTRICAL CONNECTOR

NOTES:
1. Fuse remains in "Load Side" after break-away.
2. Ground "Slug" remains in "Load Side" after break-way.
3. Connectors shall have set screw type terminals to attach cables.

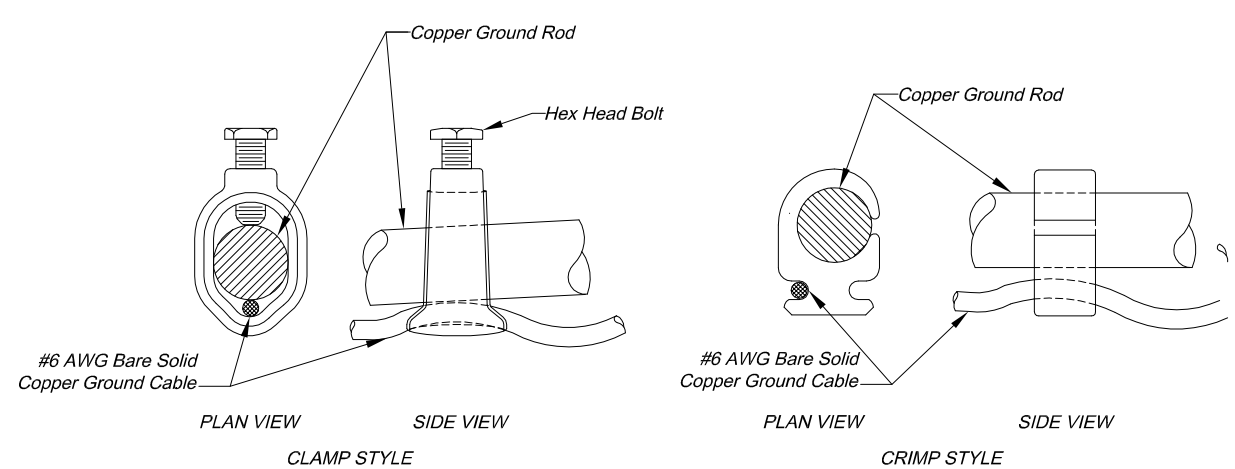

GROUND ROD CONNECTION DETAILS

CITY OF LEE'S SUMMIT
PUBLIC WORKS DEPARTMENT
ENGINEERING DIVISION
220 SE GREEN STREET
LEE'S SUMMIT, MISSOURI 64063
PHONE: (816) 969-1800 FAX: (816) 969-1809

Project:

ELECTRICAL DETAILS

Sheet Name: STANDARD DRAWING SL-5

Drawn By: JH
Checked By: JW
Date: 08/21/2009

CITY OF LEE'S SUMMIT
PUBLIC WORKS DEPARTMENT

APPROVED PRODUCTS LIST FOR WATER UTILITIES

This document is provided as a benefit to contractors and suppliers who are performing work in the City of Lee's Summit. The Approved Products List for Water Utilities shall not be used as a substitute for catalog cuts, certifications or shop drawings. This list is updated periodically. The products indicated on the list are approved, but are subject to final field inspection before acceptance.

Vendors wishing to add a product to the list shall submit a Water Utilities Product Evaluation Form with supporting documentation to the Public Works Engineering Department. Vendors may also submit items, at no cost to the City, for evaluation. The City may test new water and wastewater products. Once a product has been added to the approved products list, minor product changes do not require an evaluation, although the vendor shall submit specification sheets and a sample of the product for the City to inspect. During an initial review, the following will be considered:

- Does the documentation received indicate that the product will perform as stated?
- Does a true need exist for the product in Lee's Summit?
- Will the product be economically competitive?
- Will the product function properly with existing City facilities?
- Will new equipment and new skills be needed to maintain the product?

The vendor supplying the product shall provide specifications and a certification that the product meets and or exceeds City specifications before any testing is performed. Products that are not performing satisfactorily will be removed from the approved products list if the vendor cannot provide timely correction of the problem.

If a vendor is proposing a product that does not meet City specifications, an explanation of why the product meets or exceeds the current specifications must be provided by the vendor in writing. If approved, the product may be tested to determine if the product is satisfactory. If the product is satisfactory, the City will consider a revision to the applicable specifications. Products will not be added to the Approved Products List that do not meet City specifications.

Products not performing as required or not supported by vendors or manufacturers are subject to removal from the list. Grounds for removal of products may include, but are not limited to:

- Significant change in product specifications or design without notification to the City,
- Failure to correct or replace products that are defective in manufacturing or workmanship,
- Repeated patterns of malfunction of a product not adequately corrected by vendor,
- Unreasonable pricing or timing of repair parts or repair work,
- Excessive delivery times for purchases.

Changes in standard specifications may also necessitate removal of specific products from the list. The product will be retained on the list if it is revised to meet the new criteria.

1. WASTEWATER PRODUCTS

CASING RUBBER END SEALS

	MODEL
Cascade Waterworks	CCES
CCI Pipeline Systems	ESW
PSI	W

(Section 3501.N.2.a)

CASING SPACERS

	MODEL
Cascade Waterworks	CCS (12" Width)
CCI Pipeline Systems	CSS12
PSI	S12G2

(Section 3501.N.2.a)

CONNECTION OF PIPES OF DISSIMILAR MATERIALS

	MODEL
Fernco	Strong Back Repair Coupling
Mission Rubber Company LLC	Flex-Seal Adjustable Repair Coupling
Total Piping Solutions Inc.	Hymax

(Section 3502.B.12)

EPOXY MANHOLE LINER

	MODEL
Citadel	SLS-30
Neopoxy	NPR-5300
Raven	405

(Section 3501.O.10.a)

JOINT SEALANT

BETWEEN JOINTS	MODEL
Press-Seal	EZ-STIK

(Section 3501.O.4.a)

EXTERIOR OF JOINTS	MODEL
Press-Seal	EZ-Wrap
Sealing Systems	Infi-Shield Gator Wrap

(Section 3501.O.4.b.i)

Canusa-CPS	WrapidSeal

(Section 3501.O.4.b.ii)

Sealing Systems Inc.	Infi-Shield Uni-Band

(Section 3501.O.4.b.iii)

MANHOLE CASTINGS

STANDARD 24" MANHOLE FRAME AND COVER **MODEL**
Lee's Summit Part Numbers
Frame: LS101A
Cover: LS101B
Clay & Bailey..... 2007MR, 2007
EJ..... 1502
R.B. Agarwalla & Co..... 2007-01-6000
Deeter 1320
(Section 3501.O.9, Standard Drawing SAN-2)

BOLT-DOWN MANHOLE FRAME AND COVER **MODEL**
Lee's Summit Part Numbers
Frame: LS102A
Cover: LS102B
Clay & Bailey..... 2014OR
(Section 3501.O.9, Standard Drawing SAN-2)

SLAB MANHOLE FRAME AND COVER **MODEL**
Lee's Summit Part Numbers
Frame: LS103A
Cover: LS103B
Clay & Bailey..... 2002, 2007
Deeter 1332
(Section 3501.O.9, Standard Drawing SAN-3)

SLAB BOLT-DOWN MANHOLE FRAME AND COVER **MODEL**
Lee's Summit Part Numbers
Frame: LS104A
Cover: LS104B
Clay & Bailey..... KCMO R4
(Section 3501.O.9, Standard Drawing SAN-3)

PIPE TO MANHOLE CONNECTORS

MODEL
A-Lok ..... Premium (12" and greater)
A-Lok ..... X-CEL (less than 12")
(Sections 3501.O.1.d, 3501.O.6, Standard Drawings SAN-2, SAN-3, SAN-4, SAN-5)
For new manholes

MODEL
Press Seal..... PSX Direct Drive
A-Lok G3
(Section 3502.B.11.b, Standard Drawing SAN-5) For existing manholes and core drilled openings through outside drop manholes.

POLYETHYLENE ENCASEMENT FILM

LINEAR LOW DENSITY 8MIL AWWA C105	**MODEL**
Sigma Corporation	8 mil Linear LDPE
AA Thread Seal Tape, Inc.	8 mil Linear LDPE

(Section 3501.D.5)

2. WATER PRODUCTS

CASING RUBBER END SEALS

	MODEL
Cascade Waterworks	CCES
CCI Pipeline Systems	ESW
PSI	Model W

(Section 3901.R.2)

CASING SPACERS

STAINLESS STEEL	**MODEL**
Cascade Waterworks	CCS
CCI Pipeline Systems	CSS12
PSI	S12G2

(Section 3901.R.2)

FIRE HYDRANTS

	MODEL
American AVK	Series 2700
Clow	Medallion
Kennedy	Guardian K-81D
Mueller	Super Centurian
Waterous	Pacer (WB-67-250)

(Section 3901.P)

GRATE 18" X 18"

	MODEL
Clay & Bailey	2157BG
Deeter	3203

(Standard Drawing WAT-12)

MANHOLE COVERS

TRAFFIC CONDITIONS	**MODEL**
Clay & Bailey	2002, 2007
Deeter	1332

(Standard Drawing WAT-12)

NON-TRAFFIC CONDITIONS	**MODEL**
Bilco	K-1

(Standard Drawings WAT-12)

FOR AIR RELEASE ASSEMBLY	MODEL
A. Y. McDonald	74M36
Ford	MC-36
(Standard Drawing WAT-10)	

POLYETHYLENE ENCASEMENT FILM

LINEAR LOW DENSITY 8MIL AWWA C105	MODEL
Sigma Corporation	8mil Linear LDPE
AA Thread Seat Tape, INC.	8mil Linear LDPE
(Section 3901.C.7)	

STEPS

	MODEL
M. A. Industries	PS-2-PF
American Step Co	ML-13-NCR
(3901.O.2.b, Standard Drawing WAT-12)	

TAPPING SLEEVES

IRON BODY	MODEL
American Flow Control	Series 2800
Mueller	H-615
Tyler/Union	25U
U.S. Pipe	T-9
(Section 3901.M.1)	

STAINLESS STEEL	MODEL
Cascade	Series CST-EX
Dresser	Style 630
Ford	Style FTSS
JCM	Model 432
Romac	SST-III
Smith-Blair	665
(Section 3901.M.2)	

VALVES

AIR RELEASE	MODEL
Val-Matic	Series 200
(Section 3901.L.4, Standard Drawing WAT-10)	

BUTTERFLY	MODEL
Henry Pratt	Groundhog, Class 150B
Mueller	Lineseal III
(Section 3901.L.2)	

GATE	MODEL
American Flow Control	Series 2500
Clow	Resilient Wedge Gate Valve

Kennedy	KS-FW
M&H	Style 4067, NRS
Mueller	2360 Series
U.S. Pipe	A-USPO Resilient Wedge Gate Valve
(Section 3901.L.3)	

VALVE BOXES

CAST IRON COVERS	**MODEL**
Clay & Bailey	2194
Clay & Bailey	2195
(Section 3901.N.)	

CAST IRON VALVE BOXES	**MODEL**
Clay & Bailey	5 ¼" (Screw Type) P1108
(Section 3901.N.)	

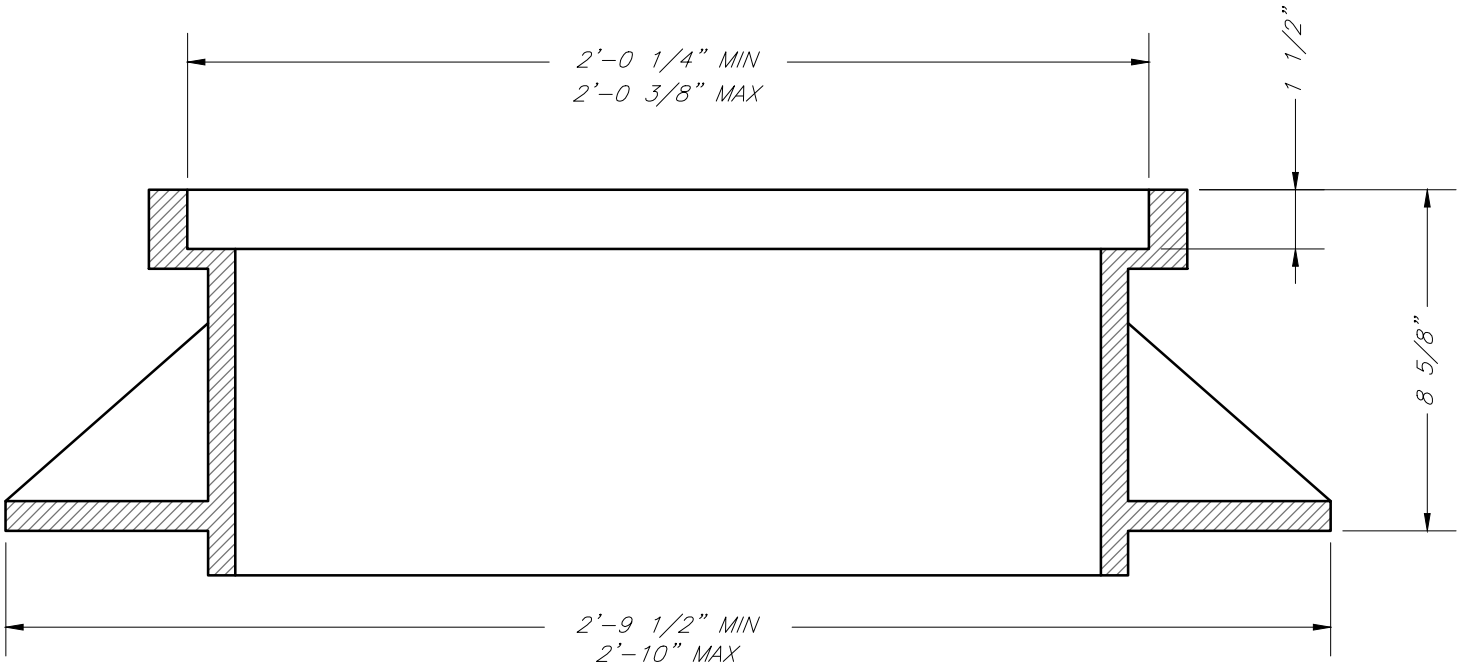

STANDARD 24" MANHOLE FRAME
LEE'S SUMMIT PART NO.: LS101A
MINIMUM WEIGHT = 250 LB
MATCHING COVER: LS101B

	CITY OF LEE'S SUMMIT, MO **PUBLIC WORKS DEPARTMENT** **ENGINEERING DIVISION**	Date: 09/16/04 Drawn By: JN Checked By: FILE: SANITARY SEWER-1
	STANDARD 24" MANHOLE FRAME	Rev: 01/04/07 Rev: 1/13

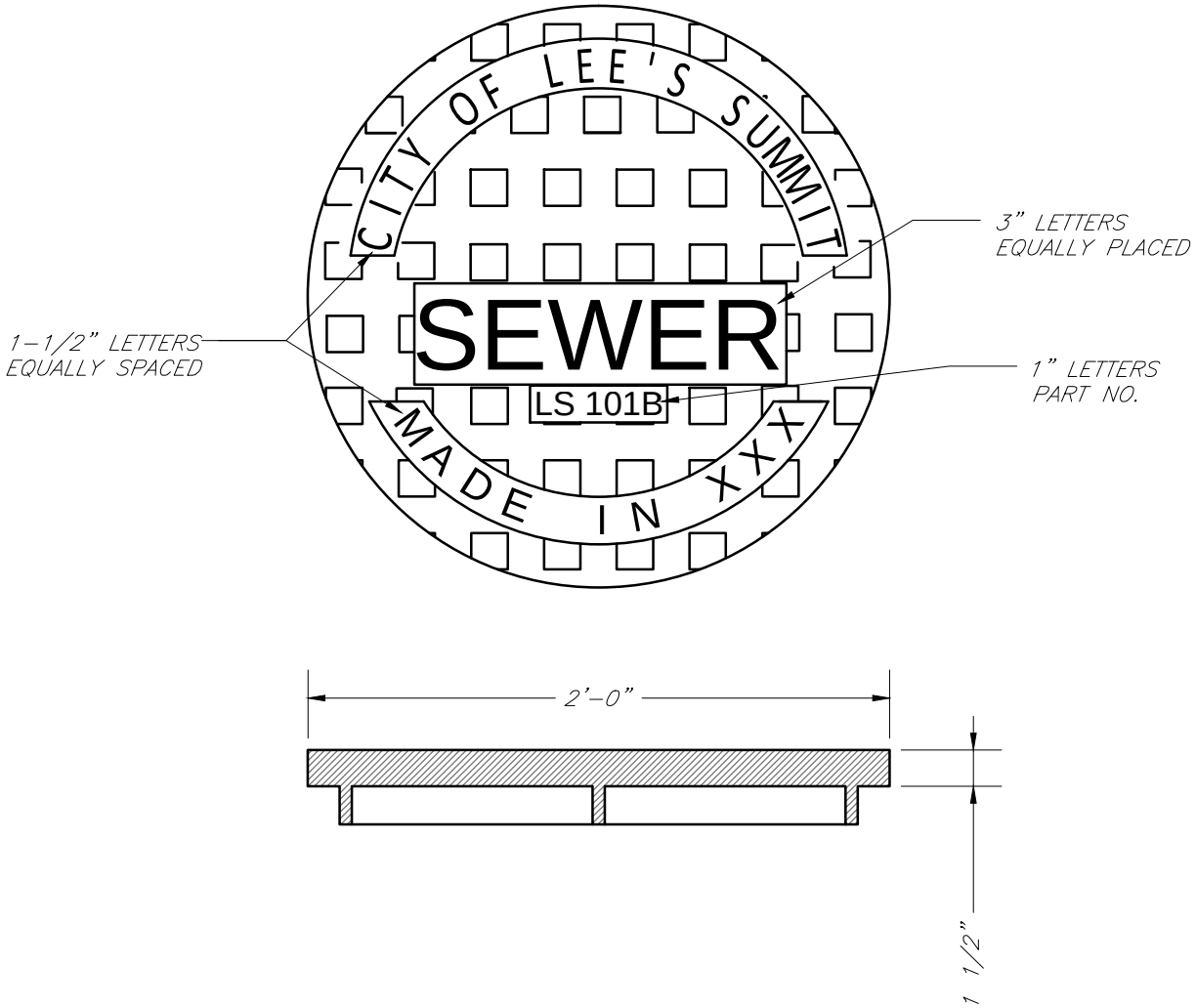

STANDARD 24" MANHOLE COVER
LEE'S SUMMIT PART NO: LS101B
MINIMUM WEIGHT = 160 LB
MATCHING FRAME: LS101A
NOTE: PICK HOLES NOT SHOWN

	CITY OF LEE'S SUMMIT, MO **PUBLIC WORKS DEPARTMENT** **ENGINEERING DIVISION**	Date: 09/16/04 Drawn By: JN Checked By: . FILE: SANITARY SEWER-2
	STANDARD 24" MANHOLE COVER	Rev: 04/05/07 Rev: 12/12

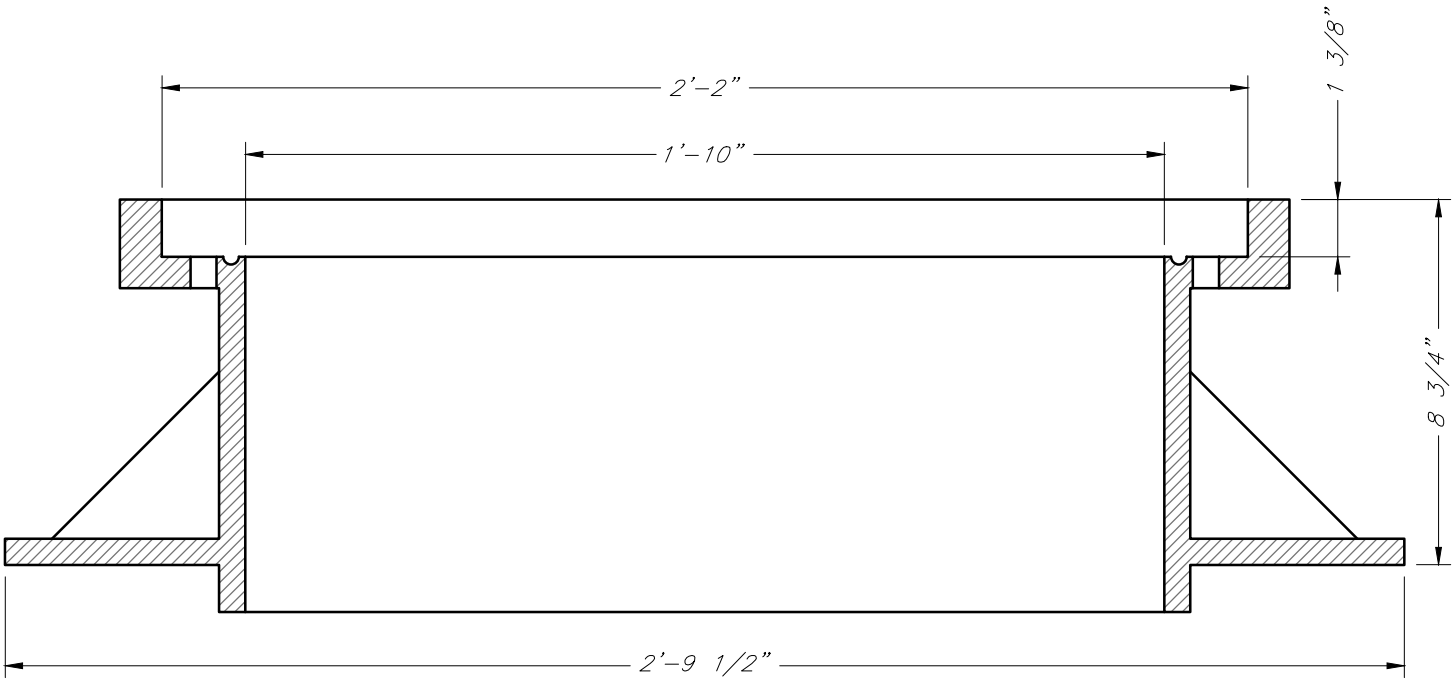

BOLT-DOWN MANHOLE FRAME
LEE'S SUMMIT PART NO. LS102A
MINIMUM WEIGHT = 250 LB
MATCHING COVER: LS102B

	CITY OF LEE'S SUMMIT, MO **PUBLIC WORKS DEPARTMENT** **ENGINEERING DIVISION**	Date: 09/16/04 Drawn By: JN Checked By: . FILE: SANITARY SEWER-3
	BOLT-DOWN MANHOLE FRAME	Rev: 04/05/07 Rev:

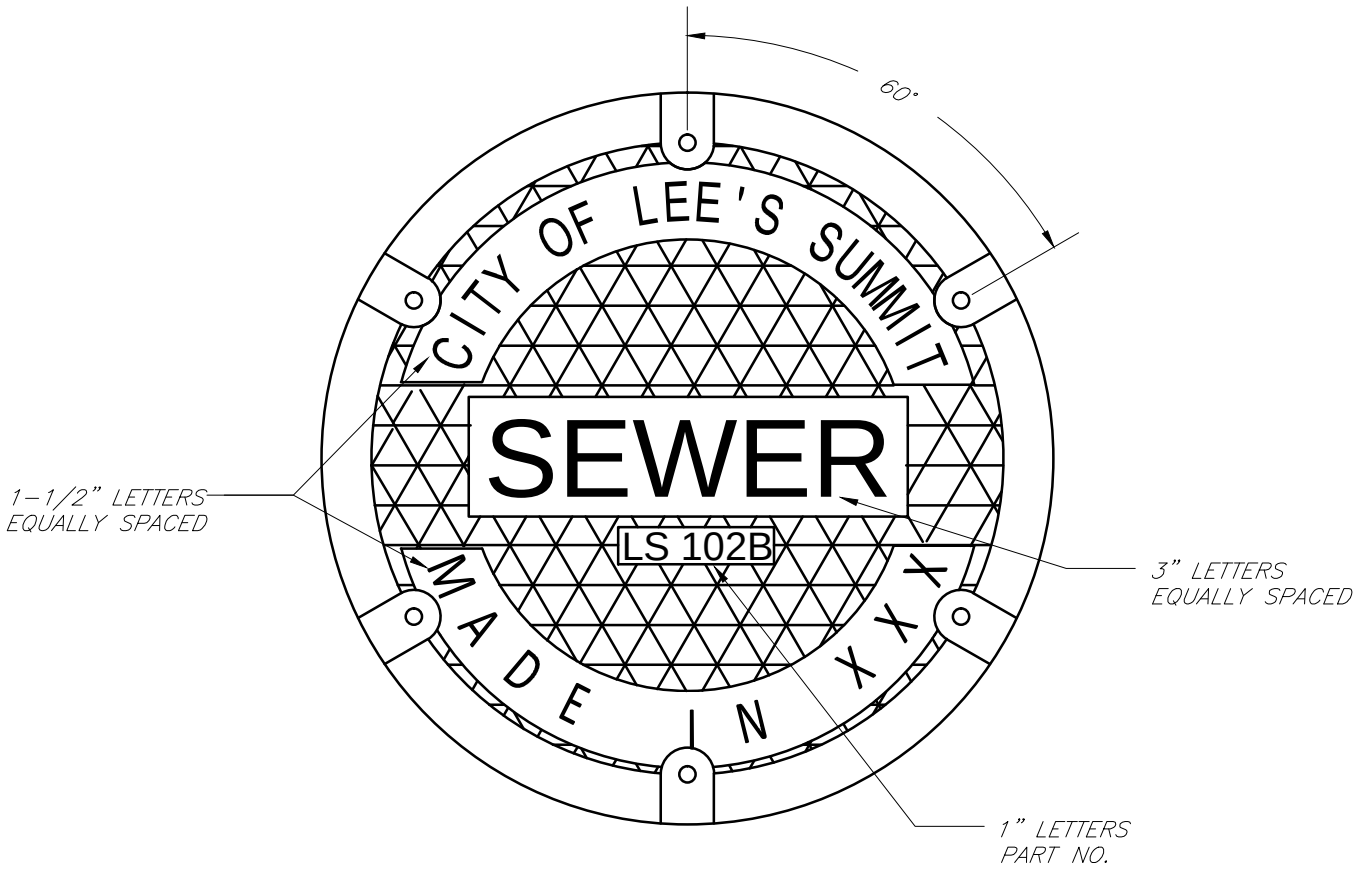

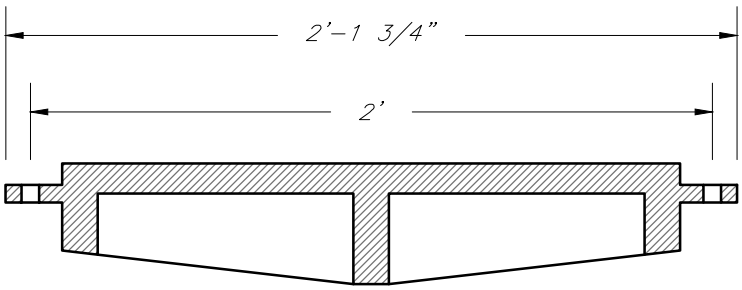

BOLT DOWN MANHOLE COVER
LEE'S SUMMIT PART NO.: LS102B
MINIMUM WEIGHT = 185 LB
MATCHING FRAME: LS102A
NOTE: PICK HOLES NOT SHOWN

	CITY OF LEE'S SUMMIT, MO **PUBLIC WORKS DEPARTMENT** **ENGINEERING DIVISION**	Date: 09/16/04 Drawn By: JN Checked By: . FILE: SANITARY SEWER-4
	BOLT-DOWN MANHOLE COVER	Rev: 04/05/07 Rev: 12/12

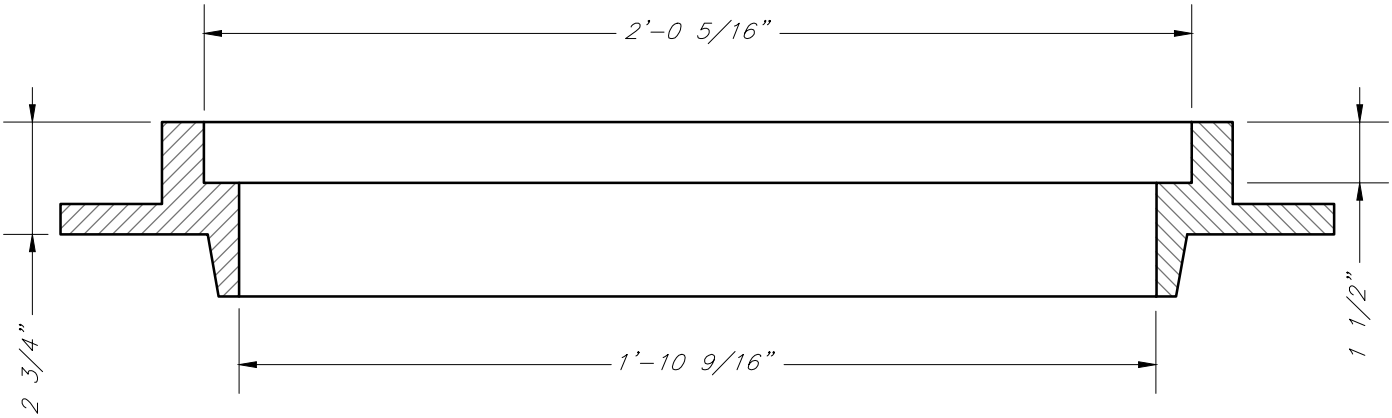

SLAB MANHOLE FRAME
LEE'S SUMMIT PART NO.: LS103A
MINIMUM WEIGHT = 145 LB
MATCHING COVER: LS103B

	CITY OF LEE'S SUMMIT, MO **PUBLIC WORKS DEPARTMENT** **ENGINEERING DIVISION**	Date: 09/16/04 Drawn By: JN Checked By: . FILE: SANITARY SEWER-5
	SLAB MANHOLE FRAME	Rev: 04/05/07 Rev: 12/12

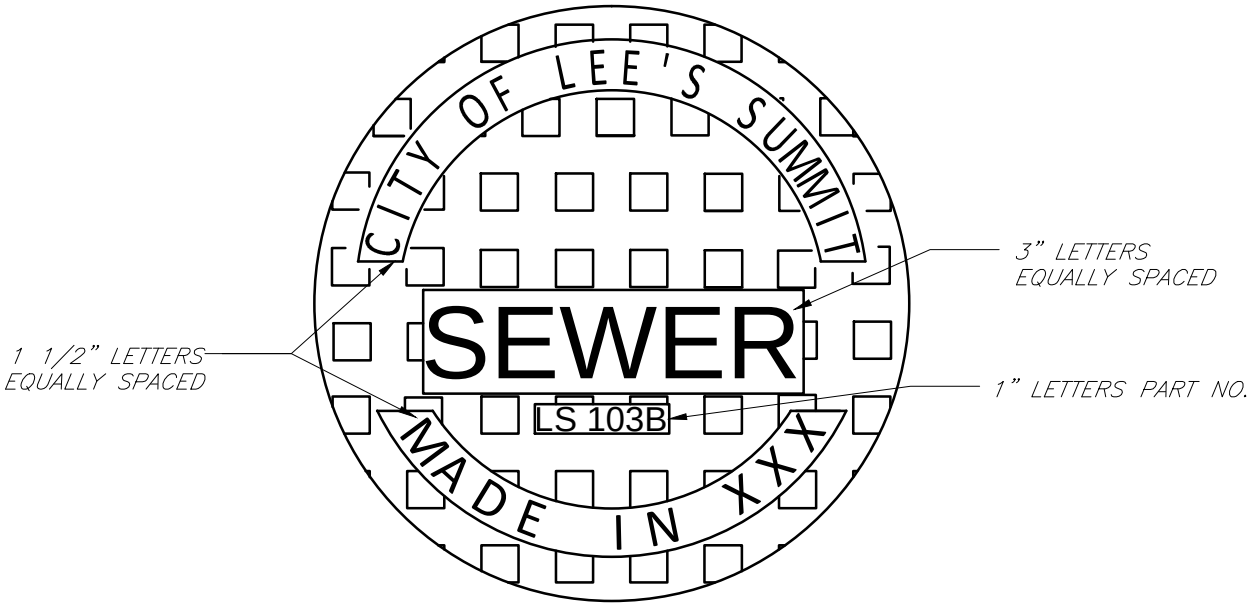

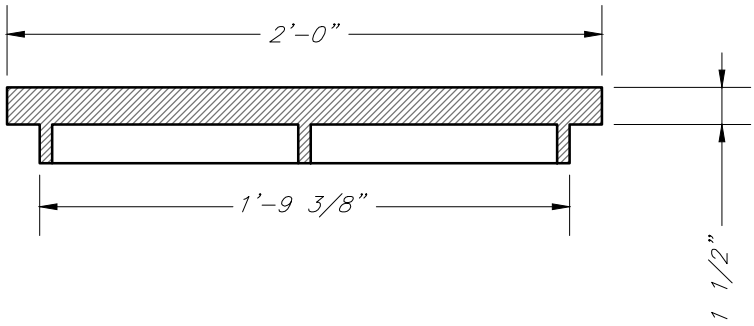

SLAB MANHOLE COVER
LEE'S SUMMIT PART NO.: LS103B
MINIMUM WEIGHT = 160 LB
MATCHING FRAME: LS103A
NOTE: PICK HOLES NOT SHOWN

	CITY OF LEE'S SUMMIT, MO **PUBLIC WORKS DEPARTMENT** **ENGINEERING DIVISION**	Date: 11/2012 Drawn By: JN Checked By: . FILE: SANITARY SEWER-6
	SLAB MANHOLE COVER	Rev: . Rev: .

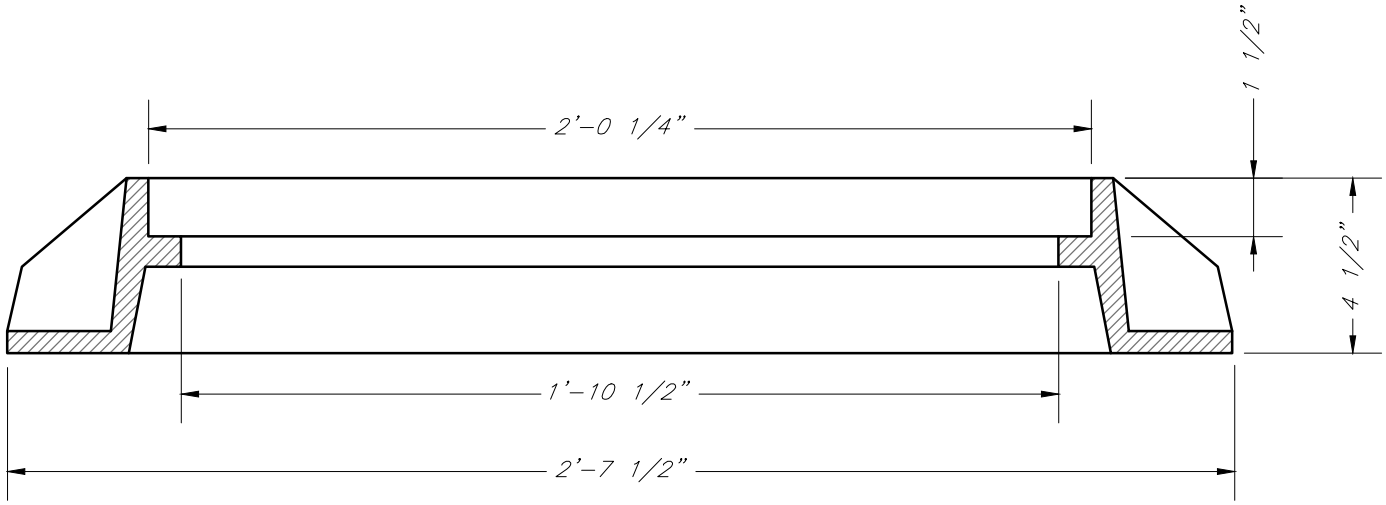

SLAB BOLT-DOWN MANHOLE FRAME
LEE'S SUMMIT PART NO.: LS104A
MINIMUM WEIGHT = 110 LB
MATCHING COVER: LS104B

	CITY OF LEE'S SUMMIT, MO **PUBLIC WORKS DEPARTMENT** **ENGINEERING DIVISION**	Date: 09/16/04 Drawn By: JN Checked By: . FILE: SANITARY SEWER-7
	SLAB BOLT-DOWN MANHOLE FRAME	Rev: 04/05/07 Rev: 10/12

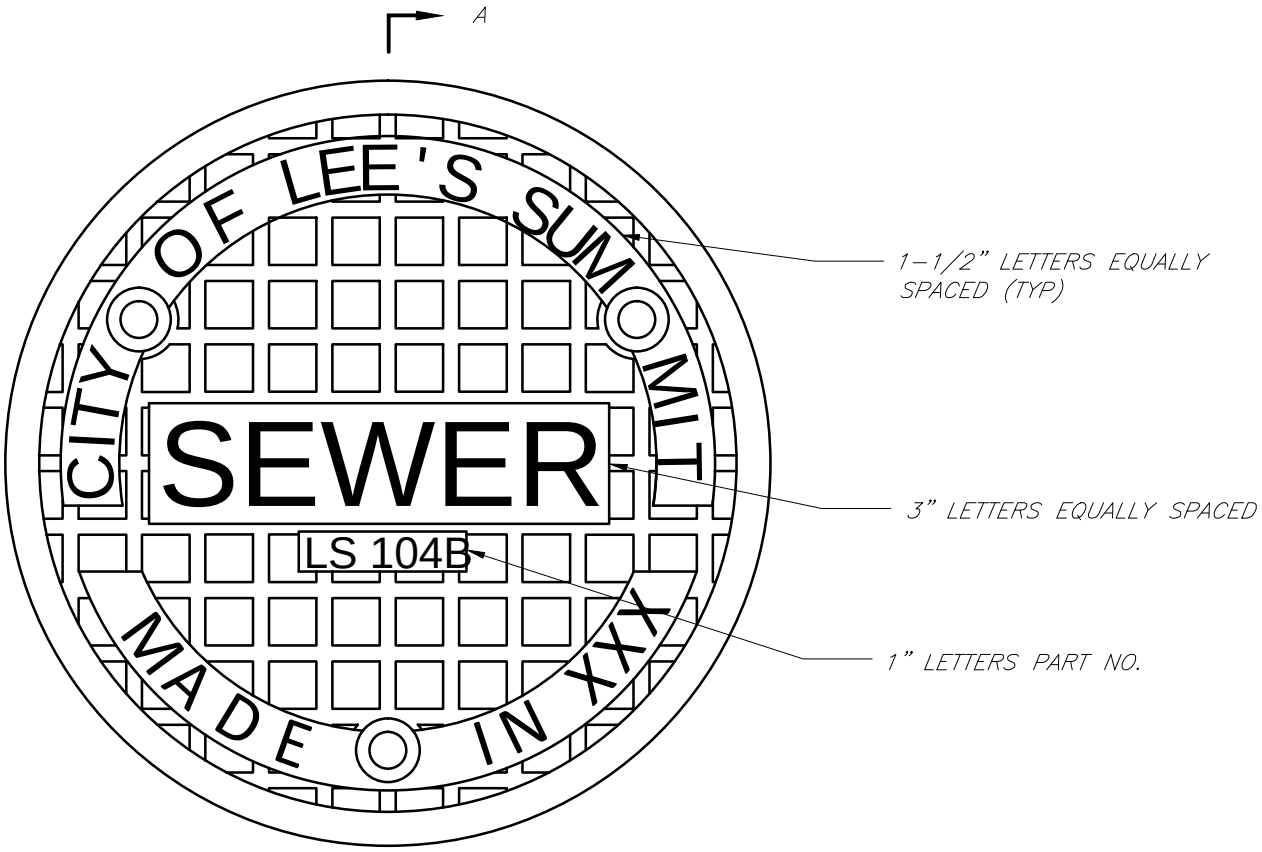

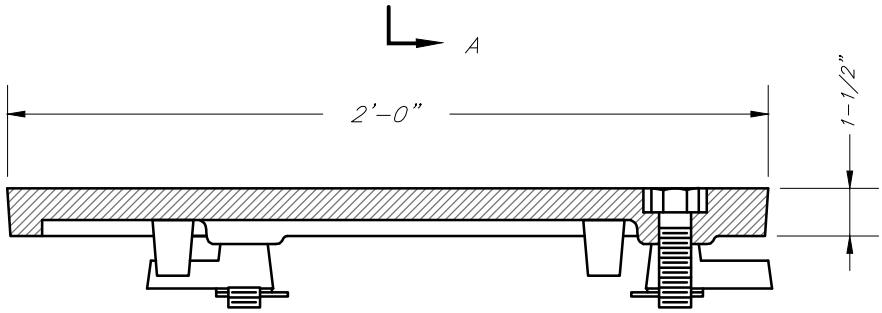

SECTION A-A

SLAB BOLT-DOWN MANHOLE COVER
LEE'S SUMMIT PART NO.: LS104B
MINIMUM WEIGHT = 140 LB
MATCHING FRAME: LS104A
NOTE: PICK HOLES NOT SHOWN

	CITY OF LEE'S SUMMIT, MO **PUBLIC WORKS DEPARTMENT** **ENGINEERING DIVISION**	Date: 10/12 Drawn By: JN Checked By: . FILE: SANITARY SEWER-8
	SLAB BOLT-DOWN MANHOLE COVER	Rev: Rev:

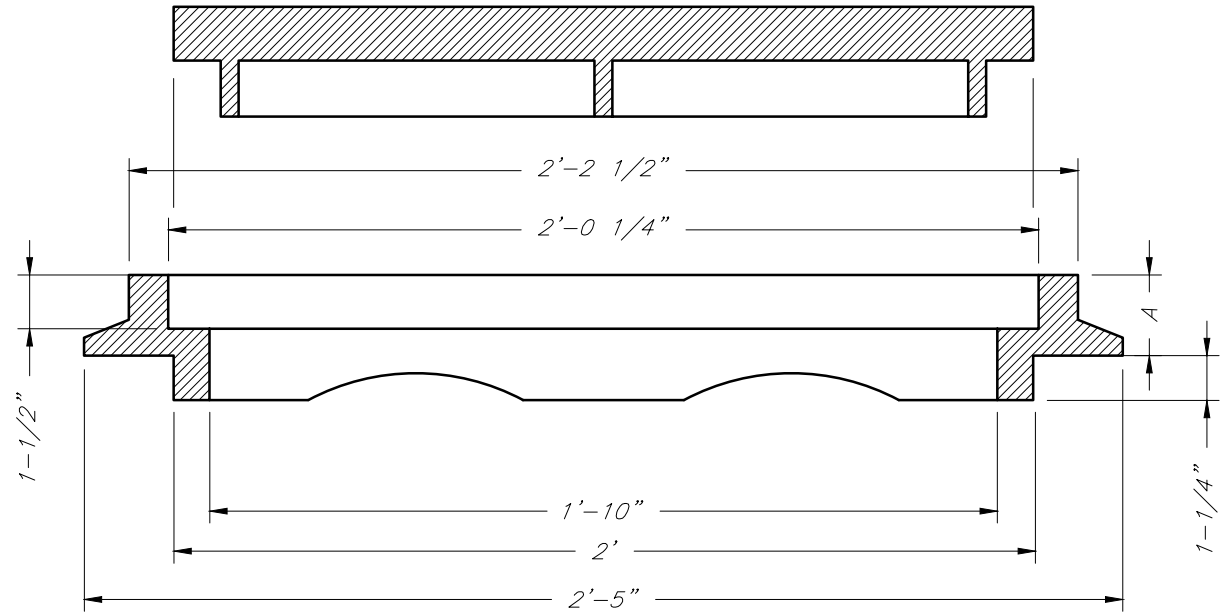

PART NUMBER	RISER HEIGHT	A	WEIGHT (LB)
LS106A	2"	3"	95
LS106B	2.5"	3.5"	119
LS106C	3"	4"	137
LS106D	3.5"	4.5"	155

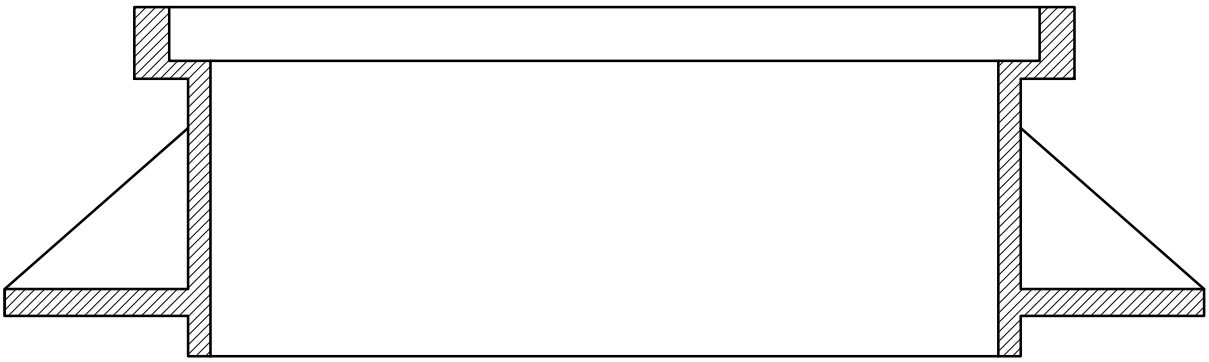

ADAPTER FOR 24" MANHOLE FRAME
MATCHING FRAME: LS101A
NOTE: PART NUMBERS AND WEIGHTS GIVEN IN TABLE ABOVE

CITY OF LEE'S SUMMIT, MO
PUBLIC WORKS DEPARTMENT
ENGINEERING DIVISION

ADAPTER FOR 24" MANHOLE FRAME

Date: 09/16/04
Drawn By: JN
Checked By: .
FILE: SANITARY SEWER-9
Rev: 06/22/07
Rev:

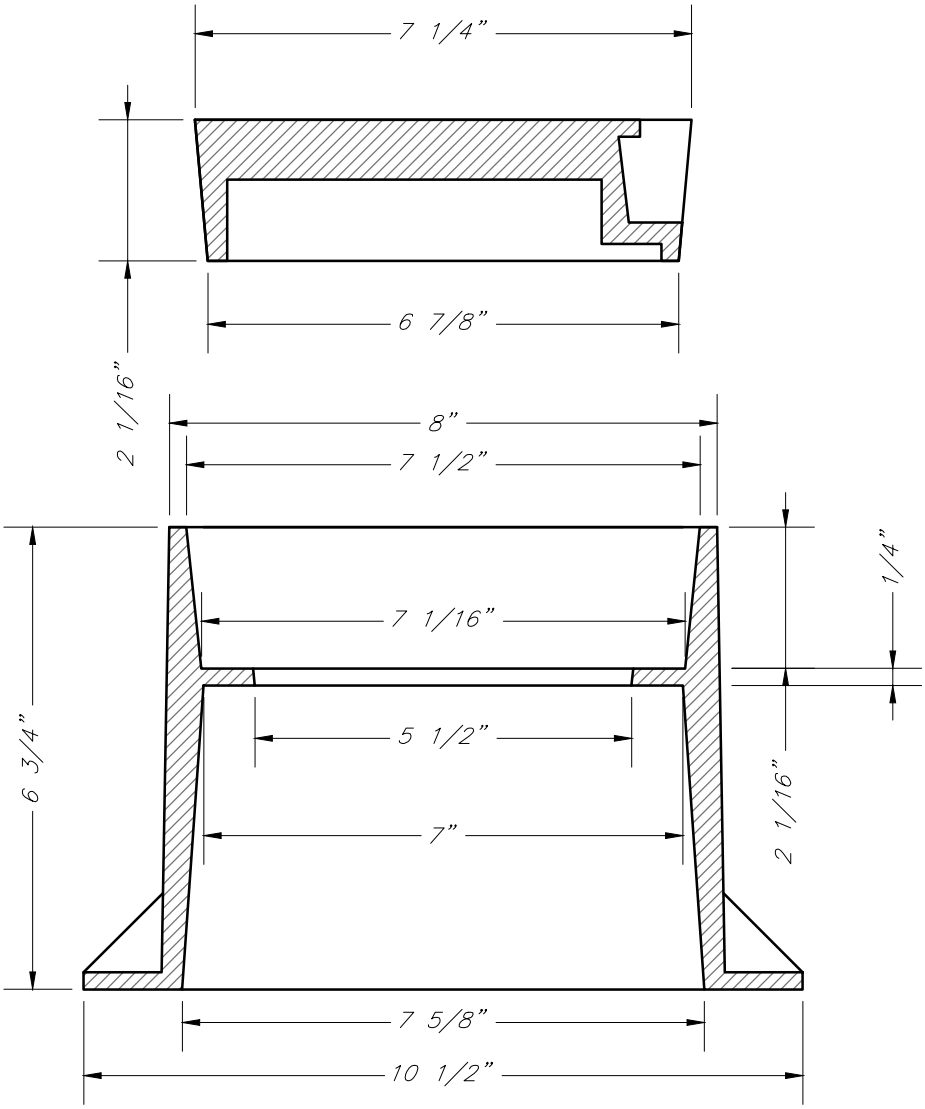

MINIMUM WEIGHT = 29 LB

	CITY OF LEE'S SUMMIT, MO **PUBLIC WORKS DEPARTMENT** **ENGINEERING DIVISION**	Date: 04/02/07 Drawn By: JN Checked By: . FILE: WATER-1
	VALVE COVER BOX & FRAME	Rev: Rev:

CITY OF LEE'S SUMMIT
PUBLIC WORKS DEPARTMENT
TRAFFIC ENGINEERING

APPROVED MATERIALS LIST FOR TRAFFIC SIGNALS

This document is provided as a benefit to contractors and suppliers who are performing work in the City of Lee's Summit. Only products identified on this list will be approved for installation on City traffic signal projects. This list shall not be used as a substitute for catalog cuts or material approval. This list is updated periodically. The models indicated on the list are approved, but are subject to final field inspection before acceptance.

The department may test new products and equipment for traffic signals. These new products may be installed on a traffic signal project or purchased on parts orders. Vendors may also submit items, at no cost to the City, for evaluation. Only a limited number of units will be accepted for evaluation until an item is added to the Approved Materials List. A vendor wishing to introduce a new product shall contact the City Traffic Engineer. Minor model changes do not require an evaluation, although the vendor shall submit specification sheets and a sample of the product for the City to inspect.

All equipment evaluations are coordinated through the City Traffic Engineer. The vendor supplying the equipment shall provide equipment specifications and a certification that the equipment meets and or exceeds City specifications before any testing is performed. The equipment may be tested for a period up to one-year, unless otherwise specified on the Approved Materials List. Products that are not performing satisfactorily will be replaced with an approved product if the vendor cannot provide timely correction of the problem or if unsatisfactory operation of the intersection results. In lieu of a testing period the vendor may supply proof of successful testing at other locations within the Kansas City metropolitan area.

If a vendor is proposing a product that does not meet City specifications, an explanation of why the product meets or exceeds the current specifications must be provided by the vendor in writing to the City Traffic Engineer. If approved, the product may be tested for the specified period as described above. If the product is satisfactory, the City will consider a revision to the applicable specifications. Products will not be added to the Approved Materials List that do not meet City specifications.

Products not performing as required or not supported by vendors or manufacturers are subject to removal form the Approved Materials List. Grounds for removal of products may include, but are not limited to:

- Significant change in product specifications or design without notification to the City,
- Failure to correct or replace products that are defective in manufacturing or workmanship,
- Repeated patterns of malfunction of a product not adequately corrected by vendor,
- Unreasonable pricing or timing of repair parts or repair work,
- Excessive delivery times for purchases.
- Removal from the Missouri Department of Transportation Approved Products List

Changes in standard specifications may also necessitate removal of specific products from the Approved Materials List. If this occurs, there will be a grace period where the product will be retained on the list after the specifications are changed and the product will be removed if it is not revised to meet the new criteria.

I. TRAFFIC SIGNAL EQUIPMENT

CONTROLLERS

NEMA TS1 CONTROLLERS	MODEL
Eagle	EPAC M52

NEMA ON-STREET MASTER CONTROLLER	MODEL
Eagle	MARC 360

CABINETS AND BACK PANELS

Note: Cabinets and Back Panels that meet City of Lee's Summit specifications from the following manufacturers will be accepted. All other manufacturers must provide a model that meets specifications and complete a satisfactory one-year evaluation as described above to be added to the list.

NEMA CABINET AND BACK PANEL ASSEMBLIES	MODEL
Siemens/Eagle	Meets Specifications

CONFLICT MONITORS

NEMA CONFLICT MONITORS	MODEL
Eberle Design Incorporated (EDI)	NSM-6
Eberle Design Incorporated (EDI)	NSM-12
Eberle Design Incorporated (EDI)	SSM-12LE
Power Distribution & Control (PDC)	CM82-03
Power Distribution & Control (PDC)	CM82-06
Power Distribution & Control (PDC)	CM82-12
Traffic Control Technologies (TCT)	LNM Series

CABINET ACCESSORIES

AUXILIARY TIME CLOCK	MODEL
Eltec	NTC-17E
Eltec	TC-14

EXTERNAL T.B.C. COORDINATORS	MODEL
Eltec	TC-14

FLASHERS (NEMA)	MODEL
Eberle Design Incorporated (EDI)	810
Power Distribution & Control (PDC)	SSF-86
Power Distribution & Control (PDC)	SSF-88

FLASH TRANSFER RELAYS	MODEL
AMECO	136-4962
Magnacraft	W21ACPX-2
Magnacraft	W21ACPXD-5

Mid-Tex 136-62T-3A1
Power Distribution & Control (PDC) ..... FTR 91

LOAD SWITCHES (NEMA) **MODEL**
Eberle Design Incorporated (EDI) 510
Power Distribution & Control (PDC) SSS-86
Power Distribution & Control (PDC) SSS-88
Traffic Control Technologies (TCT) SSS-86

SURGE PROTECTORS **MODEL**
Edco SHA-1210
Edco SHA-1250

SURRESTOR **MODEL**
Edco PC-642

TONE RECEIVERS **MODEL**
Iniven IR30M-05-30

TONE TRANSMITTERS **MODEL**

Iniven IT30

OPTICOM (DISCRIMINATOR) **MODEL**

3M (2-Channel Phase Selector) 752
3M (4-Channel Phase Selector) 754

DETECTION

MICROWAVE DETECTORS **MODEL**

Microwave Sensors TC-26B
Electronic Integrated Systems, Inc. (EIS) ..... RTMS X-2

MICROLOOP, PROBE **MODEL**

3M ..... Canoga 701

OPTICOM (EMERGENCY PREEMPTION)
3M (One-Way Detector) 721
3M (Two-Way Detector) 722

OPTICOM (EMERGENCY PREEMPTION) CARD RACK
3M 760

PEDESTRIAN PUSH BUTTONS **MODEL**

Pelco (Round Pole Mount) SE-2102-00
Pelco (Flat Mount) SE-2102-01

Polara Bull Dog (ADA Compliant)..... BDLM2-B/PBC-B

POWER SUPPLY FOR CARD RACK DETECTORS (NEMA) MODEL

Detector Systems..... 205
Eberle Design Incorporated (EDI)..... PS-150
ICC..... PS24
PGK PS-1.2

SINGLE CHANNEL SHELF MOUNT DETECTORS, STANDARD MODEL

Detector Systems..... 910
Eberle Design Incorporated (EDI)..... LM301
Sarasota..... 535B/MS

SINGLE CHANNEL SHELF MOUNT DETECTORS, TIME DELAY MODEL

Detector Systems..... 913
Eberle Design Incorporated (EDI)..... LM301T
Sarasota..... 535T/MS

ULTRASONIC DETECTORS MODEL

Microwave Sensors..... TC-30

VIDEO DETECTION SYSTEM MODEL

Iteris ..... Vantage Edge 2
Econolite ..... Autoscope 2020
Econolite ..... Autoscope Solo Terra
Econolite……..Autoscope RackVision
Econolite……..Autoscope RackVision Terra

VIDEO RACK
Siemens/Eagle..... VDR116

2-CHANNEL CARD RACK COUNTING
DETECTORS, DUAL OUTPUT MODEL

Eberle Design Incorporated (EDI)..... LM632

2-CHANNEL CARD RACK COUNTING
DETECTORS, SINGLE OUTPUT PULSE MODE (NEMA) MODEL

Eberle Design Incorporated (EDI)..... LM632t
ICC..... S27B
Reno A & E C

2-CHANNEL CARD RACK DETECTORS, STANDARD (NEMA) **MODEL**

Eberle Design Incorporated (EDI)..... LM602
ICC..... S27B
Reno A & E C
Reno A & E ..... G

2-CHANNEL CARD RACK DETECTORS, TIME DELAY (NEMA) **MODEL**

3M..... Canoga C800 Series
Eberle Design Incorporated (EDI)..... LM602T

PULL BOXES

PREFORMED CLASS 1 **MODEL**

STRAIGHT
Armorcast Products Company (Box & Lid) A6001640TAPCX22
Carson Industries (Box)..... H1730-24
Carson Industries (Lid) H1730-PI
Strongwell/Quazite (Box)..... PG1730B532
Strongwell/Quazite (Lid) PG1730H511
Strongwell/Quazite (Series) PG1730BA
Synertech (Box) S1730B24AA
Synertech (Lid) S1730HBB0A

FLARED
Armorcast Products Company (Box & Lid) A6001640TAX24
Associated Plastics/New Basis (Box & Lid) FCA173022CC4126-62
Associated Plastics/New Basis (Box & Lid) FCA173022CC4749-61
Associated Plastics/New Basis (Box & Lid) FCA173024CC40303
CDR (Box & Lid – Series)..... SA12-1730-22
Pencell Plastics (Box & Lid)..... PEM-1830-PCX

PREFORMED CLASS 2 **MODEL**

STRAIGHT
Armorcast Products Company (Box & Lid) A6001974TAPCX26
Armorcast Products Company (Box & Lid) A6001974TAPCX24
Carson Industries (Box)..... H2436-24
Carson Industries (Lid) H2436-PI
Strongwell/Quazite (Box) PG2436B539
Strongwell/Quazite (Lid) PG2436H508
Strongwell/Quazite (Series) PG2436BA
Synertech (Box) S2436B26AA
Synertech (Lid) S2436HCB0A

FLARED
Armorcast Products Company (Box & Lid) A6001974TAX26
Armorcast Products Company (Box & Lid) A6001974TAX24

Associated Plastics/New Basis (Box & Lid) FCA243630CC4126-61
Associated Plastics/New Basis (Box & Lid) FCA243630CC4749-61
Associated Plastics/New Basis (Box & Lid) FCA243624T
CDR (Box & Lid – Series)..... SA12-2436-24
Pencell Plastics (Box & Lid)..... PEM-2436-36
Pencell Plastics (Box & Lid) PEM-2436-PCX-24
Synertech (Box) S2436B24AA
Synertech (Lid) S2436HCB0A

PREFORMED CLASS 3 **MODEL**

STRAIGHT
Armorcast Products Company (Box & Lid) A6001430TAPCX36
Carson Industries (Box)..... H3048-36
Carson Industries (Lid) H3048-P1
Strongwell/Quazite (Box)..... PF3048B560
Strongwell/Quazite (Lid) PG3048H517
Strongwell/Quazite (Series) PG3048BA
Synertech (Box) S3048B36AA
Synertech (Lid) S3048HCB0A

FLARED
Armorcast Products Company (Box & Lid) A6001550TAX36
Associated Plastics/New Basis (Box & Lid) FCA304836EE4749-61
Associated Plastics/New Basis (Box & Lid) FCA304836EE40304
Associated Plastics/New Basis (Box & Lid) FCA304824T
CDR (Box & Lid - Series) SA12-3048-36W
Pencell Plastics (Box & Lid)..... PEM-3048-36-PCX-SPLIT

PREFORMED CLASS 5 **MODEL**

FLARED
Armorcast Products Company (Box & Lid) A6001466TA
Armorcast Products Company (Box & Lid) A6000172TAX36
CDR (Box & Lid)..... SA12-3000-36
New Basis (Box & Lid) FCA540036C4800

POSTS AND MAST ARMS

Note: Posts and Mast Arms do not require an evaluation period. Posts and Mast Arms shall be fabricated in accordance with City of Lee's Summit specifications and standards. Posts and Mast Arms shall be pre-approved as required by the City of Lee's Summit Standards and Specifications to be added to the list. The following manufacturers have pre-approved fabrication details. Posts and Mast Arms are subject to field inspection before acceptance.

STEEL POSTS AND MAST ARMS **MODEL**
Valmont Industries ..... Meets Specifications

PEDESTAL POSTS	MODEL
Pelco	PB-5102

PEDESTAL BASES	MODEL
Component Products	CPI-BAS-1
Pelco	PB5336
Pelco	PB5337
Pelco	PB5340
Pelco	PB5341
Traffic Parts	TP 289X

SIGNAL HEADS

BACKPLATES	MODEL
Gades Sales/Neodesia Plastics	BP Series
Pelco	BK-100x Series
Traffic Parts/Chapel Hill	44xx Series

LOUVERS	MODEL
Pelco	GPL

POLYCARBONATE SIDE-MOUNT BRACKETS WITH RELATED HARDWARE	MODEL
Component Products	Any
Eagle	UKS1452AB

SIGNAL HEADS - ALUMINUM CONVENTIONAL	MODEL
Automatic/Eagle	SIG Series
McCain	MTSA Series
Safetrans/IDC	ST Series
Traffic Control Technologies (TCT)	HSS Series

SIGNAL HEADS - ALUMINUM PEDESTRIAN	MODEL
Automatic/Eagle	SIG Series

SIGNAL HEADS - OPTICALLY LIMITED	MODEL
3M	HVS 131 Series
McCain	HPTS Series

SIGNAL HEADS - POLY CONVENTIONAL	MODEL
Chapel Hill	SIG-TPB-305-CTN-NVN-0N

Chapel Hill	SIG-TPB-586-CTN-NVN-0N
Siemens/Eagle	SA Series
General Traffic Equipment Corp	T-30 POLY
IDC/Safetrans	LT Series
McCain	MTSTP Series
Traffic Control Technologies (TCT)	PSS Series

PEDESTRIAN HEAD – POLY 1-SECTION	**MODEL**
McCain (clamshell mount left)	M32258L
McCain (clamshell mount right)	M32258R
McCain (side-of-pole mount)	M32258

PEDESTRIAN HEAD MOUNTING – CLAMSHELL	**MODEL**
McCain	P9050B

PEDESTRIAN LED SIGNAL INDICATION	**MODEL**
GE	PS7-CFF1-26A
Dialight	430-6473-001X
Leotek	TSL-PED-16-CIL-9

SIGNAL INDICATIONS

LIGHT EMITTING DIODES (LED)	**MODEL**
Dialight (Yellow Arrow)	431-3334-901XOD
Dialight (Green Arrow)	432-2324-001XOD
GE (Yellow Arrow)	DR6-YTAAN-17A-YX
GE (Green Arrow)	DR6-GTAAN-17A
Dialight (Red Ball)	433-1210-003XL
Dialight (Green Ball)	433-2220-001XL
Dialight (Yellow Ball)	433-3230-901XL
GE (Red Ball)	DR6-RTFB-17A
GE (Green Ball)	DR6-GTFB-17A-40
GE (Yellow Ball)	DR6-YTFB-17A-YX1
Leotek (Red Ball)	TSL-12R-LX-IL3-A1
Leotek (Green Ball)	TSL-12G-LX-IL3-A1
Leotek (Yellow Ball)	TSL-12Y-LX-IL3-A1

MISCELLANEOUS

CABLE	**MODEL**
Cable	Meets Specifications
Belden (Opticom Cable)	580461 - 138
3M (Opticom Cable)	M-138
Belden (Iteris Video Detection System)	8281
Isotec (Iteris Video Detection System)	X531787-00
Isotec (Iteris Video Detection System)	159PVCC-00

CONDUIT	MODEL
Conduit	Meets Specifications

HARDWARE/BRACKETS	MODEL
Pelco	Meets Specifications
Reliable 3/8” Strandvise	5202
Reliable ¼” Strandvise	5200

UTILITY ENCLOSURE PEDESTAL	MODEL
Meyers	Meets Specifications (No fused contactors)
Millbank	Meets Specifications (No fused contactors)
Pacific Utility Products (PUP)	USPA-MODOT

LOOP SEALANTS	MODEL
3M	5000
Bondo	560
Bondo	575
Bondo	P606
Chemque	290S
Chemque	296-06
Durant Paints	Stat-A-Flex Polyseal
RAI Products	Pro-Seal 6006

SPLICE KITS (DETECTOR LEAD-IN)	MODEL
3M	DBY Series
HOMAC HMC Industries	RAB 1/0 Series

BATTERY BACK-UP SYSTEM	MODEL
Alpha Technologies (UPS Power Module)	FXM1100
Alpha Technologies (By Pass Switch)	MBP
Alpha Technologies (Battery)	180-GXL-4
Alpha Technologies (Battery Enclosure)	BSM-4

INTERNALLY ILLUMINATED STREET NAME SIGNS	MODEL
Carmanah	Meets Specifications

CITY OF LEE'S SUMMIT
PUBLIC WORKS DEPARTMENT
TRAFFIC ENGINEERING

APPROVED MATERIALS LIST FOR STREET LIGHTING

This document is provided as a benefit to contractors and suppliers who are performing work in the City of Lee's Summit. All products identified on this list will be approved for installation on City street lighting projects. This list shall not be used as a substitute for catalog cuts or material approval. This list is updated periodically. The models indicated on the list are approved, but are subject to final field inspection before acceptance.

The department may test new products and equipment for street lighting. These new products may be installed on a street lighting project or purchased on parts orders. Vendors may also submit items, at no cost to the City, for evaluation. Only a limited number of units will be accepted for evaluation until an item is added to the Approved Materials List. A vendor wishing to introduce a new product shall contact the City Traffic Engineer. Minor model changes do not require an evaluation, although the vendor shall submit specification sheets and a sample of the product for the City to inspect.

All equipment evaluations are coordinated through the City Traffic Engineer. The vendor supplying the equipment shall provide equipment specifications and a certification that the equipment meets and or exceeds City specifications before any testing is performed. The equipment may be tested for a period up to one-year, unless otherwise specified on the Approved Materials List. Products that are not performing satisfactorily will be replaced with an approved product if the vendor cannot provide timely correction of the problem or if unsatisfactory operation of the intersection results. In lieu of a testing period the vendor may supply proof of successful testing at other locations within the Kansas City metropolitan area.

If a vendor is proposing a product that does not meet City specifications, an explanation of why the product meets or exceeds the current specifications must be provided by the vendor in writing to the City Traffic Engineer. If approved, the product may be tested for the specified period as described above. If the product is satisfactory, the City will consider a revision to the applicable specifications. Products will not be added to the Approved Materials List that do not meet City specifications.

Products not performing as required or not supported by vendors or manufacturers are subject to removal form the Approved Materials List. Grounds for removal of products may include, but are not limited to:

- Significant change in product specifications or design without notification to the City,
- Failure to correct or replace products that are defective in manufacturing or workmanship,
- Repeated patterns of malfunction of a product not adequately corrected by vendor,
- Unreasonable pricing or timing of repair parts or repair work,
- Excessive delivery times for purchases.

Changes in standard specifications may also necessitate removal of specific products from the Approved Materials List. If this occurs, there will be a grace period where the product will be retained on the list after the specifications are changed and the product will be removed if it is not revised to meet the new criteria.

STREET LIGHTING EQUIPMENT

BASES

TYPE B14 SCREW-IN ANCHORS	MODEL
JH Botts	Drawing No. JHBOPK-1, Type P

TYPE B40S SCREW-IN ANCHORS	MODEL
AB Chance	T112-0293 0101
JH Botts	Drawing No. JHBOPK-1, Type F1

TYPE B40D SCREW-IN ANCHORS	MODEL
AB Chance	T112-02940101
JH Botts	Drawing No. JHBOPK-1, Type F2

STREET LIGHT POLES

TYPE P40S	MODEL
Hapco	B12927 40 MH
Valmont	Drawing No. DR7010; Type P40S

TYPE P40D	MODEL
Hapco	B12928 40 MH
Valmont	Drawing No. DR7010; Type P40D

BREAK-AWAY BASES	MODEL
Akron Foundry 11”	TB6-9” Drawing No. A79402
Akron Foundry 15”	TB5-9” Drawing No. A79236
Valmont 11”	08R115125P09
Valmont 15”	10R145153B09

LUMINAIRES

150 WATT COBRA-HEAD LUMINAIRES	MODEL
General Electric (GE)	M2AC15S0A1GMC31

150 WATT POST-TOP LUMINAIRES	MODEL
Cooper Lighting	MPB15SW433U2

175 WATT WALLMOUNT LUMINAIRES	MODEL
General Electric (GE)	WM7M15S0A1SN4DB

250 WATT COBRA-HEAD LUMINAIRES	MODEL
American Electric Lighting (AEL)	325 25S CA MT2 R3 FG NR OP
Cooper Lighting	OVF25SWV3D
General Electric (GE)	MDCA25S0A12FMC31

400 WATT COBRA-HEAD LUMINAIRES	MODEL
American Electric Lighting (AEL)	325 40S CA MT2 R3 FG NR OP
Cooper Lighting	OVF40SWV3D

General Electric (GE) MDCA40S0A12FMC31

LAMPS

250 WATT LAMPS	MODEL
General Electric (GE)	Lucalox 44047
Radiant	LU 250/MOG/ENV
Sylvania	Lumalux LU250/ECO-67578

400 WATT LAMPS	MODEL
General Electric (GE)	Lucalox 44054
Radiant	LU 400/MOG/ENV
Sylvania	Lumalux LU400/ECO-67533

CONDUIT

2” HDPE CONDUIT	MODEL
ARNCO	Perma-Guard/UL
Carlon	A13C6NENNA
Dura-Line	Smooth Solid Wall SDR11

2” PVC CONDUIT	MODEL
Cantex	A52CA12
Carlon	49011

2” PVC FITTINGS	MODEL
Cantex (90° Elbow)	5133828
Cantex (Coupling)	6141628
Carlon (90° Elbow)	UA9AJ
Carlon (Coupling)	E940J

2 ½” PVC CONDUIT	MODEL
Allied	8110
Cantex	A52CE12
Carlon	49012

2 ½” PVC FITTINGS	MODEL
Cantex (90° Elbow)	5133829
Cantex (Coupling)	6141629
Carlon (90° Elbow)	UA9FK
Carlon (Coupling)	E940K

HDPE TO PVC COUPLING	MODEL
Comfit Corp.	Comfit Coupling
ETCO Specialty Products	E-Loc Coupling
Tyco Electronics	MOON-Link Coupling

2” GRS Conduit	MODEL
Wheatland Tube Co.	RMC-Steel

CABLE

DISTRIBUTION CABLE	MODEL
Cerrowire	120-4X00
Draka Cableteq USA	RHH/RHW-2/USE-2 Copper
Service Wire Co.	RHH/RHW-2 Copper
Southwire	CU-RHH/RHW/USE

POLE AND BRACKET CABLE	MODEL
Cerrowire	112-3810
Service Wire Co.	THHN Copper #10
Southwire	CU-THHN #10

GROUND CABLE	MODEL
Cerrowire	050-2215
Service Wire Co.	#6 Bare Solid Soft Drawn Copper
Southwire	#6 Bare Solid Soft Drawn Copper

PULL AND JUNCTION BOXES

TYPE 1 JUNCTION BOXES	MODEL
Armorcast Products Company (Box & Lid)	A6001423ATAPC
CDR	A23-1212-12
New Basis (Box & Lid)	PMA121212SN
Quazite (Straight Box)	PC1212BA12
Quazite (Flared Box)	LX1212BA24
Quazite (Lid)	PC1212HA0041

TYPE 2 JUNCTION BOXES	MODEL
Armorcast Products Company (Box & Lid)	A6001425TAPC
CDR	A23-1118-12
New Basis (Box & Lid)	PCA111812SN
Quazite (Box)	PG1118BA12
Quazite (Lid)	PG1118HA0041

CLASS 1 PULL BOXES	MODEL
Armorcast Products Company (Box & Lid)	A6001640TAPCX22
CDR	A22-1730-22
New Basis (Box & Lid)	PCA173022SN
Quazite (Box)	PG1730BA22
Quazite (Lid)	PG1730HA0041

POWER SUPPLIES AND COMPONENTS

1-CIRCUIT POWER SUPPLIES	MODEL
Myers Power Products	(without fused contactors)
Pacific Utility Products (PUP)	USPA-100-100-MODOT (without fused contactors)

4-CIRCUIT POWER SUPPLIES	MODEL
Millbank	CP3B51C15AAOLSMO (without fused contactors)
Myers Power Products	MEUG16A-M100-LEES (without fused contactors)

Pacific Utility Products (PUP) ..... USP16-M2100-112C-MODOT (without fused contactors)

PHOTOELECTRIC CELLS	MODEL
American Electric Lighting (AEL)	DPR124-2.6-TJBK
Area Lighting Research (ALR)	2190-NP3
Area Lighting Research (ALR)	SST-PV-IES

GROUNDING EQUIPMENT

GROUND RODS	MODEL
Erico	Copperbonded ground rods
Hubbell Power Systems, Inc	Copper bonded ground rods
Knight	Copperbond rods

GROUND ROD CLAMPS	MODEL
Burndy	YGHP-C
Burndy	GRC
Erico	HDC
ITT Blackburn	JAB

MISCELLANEOUS

BREAK-AWAY CONNECTORS	MODEL
Bussman (Fused)	HEB-JW-RYC
Bussman (Non-Fused)	HET-JW-RYC
Littlefuse (Fused)	LEC-JYC-S
Littlefuse (Non-Fused)	LET-JYC-S

FUSES	
Bussman	KTK-8
Ferraz Shawmut	ATM-8
Littlefuse	KLK-8

SPLICES	MODEL
3M (Resin splice kit)	Scotchcast 90-B1
ITT Blackburn (Split bolt)	1HPS